BRITISH STANDARD

BS ISO 14837-1:2005

Mechanical vibration — Ground-borne noise and vibration arising from rail systems —

Part 1: General guidance

ICS 17.160; 45.080; 93.060

NO COPYING WITHOUT BSI PERMISSION EXCEPT AS PERMITTED BY COPYRIGHT LAW

Document Sharing Hub
British Standards

Full document details: BS ISO 14837-1:2005

National foreword

This British Standard reproduces verbatim ISO 14837-1:2005 and implements it as the UK national standard.

The UK participation in its preparation was entrusted by Technical Committee GME/21, Mechanical vibration and shock, to Subcommittee GME/21/3, Measurement and evaluation of mechanical vibration and shock, which has the responsibility to:

— aid enquirers to understand the text;

— present to the responsible international/European committee any enquiries on the interpretation, or proposals for change, and keep UK interests informed;

— monitor related international and European developments and promulgate them in the UK.

A list of organizations represented on this subcommittee can be obtained on request to its secretary.

Cross-references

The British Standards which implement international publications referred to in this document may be found in the *BSI Catalogue* under the section entitled "International Standards Correspondence Index", or by using the "Search" facility of the *BSI Electronic Catalogue* or of British Standards Online.

This publication does not purport to include all the necessary provisions of a contract. Users are responsible for its correct application.

Compliance with a British Standard does not of itself confer immunity from legal obligations.

Summary of pages

This document comprises a front cover, an inside front cover, the ISO title page, pages ii to vi, pages 1 to 45 and a back cover.

The BSI copyright notice displayed in this document indicates when the document was last issued.

Amendments issued since publication

Amd. No.	Date	Comments

This British Standard was published under the authority of the Standards Policy and Strategy Committee on 3 October 2005

© BSI 3 October 2005

ISBN 0 580 46574 8

Documents
Document Sharing Hub

Full document details: BS ISO 14837-1:2005

INTERNATIONAL STANDARD

ISO 14837-1

First edition
2005-07-15

Mechanical vibration — Ground-borne noise and vibration arising from rail systems —

Part 1: General guidance

Vibrations mécaniques — Vibrations et bruits initiés au sol dus à des lignes ferroviaires —

Partie 1: Directives générales

Reference number
ISO 14837-1:2005(E)

Documents
Document Sharing Hub

Full document details: BS ISO 14837-1:2005

Documents
Document Sharing Hub

Full document details: BS ISO 14837-1:2005

Contents

Page

Foreword ... iv

Introduction ... v

1 Scope ... 1

2 Normative references ... 1

3 Terms and definitions ... 1

4 Overview of ground-borne vibration and ground-borne noise ... 3
4.1 Circumstances of interest ... 3
4.2 Source of ground-borne vibration and ground-borne noise ... 3
4.3 Propagation ... 8
4.4 Receiver ... 8

5 Effects of ground-borne vibration and ground-borne noise ... 9
5.1 General ... 9
5.2 Perception of ground-borne vibration (1 Hz to 80 Hz) ... 9
5.3 Perception of ground-borne noise (16 Hz to 250 Hz) ... 9
5.4 Effect on buildings (1 Hz to 500 Hz) ... 9
5.5 Effect on very sensitive equipment and sensitive tasks (*circa* 1 Hz to 200 Hz) ... 10

6 Metrics ... 10
6.1 General ... 10
6.2 Perception of ground-borne vibration ... 10
6.3 Perception of ground-borne noise ... 11
6.4 Effects on buildings ... 11
6.5 Effects on very sensitive equipment ... 12

7 Ground-borne noise and vibration measurements ... 12
7.1 Equipment (instrumentation chain) ... 12
7.2 Measurement locations ... 13
7.3 Data to be acquired ... 13
7.4 Data analysis ... 13
7.5 Measurement report ... 14

8 Concept of models ... 14
8.1 Model development ... 14
8.2 Stages of assessment ... 15

9 Prediction models ... 20
9.1 General ... 20
9.2 Parametric models ... 21
9.3 Empirical models ... 22
9.4 Semi-empirical models ... 24

10 Development, calibration, validation and verification ... 24

Annex A (informative) Checklist of issues relevant to modelling and measurement ... 26

Annex B (informative) Mitigation of ground-borne vibration and ground-borne noise ... 32

Annex C (informative) Process and tools for development, calibration, validation and verification ... 39

Bibliography ... 44

Documents
Document Sharing Hub

Full document details: BS ISO 14837-1:2005

Foreword

ISO (the International Organization for Standardization) is a worldwide federation of national standards bodies (ISO member bodies). The work of preparing International Standards is normally carried out through ISO technical committees. Each member body interested in a subject for which a technical committee has been established has the right to be represented on that committee. International organizations, governmental and non-governmental, in liaison with ISO, also take part in the work. ISO collaborates closely with the International Electrotechnical Commission (IEC) on all matters of electrotechnical standardization.

International Standards are drafted in accordance with the rules given in the ISO/IEC Directives, Part 2.

The main task of technical committees is to prepare International Standards. Draft International Standards adopted by the technical committees are circulated to the member bodies for voting. Publication as an International Standard requires approval by at least 75 % of the member bodies casting a vote.

Attention is drawn to the possibility that some of the elements of this document may be the subject of patent rights. ISO shall not be held responsible for identifying any or all such patent rights.

ISO 14837-1 was prepared by Technical Committee ISO/TC 108, *Mechanical vibration and shock*, Subcommittee SC 2, *Measurement and evaluation of mechanical vibration and shock as applied to machines, vehicles and structures*.

ISO 14837 consists of the following parts, under the general title *Mechanical vibration — Ground-borne noise and vibration arising from rail systems*:

— *Part 1: General guidance*

The following parts are under preparation:

— *Part 2: Prediction models*

— *Part 3: Measurement*

— *Part 4: Evaluation criteria*

— *Part 5: Mitigation*

— *Part 6: Asset management*

Documents
Document Sharing Hub

Full document details: BS ISO 14837-1:2005

Introduction

Many if not all ground transportation systems can give rise to ground-borne vibration and/or ground-borne noise. Railways are by far the most common and significant source as a consequence of running steel wheels over steel rail.

Rail systems of all types generate ground-borne vibration and/or ground-borne noise, which (especially in urban settings) can have an undesirable environmental impact. An assessment of the likely ground vibration and response of structures at different distances from the source may be required. This requirement may arise for planning purposes where

a) a new or extended railway or new or altered buildings are proposed,

b) changes in dynamic characteristics of track or dynamic characteristics of trains are proposed,

c) a change in train operations is proposed (e.g. change of total length, speed, service pattern), or

d) assistance is needed in the evaluation of vibration mitigation measures.

Appropriate prediction of ground-borne vibration and/or ground-borne noise is the first of the two essential blocks required to assess vibration effects of new or modified rail systems on existing buildings, or the effects on new buildings next to or over existing rail systems. Ground-borne vibration and/or ground-borne noise criteria (and/or limit values) in the receiving building are the second block of any assessment. Criteria and limit values, however, are covered by national standards and other International Standards.

Prediction of ground-borne vibration and/or ground-borne noise from rail systems is a complex and developing technical field. This part of ISO 14837 provides guidelines on the essential considerations associated with developing prediction models to ensure that they are “fit for purpose” and that they are consistent in their approach.

Guidance is given on calibrating and validating a model and verifying its implementation, which are vital steps in quantifying and improving the model’s accuracy.

Table 1 shows in outline the stages to be observed for new or modified rail systems or building developments alongside rail systems. This part of ISO 14837 provides general introduction and guidance. Detailed matters will be covered in future parts, the titles of which are given in the Foreword.

Documents
Document Sharing Hub

Full document details: BS ISO 14837-1:2005

Table 1 — Outline of stages and the appropriate parts of ISO 14837

1. Approach dependent upon: New build, refurbishment or adjacent development (Part 1) Design stage (concept, preliminary, detail) (Part 1)
2. Evaluation criteria Use national standards and/or Part 4 Define assessment location(s) and metric(s)
3. Parameters affecting situation Identify relevant parameters (check list in Part 1) Gather parameter data
4. Measurements Acquire site-specific information using metric(s) defined by criteria (Part 3 and Part 4) Evaluation of model parameters Develop and or validate prediction model Evaluate mitigation performance
5. Predictions Use metric defined by criteria (Part 4) Use appropriate model in the design stage (Part 1 and Part 2) Ensure validation and define accuracy (Part 1)
6. Assessment Compare predictions against criteria Identify reason(s) for exceeding criteria
7. Mitigation Identify mitigation options (Part 1, Part 5 and Part 6) Assess whether mitigation options are reasonably practicable Carry out cost/benefit analysis
8. Solution Develop detail design Implement solution
9. Asset management Implement a programme of condition monitoring and maintenance to observe criteria (Part 5, Part 6)

Documents
Document Sharing Hub
Full document details: BS ISO 14837-1:2005

Mechanical vibration — Ground-borne noise and vibration arising from rail systems —

Part 1:
General guidance

1 Scope

This part of ISO 14837 provides general guidance on ground-borne vibration generated by the operation of rail systems, and the resultant ground-borne noise in buildings.

It lists the factors and parameters that need to be taken into consideration and offers guidance on prediction methods appropriate for a range of circumstances (e.g. to support the assessment of effects on human occupants and sensitive equipment or operations inside the buildings in addition to the predictions required to assess the risk of damage to building structures).

Attention is paid in this part of ISO 14837 to

— characteristics of the source: emission (e.g. train, wheel, rail, track, supporting infrastructure),

— propagation path: transmission (e.g. ground condition, distance), and

— receiving structures: immission: (e.g. foundations, form of building construction).

The guidance covers all forms of wheel and rail systems, from light-rail to high-speed trains and freight. This part of ISO 14837 provides guidance for rail systems at-grade, on elevated structures and in tunnels.

This part of ISO 14837 does not deal with vibration arising from the construction and maintenance of the rail system. It does not deal with airborne noise. Structure-radiated noise from elevated structures, which can have a significant environmental impact, is also excluded.

2 Normative references

The following referenced documents are indispensable for the application of this document. For dated references, only the edition cited applies. For undated references, the latest edition of the referenced document (including any amendments) applies.

ISO 2041, *Vibration and shock — Vocabulary*

3 Terms and definitions

For the purpose of this document, the terms and definitions given in ISO 2041 apply, together with the following.

3.1
ground-borne vibration
vibration generated from the pass-by of vehicle on rail, propagated through the ground or structure into a receiving building

Documents
Document Sharing Hub

Full document details: BS ISO 14837-1:2005

3.2
ground-borne noise
noise generated inside a building by ground-borne vibration generated from the pass-by of vehicle on rail

NOTE 1 Ground-borne noise is sometimes also referred to as re-radiated noise, structure-borne noise and solid-borne noise.

NOTE 2 Ground-borne noise excludes direct airborne noise.

3.3
model parameter
factor or function describing the physical behaviour of a mechanical element (property) in a mathematical model

3.4
model component
principal (fundamental) element of the whole physical system

3.5
model development
drafting a model of a physical structure

NOTE The model development is an iterative process through which a parameter, component or the whole model is modified to provide better agreement between predicted and measured values.

3.6
model calibration
calibration function(s) which are evaluated to ensure agreement between the model output and measured data

3.7
model validation
comparison between the output of the calibrated model and the measured data, independent of the data set used for calibration

3.8
model verification
confirmation that the mathematical elements of the model behave as intended

3.9
metric
indicator used to express an evaluative criterion and measured or predicted quantity

3.10
insertion gain
ratio between the value of a metric with and without a change to the system

NOTE 1 A reduction in the metric value is shown with a negative sign when the insertion gain is expressed in decibels.

NOTE 2 Although “insertion gain” is the preferred term, the term “insertion loss” is also used. A reduction in the metric value is shown with a positive sign when the insertion loss is expressed in decibels.

3.11
unsprung mass
collective mass of elements such as wheels, axles and, where appropriate, brake discs, axle hung motor, gearboxes, that bear on the rail below the vehicle suspension

Documents
Document Sharing Hub
Full document details: BS ISO 14837-1:2005

4 Overview of ground-borne vibration and ground-borne noise

4.1 Circumstances of interest

Ground-borne vibration and/or ground-borne noise can give rise to effects on human occupants of buildings. Very sensitive equipment or its operation can also be adversely affected. In extreme cases, ground-borne vibration can be such that there is a risk of damage to buildings and other structures.

This part of ISO 14837 provides guidance on the prediction models required to assess the effects of vibration on human beings (but not animals) and very sensitive equipment inside buildings, and on the buildings themselves.

People will perceive vibration in different forms, depending on the frequency range, as mechanical vibration of the human body (relevant frequency range 1 Hz to 80 Hz) and/or as sound, ground-borne noise emitted by vibrating parts of a building; i.e. the walls, floor and ceiling (relevant frequency range 16 Hz to 250 Hz).

NOTE 1 Vibration is perceived in different forms, either as whole body vibration (1 Hz to 80 Hz), or perceived through the tactile sense, which may have a higher frequency range.

NOTE 2 In unusual circumstances, frequencies as low as 16 Hz or as high as 500 Hz may be relevant to ground-borne noise.

NOTE 3 Secondary effects include higher frequency noise emitted by rattling of some items such as glasses, dishes, windowpanes, ceilings, light fittings and some furniture. Guidance is not provided on the prediction of sound generation by this mechanism because it is difficult to quantify, although it can be a significant source of disturbance.

Vibration in buildings can affect technical equipment; i.e. sensitive measuring instruments or manufacturing processes. The relevant frequency range is dependent upon the particular item of equipment and can be up to 200 Hz.

NOTE 4 Typically, dominant frequencies are less than 100 Hz because they represent the response of building elements.

The frequency range relevant to the evaluation of the risk of vibration-induced damage on building structures is 1 Hz to 500 Hz, although high strains associated with higher risk of damage are associated with low frequencies. Most building damage from man-made sources occurs in the frequency range 1 Hz to 150 Hz.

4.2 Source of ground-borne vibration and ground-borne noise

4.2.1 General

Rail systems are a source of vibration. The vibration is transferred and modified through the track system into the supporting infrastructure and then the surrounding ground, and into neighbouring buildings where it can cause perceptible vibration and/or audible ground-borne noise. This source/propagation path/receiver system is shown schematically in Figure 1. The origin of the vibration is the interaction between the rail and wheel depicted in Figure 2.

In the prediction of ground-borne vibration and/or ground-borne noise arising from rail systems, it should be noted that the source, propagation and receiver system depend on many matters (see Annex A), some of which are more significant than others. The parameters must be determined either from experience, data in the literature or expert opinion, or by *in situ* measurements.

The desired accuracy of the prediction model will depend upon the purpose of the prediction and is limited by the knowledge and understanding of system parameters.

Documents
Document Sharing Hub

Full document details: BS ISO 14837-1:2005

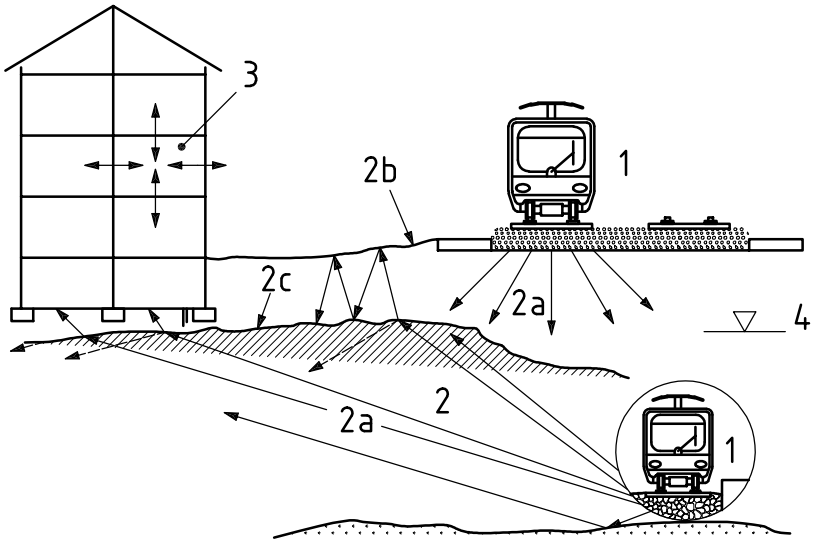

Key

1 source

2 propagation:
  2 a body waves (compression, shear)
  2 b surface waves (e.g. Rayleigh, Love)
  2 c interface waves (e.g. Stoneley)

3 receiver (vibration, re-radiated noise)

4 water table

NOTE The components of the system comprising source, propagation and receiver are interdependent.

Figure 1 — Example of source, propagation and receiver system

Documents
Document Sharing Hub
Full document details: BS ISO 14837-1:2005

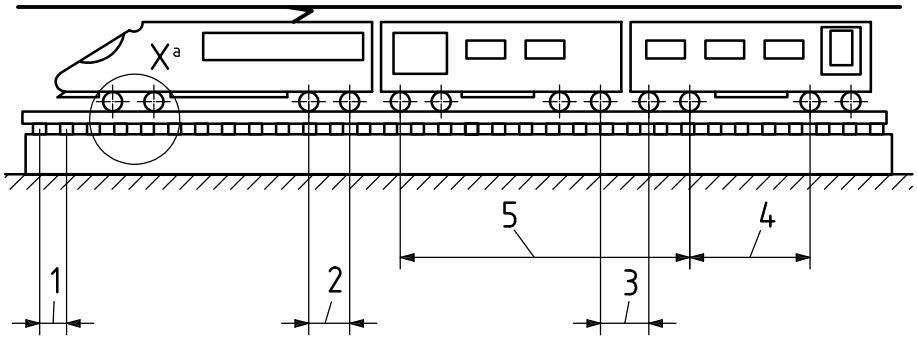

Key

1 rail support spacing
2 intra-bogie axle spacing
3 inter-bogie axle spacing
4 intra-vehicle axle spacing
5 inter-vehicle axle spacing

[a] for detail, see Figure 2 b).

a) Description of source

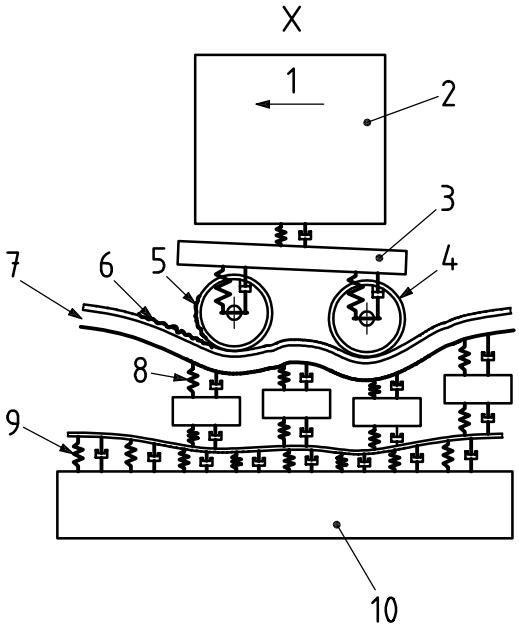

Key

1 train speed, v
2 part of carriage mass, m_C
3 part of bogie mass, m_B
4 unsprung mass, m_W
5 wheel roughness
6 rail roughness
7 rail impedance
8 typical model of rail support
9 typical model of formation/tunnel
10 ground impedance

NOTE Damping may not be viscous.

b) Example model for train/track

Figure 2 — Description of source

Documents
Document Sharing Hub
Full document details: BS ISO 14837-1:2005

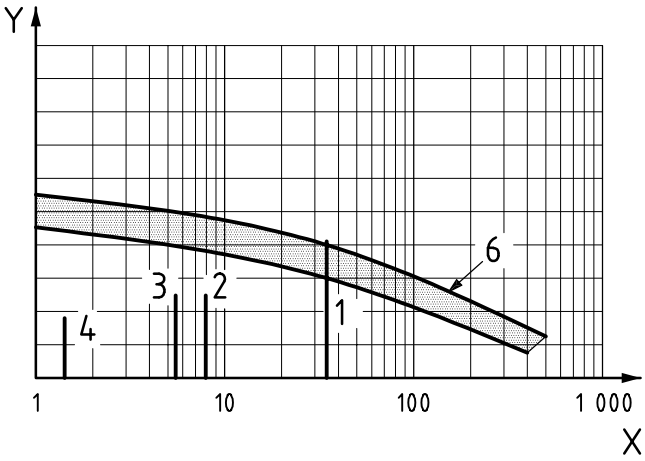

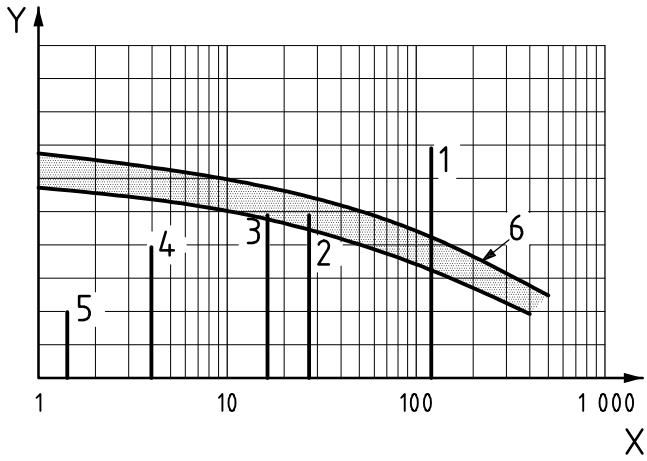

Key

X frequency, Hz

Y interaction force, dB

1 rail support passage frequency from [1] in Figure 2 a)

2 intra-bogie axle passage frequency from [2] in Figure 2 a)

3 inter-bogie axle passage frequency from [3] in Figure 2 a)

4 intra-vehicle axle passage frequency from [4] in Figure 2 a)

5 inter-vehicle axle passage frequency from [5] in Figure 2 a)

6 wheel and rail roughness

NOTE Passage frequencies are f_n [Hz] = v [km/h]/(3,6 l_n [m]) with l_n being the spacing considered.

c) Sources of excitation at wheel/rail interfaces at 80 km/h (indicative only)

d) Sources of excitation at wheel/rail interfaces at 250 km/h (indicative only)

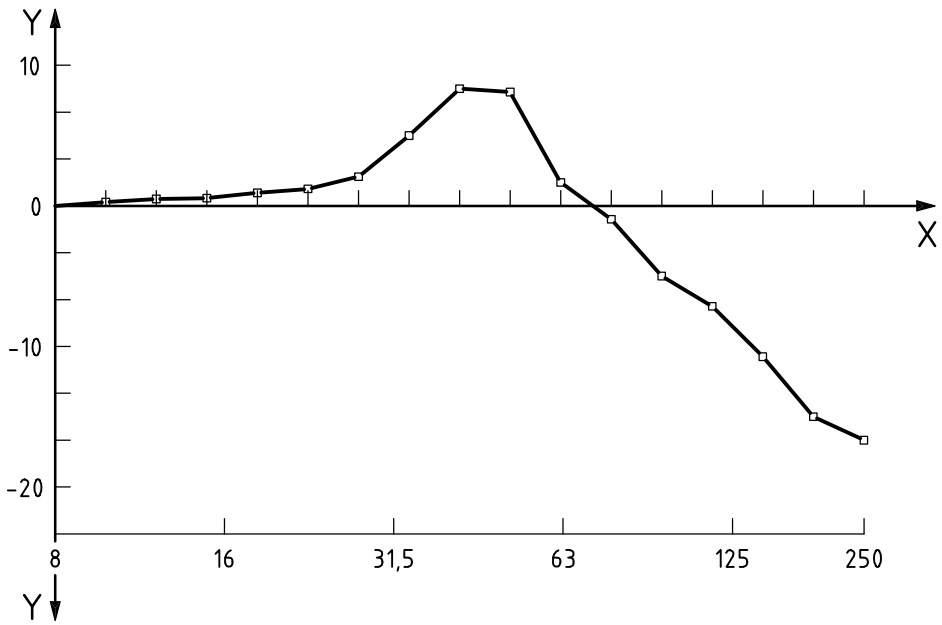

Key

X frequency, Hz (e.g. one-third-octave mid frequency)

Y insertion gain for train/track relative to a reference defined track, dB

e) Example insertion gain for track predicted by train/track model

Figure 2 (*continued*)

Documents
Document Sharing Hub
Full document details: BS ISO 14837-1:2005

4.2.2 Mechanism of excitation

Mechanisms of excitation are the following.

a) Moving loads (quasistatic) excitation, i.e. the moving distortion of the track and supporting medium due to the train load moving with the train. At fixed locations this is a time-dependent dynamic action and causes flexural waves in the track and the ground. There are mechanisms related to this that are not yet fully understood (e.g. effects of boundary conditions, inhomogeneities in the track and ground giving rise to propagating waves). It is possible for high-speed trains travelling on soft ground to exceed the Rayleigh (surface) wave speed of the ground. Unmitigated, this could generate large vibration levels in a similar way to the sonic boom generated by supersonic aircraft. Its effect in the near field on track stability are more significant. However, this issue is designed out by placing the track bed on stiffened ground or on concrete slab track with piled foundations to underlying stiffer strata. In tunnels, the tunnel lining and invert slab provide the stiff foundation that reduces the levels of vibration in the surrounding ground.

b) Excitation caused by wheel/rail roughness, i.e. random irregularities of the contact surfaces, rail and wheel cause forced excitations of the system (vehicle/track). Roughness will arise first during manufacture. Allowance should be made for the variation in roughness that occurs once in service. These irregularities will vary in service with time.

c) Parametric excitation: For railway tracks with discrete rail support (e.g. sleepers on ballast, resilient base plates on slab as distinct from embedded rail), the wheel “sees” a variation of stiffness depending upon its position along the rail. The moving dynamic forces excite the vehicle and track. The speed of the vehicle and support spacing define the support passage frequency. Similarly, other harmonic components arise due to axle spacing and bogie spacing. Where these frequencies coincide with the natural frequency of the vehicle and vehicle on the track system, considerable excitation of the vehicle track and surrounding environment can arise.

d) Additional wheel/rail defects: More severe forms of wheel and rail roughness can occur in some circumstances as a consequence of operation. For rail, the most severe form of roughness is corrugation. This consists of superimposed periodic irregularities of varying wavelengths. Corrugation can also occur on the wheel with other forms of severe “roughness” being associated with single or multiple wheel flats, ovality, out of balance and eccentricity. These irregularities will vary in service with time. Defects can also arise from insufficient remedial grinding or inappropriate remedial grinding of corrugated track.

e) Discontinuities of the track, i.e. gaps at the switches, at rail joints, dipped rail, etc. cause impact forces. If the length of jointed or welded rails becomes equal to the spacing between bogies of the vehicles, then the levels of vibration can be significantly increased.

f) Vehicle suspension (including the case of locked suspension).

g) Steel hardness, i.e. random or periodic variation in hardness of running surfaces, during manufacture or more usually arising in service.

h) Lateral loads, particularly due to vehicle guidance on tight radius of curvature, and through switches.

i) Driving conditions, i.e. acceleration and braking deceleration of the train form dynamic forces causing vibration.

j) Extreme environmental conditions: For example, railhead temperature and humidity affect wear and hence vibration.

The parameters described under a) through j) above only give rise to vibration as a consequence of the finite driving-point impedance seen at the contact patch between the railhead and the wheel tread.

The impedance seen at the railhead is principally determined by the design of the track, but is also influenced by the supporting structures (e.g. tunnel invert, the tunnel) and the surrounding ground.

For the frequencies of interest, the impedance at the wheel tread is principally determined by the unsprung mass of the vehicle. However, the overall mass of the vehicle and its payload can become important if the suspension becomes effectively rigid (e.g. due to lack of maintenance or the behaviour of dampers at high frequencies).

AVA Documents
Document Sharing Hub

Full document details: BS ISO 14837-1:2005

4.3 Propagation

With rail systems at grade and on elevated structures, the vibration in the ground is mostly carried by surface waves.

For rail systems in tunnels, the propagation of the vibration in the ground is carried via compression and shear waves. At a distance from the tunnel, depending upon the tunnel depth, surface waves may dominate.

The frequency range of interest for ground-borne noise and vibration at the receiver is approximately 1 Hz to 250 Hz. Higher frequencies may be received in certain ground conditions (e.g. rock), or when the building is directly in contact with the tunnel or ground rock, or at a very short distance between tunnel and building or where a soil interlayer between building foundation and rock strata is thin.

The low-pass filter effect of the train-track bed system attenuates the frequencies in the upper part of the relevant frequency range considered in this part of ISO 14837. Due to effects such as damping in the ground, the frequency spectrum changes its shape with distance, and lower frequencies may dominate over larger distances, depending on the ground material.

Where the receiving building is in direct contact with the tunnel (i.e. the tunnel is part of the foundations of a building), the main propagation path is through the structure of the building and therefore the prediction model should take account of the dynamic response of the building structure. Propagation will take place not only through compression and shear waves but also through flexural/bending waves.

Consideration should be given to man-made structures in the ground (such as tunnels, services, ground treatment and/or anchors) and the effect that they may have on propagation characteristics. It may be necessary also to consider the effect of ground water.

Damping in the ground should be considered carefully. Water saturation of porous soils can introduce viscous damping at higher frequencies. However, caution should be exercised in using major simplifications, such as the presumption of viscous damping generally, as this may give rise to significant errors in predicted values particularly at high frequencies. At low strains, it is common to treat the soil behaviour as linear, although non-linearity is implicit in the behaviour of soils to a varying degree as a function of strain. The need to consider these issues and the approach adopted will vary depending on the type of model used. Further guidance is provided in Clause 9.

NOTE 1 The presence of layering can give preference to some frequencies.

NOTE 2 In some situations, there may be errors in assuming clear and simple boundaries for the layers.

4.4 Receiver

The frequency range of interest for the immissions (ground-borne noise and vibration) at the receiver is approximately 1 Hz to 250 Hz. Higher frequencies may be received in certain ground conditions (e.g. rock), or when the building is directly in contact with or very close to the tunnel.

The prediction model should allow for the transfer function between free-field and building foundation. The model should allow for the response of building elements (e.g. floors) that may magnify or attenuate the incoming vibration as a function of frequency.

Ground-borne vibration can radiate noise in rooms where the magnitude will vary spatially and will depend upon the radiation efficiency of the structure and room use, which will be a function of frequency.

The modelling of the receiver should have due regard to structural form and fitting out as a consequence of use (e.g. the models used for rooms in residential property may need to be different from those used for large rooms such as auditoria).

Documents
Document Sharing Hub
Full document details: BS ISO 14837-1:2005

5 Effects of ground-borne vibration and ground-borne noise

5.1 General

This clause provides guidance on the effects of ground-borne vibration and ground-borne noise on buildings, occupants and sensitive equipment, and the frequency range relevant in each case. It also puts the magnitude of ground-borne noise and vibration from rail systems into context.

5.2 Perception of ground-borne vibration (1 Hz to 80 Hz)

Structural vibration inside buildings can be detected by human occupants and can affect them in many ways: their quality of life can be reduced as can their working efficiency. These effects are considered by ISO 2631-2. The levels of vibration generated inside buildings close to rail systems are such that in some situations they give rise to (in order of magnitude) annoyance, discomfort, activity disturbance and, at extreme levels, might in rare cases affect health.

ISO 2631-2 provides a frequency weighting curve related to human response to whole-body vibration inside buildings and guidance on evaluating complaints.

NOTE Vibration can also be visually perceived (e.g. swaying of pendulum light fittings, light lever action on reflective surfaces). This mechanism is more likely to be associated with rail systems at grade as distinct from rail systems in tunnels.

5.3 Perception of ground-borne noise (16 Hz to 250 Hz)

Ground-borne noise occurs when often imperceptible levels of ground-borne vibration give rise to vibration of building surfaces, and some contents that in turn cause an audible “rumbling” sound, usually by radiation to the air inside rooms. Ground-borne noise is more often associated with rail systems in tunnels, as distinct from railways at grade, because the receiving building is completely screened from any airborne noise in the tunnel. Ground-borne noise could, however, also be an issue for an at-grade situation in a room that is on the remote façade to the source.

Ground-borne noise can give rise to annoyance or activity disturbance. Higher levels of ground-borne noise may give rise to sleep disturbance.

NOTE 1 The primary perception of ground-borne noise is through the air, although people lying on beds may also perceive ground-borne noise/vibration at much lower levels as it propagates through the bed structure (bone conduction).

NOTE 2 Higher frequency noise can be emitted by rattling of some elements (see 4.1, NOTE 3).

5.4 Effect on buildings (1 Hz to 500 Hz)

Extremely high levels of ground-borne vibration or a large number of vibration cycles of high magnitude can, in unusual circumstances, give rise to risk of damage to building structures either through direct stress/strain on building components or through induced settlement in cohesion-less soils and fill. The vibration levels required are of the order of 10 to 100 times larger than those associated with human perception and thus levels of vibration sufficient to damage a building, even cosmetically, would be intolerable to occupants. For further guidance, see ISO 4866 and national standards.

The risk of vibration-induced damage to buildings associated with the operation of railways should be considered in the context of the greater risk of damage posed by construction work from induced settlement both during and after construction.

NOTE 1 There can be effects on other structures (e.g. adjacent tunnels, utilities) that may need to be considered.

NOTE 2 Most building damage arises in the frequency range 1 Hz to 150 Hz.

AVA Documents
Document Sharing Hub

Full document details: BS ISO 14837-1:2005