BS ISO 14934-2:2013

BSI Standards Publication

Fire tests — Calibration and use of heat flux meters

Part 2: Primary calibration methods

NO COPYING WITHOUT BSI PERMISSION EXCEPT AS PERMITTED BY COPYRIGHT LAW

raising standards worldwide™

Full document details: BS ISO 14934-2:2013

National foreword

This British Standard is the UK implementation of ISO 14934-2:2013.

The UK participation in its preparation was entrusted to Technical Committee FSH/21, Reaction to fire tests.

A list of organizations represented on this committee can be obtained on request to its secretary.

This publication does not purport to include all the necessary provisions of a contract. Users are responsible for its correct application.

© The British Standards Institution 2013.

Published by BSI Standards Limited 2013

ISBN 978 0 580 71902 8

ICS 13.220.40; 13.220.50

Compliance with a British Standard cannot confer immunity from legal obligations.

This British Standard was published under the authority of the Standards Policy and Strategy Committee on 30 April 2013.

Amendments issued since publication

Date	Text affected

Documents
Document Sharing Hub

Full document details: BS ISO 14934-2:2013

INTERNATIONAL STANDARD

ISO 14934-2

Second edition
2013-03-15

Fire tests — Calibration and use of heat flux meters —

Part 2: Primary calibration methods

Essais au feu — Étalonnage et utilisation des appareils de mesure du flux thermique —

Partie 2: Méthodes d'étalonnage primaire

Reference number
ISO 14934-2:2013(E)

Documents
Document Sharing Hub

© ISO 2013

Full document details: BS ISO 14934-2:2013

COPYRIGHT PROTECTED DOCUMENT

© ISO 2013

All rights reserved. Unless otherwise specified, no part of this publication may be reproduced or utilized otherwise in any form or by any means, electronic or mechanical, including photocopying, or posting on the internet or an intranet, without prior written permission. Permission can be requested from either ISO at the address below or ISO's member body in the country of the requester.

ISO copyright office
Case postale 56 • CH-1211 Geneva 20
Tel. + 41 22 749 01 11
Fax + 41 22 749 09 47
E-mail copyright@iso.org
Web www.iso.org

Published in Switzerland

© ISO 2013 – All rights reserved

Documents
Document Sharing Hub

Full document details: BS ISO 14934-2:2013

Contents

Page

Foreword ..... **v**

Introduction ..... **vi**

1 Scope **1**

2 Normative references **1**

3 Terms and definitions **1**

4 Principles **1**
4.1 General principles 1
4.2 Principle of the vacuum black-body cavity (VBBC) method (method 1) 1
4.3 Principle of the spherical black-body cavity method (method 2) 2
4.4 Principle of the variable temperature black-body (VTBB) method (method 3) 2

5 Suitability of a gauge for calibration **2**
5.1 Types of heat flux meters 2
5.2 Design of heat flux meters 3
5.3 Measuring range 3
5.4 Status of heat flux meter prior to calibration 3

6 Vacuum black-body cavity (VBBC) method (method 1) **3**
6.1 Apparatus 3
6.2 Operating procedure 6
6.3 Uncertainty 6

7 Spherical black-body cavity method (method 2) **7**
7.1 Apparatus 7
7.2 Operating procedure 11
7.3 Uncertainty 11

8 Variable-temperature black-body (VTBB) method (method 3) **14**
8.1 Apparatus 14
8.2 Operating procedure 16
8.3 Uncertainty 18

9 Number of calibration levels **19**

10 Expression of results **20**

11 Calibration report **21**

Annex A (normative) **Operating procedure for vacuum black-body cavity method (VBBC) (method 1)** **22**

Annex B (normative) **Calculating the irradiance from the vacuum black-body cavity (VBBC) to the heat flux meter** **24**

Annex C (informative) **Examples of computer screens for calculating the irradiance from the vacuum black-body cavity (VBBC)** **27**

Annex D (normative) **Operating procedure for spherical black-body cavity method (method 2)** **29**

Annex E (normative) **Calculating the irradiance from the spherical black-body cavity to the heat flux meter** **31**

Annex F (normative) **Drawings for the fixed and movable cooler to the spherical black-body cavity** **34**

Annex G (informative) **Guidance notes for operators using the spherical black-body cavity method** **38**

Annex H (normative) **Electrical substitution radiometer (ESR) operating procedure** **39**

Annex I (normative) **Procedure for heat flux meter calibration using the 25-mm VTBB method**

AVA Documents
Document Sharing Hub

© ISO 2013 – All rights reserved

Full document details: BS ISO 14934-2:2013

(method 3) **41**
Annex J (normative) **Data reduction procedure for the VTBB method (method 3)** **43**
Annex K (informative) **Precision of calibration** **45**
Bibliography **46**

© ISO 2013 – All rights reserved
Documents
Document Sharing Hub
Full document details: BS ISO 14934-2:2013

Foreword

ISO (the International Organization for Standardization) is a worldwide federation of national standards bodies (ISO member bodies). The work of preparing International Standards is normally carried out through ISO technical committees. Each member body interested in a subject for which a technical committee has been established has the right to be represented on that committee. International organizations, governmental and non-governmental, in liaison with ISO, also take part in the work. ISO collaborates closely with the International Electrotechnical Commission (IEC) on all matters of electrotechnical standardization.

International Standards are drafted in accordance with the rules given in the ISO/IEC Directives, Part 2.

The main task of technical committees is to prepare International Standards. Draft International Standards adopted by the technical committees are circulated to the member bodies for voting. Publication as an International Standard requires approval by at least 75 % of the member bodies casting a vote.

Attention is drawn to the possibility that some of the elements of this document may be the subject of patent rights. ISO shall not be held responsible for identifying any or all such patent rights.

ISO 14934-2 was prepared by Technical Committee ISO/TC 92, *Fire safety*, Subcommittee SC 1, *Fire initiation and growth*.

This second edition cancels and replaces the first edition (ISO 14934-2:2006), which has been technically revised.

ISO 14934 consists of the following parts, under the general title *Fire tests — Calibration and use of heat flux meters*:

— *Part 1: General principles*

— *Part 2: Primary calibration methods*

— *Part 3: Secondary calibration method*

— *Part 4: Guidance on the use of heat flux meters in fire tests*

© ISO 2013 – All rights reserved

Documents
Document Sharing Hub
Full document details: BS ISO 14934-2:2013

Introduction

In many fire test methods, the radiation level is specified and, therefore, it is of great importance that the radiant heat flux is well defined and measured with sufficient accuracy. Radiant heat transfer is also the dominant mode of heat transfer in most real fires.

In practice, radiant heat flux is usually measured with so-called total heat flux meters of the Schmidt-Boelter (thermopile) or Gardon (foil) type. Such meters register the combined heat flux by radiation and convection to a cooled surface. The contribution to the heat transfer by convection depends mainly on the temperature difference between the surrounding gases and the sensing surface and on the velocity of the surrounding gases. It will, however, also depend on size and shape of the heat flux meter, its orientation and on its temperature level, which is near the cooling water temperature. In many practical situations in fire testing, the contribution due to convection to the sensing surface of the instrument can amount to 25 % of the radiant heat flux. Thus it is always necessary to determine and control this part.

To determine the fraction of total heat flux due to radiation, a calibration scheme is developed where primary calibration is performed on two different types of heat flux meters: (1) a total hemispherical radiometer sensitive to radiation only, and (2) a total heat flux meter, (most frequently used) sensitive to both radiant heat transfer and to convective heat transfer. A comparison of measurements between the two types of meters in secondary (or transfer) calibration methods allows a characterization of the influence of convection in the method. Where possible, in all calibrations and measurements of radiative heat flux, the uncertainty calculations should include the uncertainty associated with removing the convective component. For secondary calibration methods, a combined use of hemispherical radiometers and total heat flux meters makes it possible to estimate the convection contribution. The same arrangement can be used in calibration of fire test methods as well.

Primary calibration is performed in a black-body cavity under conditions where the convective part of the heat transfer can be neglected or controlled. One such apparatus is an evacuated black-body facility with the unique characteristic of negligible convection and conduction effects described in this document as the vacuum black-body cavity (VBBC) method (method 1). Other (non-evacuated) black-body facilities can also be suitable as primary heat sources for calibration, providing they are fully characterized, particularly in terms of any convection effects on the sensing surface of the heat flux meter being calibrated. One such facility, described in this document as the spherical black-body cavity method (method 2), is a furnace with an orifice pointing downwards to minimize the convection. Another is the variable temperature black-body method (method 3) in which the effect of the convective component is minimized by the adoption of a substitution procedure in which the heat flux meter to be calibrated is compared with a primary standard radiometer. Under such conditions the convective effect for each measurement can be asumed to be of a similar magnitude.

NOTE Schmidt-Boelter meters and Gardon meters are examples of suitable products available commercially. This information is given for the convenience of users of this part of ISO 14934 and does not constitute an endorsement by ISO of this product.

© ISO 2013 – All rights reserved
Documents
Document Sharing Hub
Full document details: BS ISO 14934-2:2013

INTERNATIONAL STANDARD ISO 14934-2:2013(E)

Fire tests — Calibration and use of heat flux meters —

Part 2: Primary calibration methods

1 Scope

This part of ISO 14934 describes three methods for calibration of total hemispherical radiometers and total heat flux meters that are exposed to a well-defined radiation from a radiant heat source. The equipment is designed to minimize influences due to convective heat transfer during calibration. It is important to note that when the instruments are used in practice they measure a combination of radiant and convective heat transfers. The latter will depend on the design of the heat flux meter, the orientation, local temperature and flow conditions, and on the temperature of the cooling water.

2 Normative references

The following documents, in whole or in part, are normatively referenced in this document and are indispensable for its application. For dated references, only the edition cited applies. For undated references, the latest edition of the referenced document (including any amendments) applies.

ISO 13943, *Fire safety — Vocabulary*

ISO 14934-1, *Fire tests — Calibration and use of heat flux meters — Part 1: General principles*

IEC 60584-2, *Thermocouples — Part 2: Tolerances*

ISO/IEC Guide 98-3, *Uncertainty of measurement — Part 3: Guide to the expression of uncertainty in measurement (GUM:1995)*

ISO/IEC Guide 99, *International vocabulary of metrology — Basic and general concepts and associated terms (VIM)*

3 Terms and definitions

For the purposes of this document, the terms and definitions given in ISO 13943, ISO 14934-1, ISO/IEC Guide 98-3 and ISO/IEC Guide 99 apply.

4 Principles

4.1 General principles

Calibration of heat flux meters (total hemispherical radiometers and total heat flux meters) is performed with a black-body radiant heat source.

4.2 Principle of the vacuum black-body cavity (VBBC) method (method 1)

This method is used to calibrate heat flux meters between 2 kW/m^2 and 70 kW/m^2. It is designed to accept total heat flux meters or total hemispherical radiometers with a housing diameter of up to 50 mm. These may have pipes for water or/and air that are located axially. Calibration of heat flux meters consists of reading the output voltage of total heat flux meters or total hemispherical radiometers when irradiated by a traceable black-body radiant source operating under vacuum. By lowering the absolute pressure in the black-body cavity to between 0,5 Pa and 2 Pa, the convective heat transfer is significantly

© ISO 2013 – All rights reserved

AVA Documents Document Sharing Hub

Full document details: BS ISO 14934-2:2013

reduced. Heat flux meters to be calibrated are fixed on a support and form a part of the closed system. The operating procedure is given in Annex A. The relation between the furnace and the irradiance to the heat flux meter is given in Annex B. Examples of computer screens are given in Annex C.

4.3 Principle of the spherical black-body cavity method (method 2)

This method is used to calibrate heat flux meters between 2 kW/m^2 and 70 kW/m^2. A black-body radiant heat source designed as a spherical furnace with an aperture at the bottom is used. The temperature level of the furnace is controlled with high precision and is very uniform inside the furnace assuring a high precision of the radiant heat level.

Heat flux meters to be calibrated are inserted through the aperture at the bottom of the furnace with the sensing surface of the heat flux meter oriented horizontally. The influence of convection is thus reduced to a minimum. The heat flux meter sees nothing but the controlled environment of the black-body emitter. The radiation level of this black-body emitter depends primarily on the measured temperature making it traceable to international thermal calibration standards.

The accuracy of the method depends on the design of the test apparatus. The operating procedure is given in Annex D. The relation between the furnace temperature and the irradiance to the heat flux meter is described in Annex E. The limits of errors assume that the apparatus is constructed according to the figures in Annex F. Guidance notes for operators are given in Annex G.

4.4 Principle of the variable temperature black-body (VTBB) method (method 3)

The technique uses the principle of electrical substitution radiometry to calibrate heat flux sensors up to 50 kW/m^2. The sensors are calibrated with reference to a room-temperature electrical substitution radiometer whose calibration is traceable to a primary standard high accuracy cryogenic radiometer (HACR). This is a standard for optical radiation power and is supported through a chain of independent calibrations.

The calibration uses the 25 mm cavity diameter variable temperature black-body (VTBB) facility as broadband radiant source. The VTBB consists of a dual-cavity, electrically heated graphite tube. The black-body temperature is controlled and is stable within ± 0,1 K of the set value.

The heat flux sensor to be calibrated and the reference standard radiometer are located at a fixed distance away from the black-body aperture, depending on the heat flux level. The variation in the incident heat flux level at the sensor location is obtained by varying the VTBB temperature. The operating procedure for electrical substitution radiometer is given in Annex H. The calibration procedure is given in Annex I. The data reduction procedure is given in Annex J.

5 Suitability of a gauge for calibration

5.1 Types of heat flux meters

All three methods are intended for calibration of total hemispherical radiometers and of total heat flux meters. The total heat flux meters are usually of so called Schmidt-Boelter and Gardon types. Along with the experimental calibration data, an expression of the sensitivity of the heat flux meter is normally also given. It should be noted that for each given wavelength, λ, the heat flux meter has a specific spectral sensitivity. For heat flux meters used in fire tests, it can, however, be assumed that the sensitivity does not depend on the wavelength over the spectral range of the radiating sources commonly examined. Deviations from the ideal directional response characteristics may be neglected.

The field of view is assumed to be hemispherical (solid angle 180°), and the surface is assumed to behave as a perfect black-body, both regarding the spectral characteristics and the directional response.

The methods can be used for radiometers with a limited field of view, provided that this field of view is characterized, and that corrections made for this field of view are traceable.

© ISO 2013 – All rights reserved
Documents
Document Sharing Hub
Full document details: BS ISO 14934-2:2013

5.2 Design of heat flux meters

Radiometers and heat flux meters with a housing diameter of up to 50 mm and a sensing surface diameter up to 10 mm can be accommodated in methods 1 and 2. During the calibration the heat flux meter body temperature must remain constant. This is usually achieved by using water-cooling. In some cases an air supply is used to keep the window free from dust. If possible, water and/or air supply piping are routed parallel to the axis of the meter so as to keep the lines within the housing diameter of 50 mm.

NOTE For the VTBB, there is no restriction on the sensor-housing diameter, and on how the cooling water or purge gas lines are routed. However, it is recommended that the sensing surface of the gauge is limited to less 10 mm in diameter.

5.3 Measuring range

Radiometers are typically designed for use within a certain range. They should be calibrated within this range. For radiometers that will be used beyond the range of the method used extrapolation of the obtained calibration results may not be used unless justified.

5.4 Status of heat flux meter prior to calibration

The coating on the sensor is visually inspected, and if the conditions indicate the need for repainting, the customer is informed accordingly.

6 Vacuum black-body cavity (VBBC) method (method 1)

6.1 Apparatus

6.1.1 General description of apparatus for method 1

The primary calibration apparatus is a closed and insulated system including two essential parts (see a schematic drawing in Figure 1):

— a gun which is a moving cylindrical tube (1) including the electrically heated [(3), (6)], black-body cavity (4), the diaphragms (5), the heat flux meter (10) and its cooling pipes,

— an insulated and cooled chamber (2).

© ISO 2013 – All rights reserved

Documents
Document Sharing Hub
Full document details: BS ISO 14934-2:2013

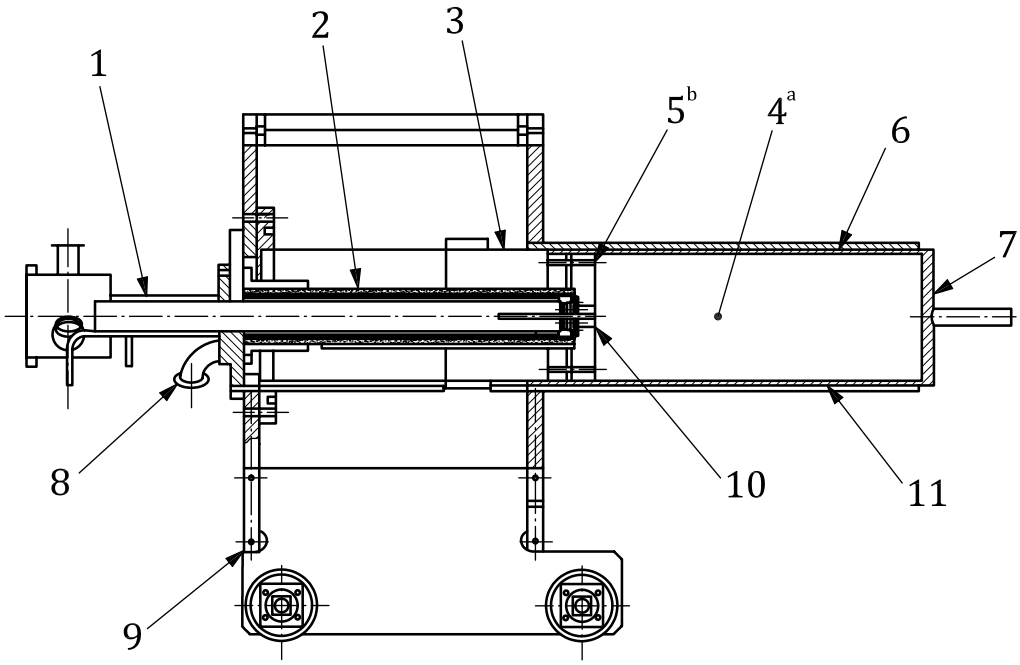

Key

1 water cooled heat flux meter holder
2 ceramic tube
3 electric heater
4 black-body cavity
5 diaphragm
6 three electric heaters
7 multi-points radial thermocouple
8 vacuum pump
9 mobile carriage
10 heat flux meter
11 multi-points longitudinal thermocouple

[a] See Figure 3.
[b] See Figure 2.

Figure 1 — Cross-section of the furnace (VBBC)

6.1.2 The vacuum black-body cavity (VBBC)

The cavity is a horizontally orientated cylinder with a diameter of about 160 mm and a length of about 420 mm (see Figures 2 and 3). The heat flux meter is put flush to the diaphragm in order to close the system composed of the black-body and the diaphragm.

The black-body cavity is put under vacuum using a combination of a primary pump and a molecular turbo pump. The pressure within the cavity is measured and recorded continuously.

The black-body cavity is electrically heated through the cylindrical wall by means of coils. Four proportional integral differential regulators (PID) control the heating of the cavity. These PID controllers maintain the black-body temperature to approximately ± 0,3 K of the set value. A ceramic jacket is placed around the cavity to reduce heat losses. The heat flux meter is surrounded by three diaphragms in order to reflect the radiation coming from the cavity and to limit the losses generated by this opening. The black-body can be operated up to a temperature of about 900 °C.

© ISO 2013 – All rights reserved
Documents
Document Sharing Hub
Full document details: BS ISO 14934-2:2013

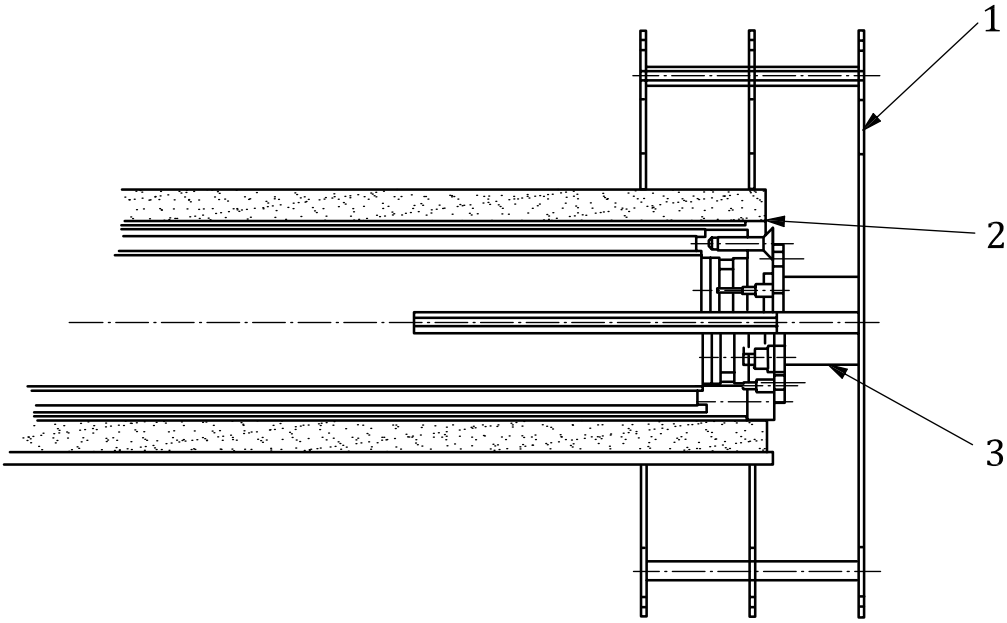

Key

1 diaphragm

2 heat flux meter interface for smooth body with and without flange

3 heat flux meter

Figure 2 — Cross-section of the heat flux meter flush to the diaphragms

Dimensions in millimetres

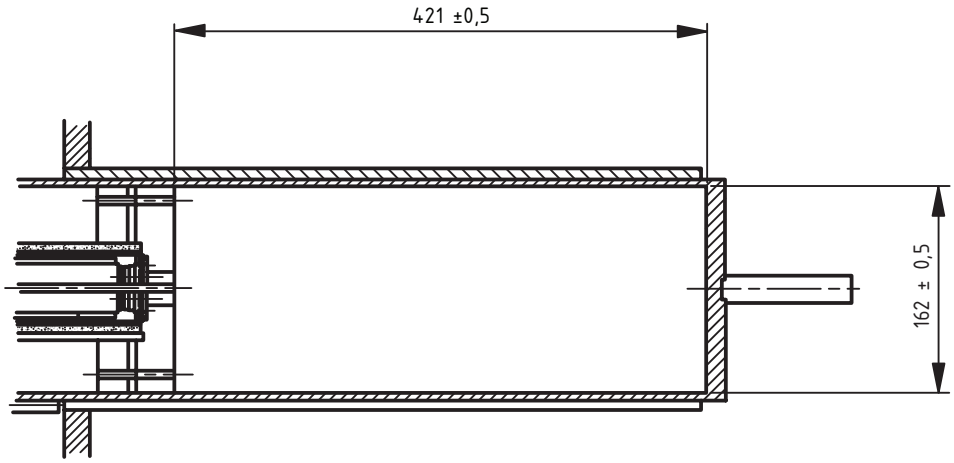

Figure 3 — Cross-section of the black-body cavity

6.1.3 Temperature measurement

Temperature profiles of the cavity are measured with thermocouples.

a) A set of type-S thermocouples measure the radial temperature variation at the back of the cavity; radial positions of the thermocouples from the centre are 0 mm, 27 mm, 54 mm, 81 mm.

b) Type-K thermocouples are inserted at different points along the cavity to measure the temperature gradient. Positions of the thermocouples from the front of the black-body are 0 mm, 17 mm, 33 mm, 50 mm, 67 mm, 83 mm, 100 mm, 133 mm, 167 mm, 200 mm, 250 mm, 300 mm, 350 mm, 410 mm.

AVA Documents
Document Sharing Hub

© ISO 2013 – All rights reserved

Full document details: BS ISO 14934-2:2013

c) A ceramic tube containing a calibrated type-S thermocouple is used to give a reference and to check the temperature variation along the cavity.

6.1.4 Pressure measurement

The pumping system is composed of two pumps:

a) mechanical primary pump, which lowers the pressure from the atmospheric pressure to 10 000 Pa,

b) molecular turbo pump, known as the secondary pump, which makes it possible to reduce the pressure to less than 1 Pa. The measurement of the pressure is performed using a Pirani gauge.

Returning to atmospheric pressure is carried out under nitrogen.

6.1.5 Data measurement and software – interfacing of the calibration set-up

The incident heat radiation on a heat flux sensor inserted in the black-body cavity can be determined from measuring the temperatures and pressure in the cavity and the position and geometry of the sensor. A systematic calculation has been developed to determine the incident heat radiation.

The response of the heat flux meter and different thermocouples are measured using a voltmeter with the appropriate accuracy. All required output voltages (pressure gauge, thermocouple, etc.) are recorded using a scanning data logging system.

The data reduction and calculation of the irradiance produced on the sensor is carried out using a special computer routine.

6.2 Operating procedure

The heat flux meter is inserted into the black-body cavity working under vacuum. In this case and to a first approximation, the heat flux meter output signal is directly proportional to the total incident heat flux irradiating the sensor.

In a preliminary step, the relationship between total incident heat flux on a typical laboratory heat flux meter and cavity temperature was calculated using a net heat radiation method and convection heat transfer modelling inside the black-body cavity. Then, when a heat flux meter is calibrated, this relationship with the same assumptions about experimental boundary conditions is used to obtain the total incident heat flux from measurements of cavity temperature.

The calibration procedure is given in detail in Annex A. The data reduction procedure is described in Annex B.

6.3 Uncertainty

6.3.1 Uncertainty in general

The estimation of the expanded uncertainty of a measurement is based on an analysis of the main sources of uncertainties. The contribution of each component arising from the method, the medium and the devices used is analysed. A summary of the estimated uncertainties is given in Table 1.

6.3.2 Black-body temperature, heat transfer modelling and emissivity

The black-body temperature component takes all details of a temperature measurement into account. Heat transfer modelling component is obtained by an analysis of the influence of thermocouple positions, radiation and convection modelling and thermal resistance (about 1,3 % at low heat flux level). This part is the most important source of uncertainty. Emissivity uncertainty of each part of the black-body cavity can be considered as a negligible contribution to the total uncertainty.

© ISO 2013 – All rights reserved
Documents
Document Sharing Hub
Full document details: BS ISO 14934-2:2013

6.3.3 Pressure output reading

The uncertainty on the pressure output reading is determined from details of the calibration and resolution of the instruments.

6.3.4 Radiometer reading

This contribution is calculated for a water-cooled gauge. Repeatability and influence of the cooling flow are in particular taken into account. Depending of the heat flux level, different scenarios for data acquisition of radiometer readings are applied. The result obtained is a compromise between the effect of time of equilibrium in the calibration programme heat flux levels and the resistance of the gauge's coating.

Table 1 — Summary of sources of uncertainty

Uncertainty source	Type	Relative uncertainty ± % at					
Component		272 °C (5,0 kW/m²)	375 °C (10,0 kW/m²)	542 °C (25,0 kW/m²)	671 °C (45,1 kW/m²)	700 °C (50,8 kW/m²)	800 °C (75,2 kW/m²)
Black-body temperature	A-B	0,24	0,20	0,20	0,19	0,19	0,18
Heat transfer modelling	B	1,27	1,07	0,85	0,73	0,71	0,64
Black-body emissivity	B	0,00	0,00	0,00	0,00	0,00	0,00
Pressure output reading	B	0,10	0,07	0,03	0,02	0,02	0,01
Radiometer reading	A-B	0,84	0,54	0,43	0,42	0,41	0,41
Combined expanded relative uncertainty	(k = 2)	3,1	2,4	1,9	1,7	1,7	1,6

The relative expanded uncertainty (k = 2) is estimated to be less than ± 2,5 % for the heat flux range between 10 and 75 kW/m².

7 Spherical black-body cavity method (method 2)

7.1 Apparatus

7.1.1 General description of apparatus for method 2

The method is a semi-closed method based on the use of a well-insulated, electrically heated spherical furnace chamber. A water cooled heat flux meter holder housing the heat flux meter is inserted in the opening at the bottom of the furnace. The furnace is shown in Figure 4.

The spherical furnace should have a large area compared to the opening to act as a nearly perfect black-body emitter. The aperture in the water cooled sight tube defines the view factor under which the furnace radiates to the heat flux meter. The sight tube and the heat flux meter with its holder are at the bottom of the furnace to reduce the effect of convective currents.

© ISO 2013 – All rights reserved

Documents
Document Sharing Hub
Full document details: BS ISO 14934-2:2013

7.1.2 The spherical furnace chamber

The spherical furnace consists of an inner shell of Inconel[1)] material which is heavily oxidized to enhance its spectral emissivity. On the outside of that Inconel shell, evenly distributed electrical heating coils are attached with a ceramic compound with good thermal conductivity. The furnace chamber is embedded in high temperature resistant ceramic insulation to minimize heat losses and establish an even temperature distribution. The inner diameter of the furnace chamber should be larger than 4,5 times the restricting aperture of the water cooled sight tube.

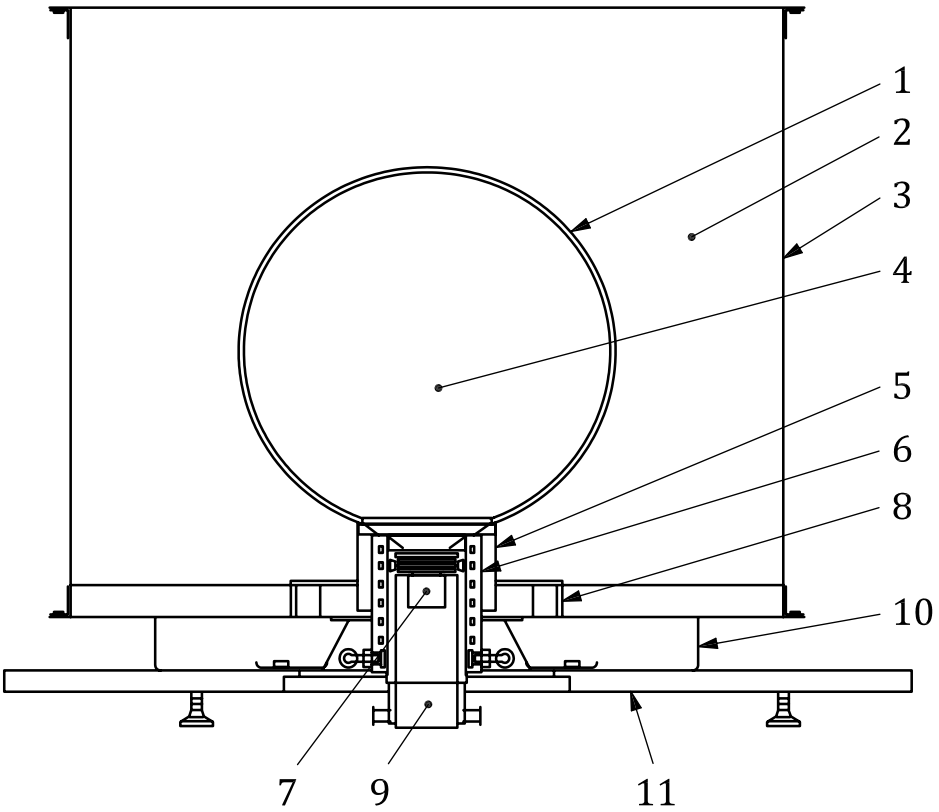

Key

1 spherical cavity with heater in ceramic casting
2 low density ceramic insulation
3 interior stainless steel housing
4 thermocouple attached to sphere interior surface
5 hard ceramic insulator
6 water cooled sight tube
7 heat flux meter
8 ceramic insulator stand-offs
9 movable, water cooled, heat flux meter holder
10 interior support structure
11 bottom face plate

Figure 4 — Vertical cross-section of the spherical furnace

1) Inconel is an example of a suitable product available commercially. This information is given for the convenience of users of this part of ISO 14934 and does not constitute an endorsement by ISO of this product.

© ISO 2013 – All rights reserved
Documents
Document Sharing Hub
Full document details: BS ISO 14934-2:2013

7.1.3 The sight tube and the heat flux meter holder

The water cooled sight tube consists of an assembly of concentric cylinders, with a system of water channels in between. The sight tube shall be carefully machined to accurate dimensions. Its top opening forms an aperture, through which the furnace radiates to the heat flux meter. Some distance down (X_1 in Figures 5 and 6), a flange is located. This flange serves partly as a stray radiation shield, but mainly as a rest, in order to position the water cooled heat flux meter holder exactly. The sight tube with the heat flux meter holder is shown in Figure 5 where the main details are identified.

Dimensions in millimetres

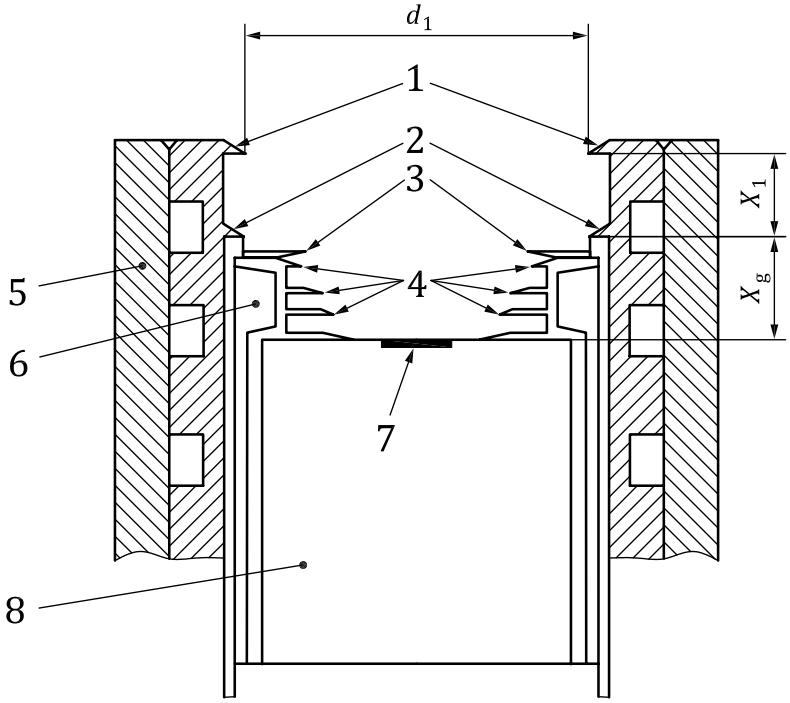

Key

1 restricting aperture
2 upper shielding flange and rest for heat flux meter holder
3 aperture disc
4 shielding flanges of heat flux meter holder
5 inner part of sight tube with water channels
6 heat flux meter holder with water channels
7 sensing surface
8 heat flux meter body (schematic)

NOTE 1 The aperture diameter, d_1, is (60,18 ± 0,01) mm and the distance X_1 is (13,05 ± 0,03) mm. Note that the distance X_g varies, depending on the heat flux meter design, as it is the distance between the top of the holder and the sensing surface of the heat flux meter. Normally it is around 17 mm.

NOTE 2 The figure shows the cross-section at the level of the cut. Parts that lay behind the cut and that should be visible are not included.

Figure 5 — Cross-section of the inner part of the water cooled sight tube with the heat flux meter holder in its top position. This option is referred to as without spacer ring

© ISO 2013 – All rights reserved

Documents
Document Sharing Hub
Full document details: BS ISO 14934-2:2013

Dimensions in millimetres

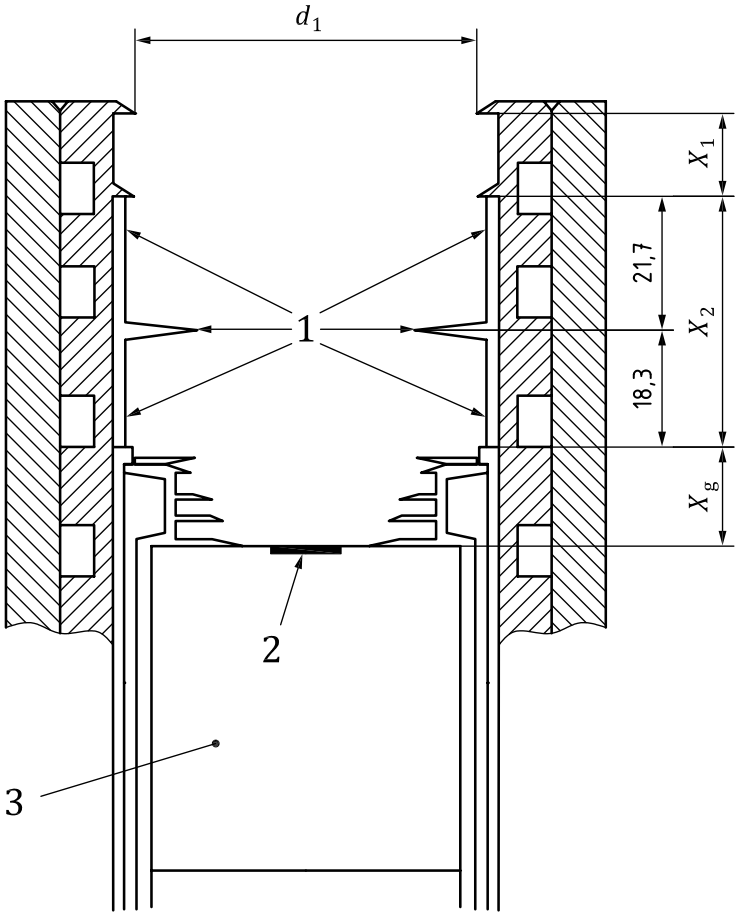

Key

1 spacer ring with shielding flange

2 sensing surface

3 heat flux meter body (schematic)

NOTE 1 The distance X_2 is (40 ± 0,02) mm.

NOTE 2 The figure shows the cross-section at the level of the cut. Parts that lay behind the cut and that should be visible are not included.

Figure 6 — Cross-section of the inner part of the water cooled sight tube with the heat flux meter holder 40 mm below the top position and with the spacer ring inserted. This option is referred to as with spacer ring

The sight tube is designed for use with the heat flux meter holder in two positions without causing reflections from the cooler walls. The top position (without spacer ring) and a position 40 mm below that (with spacer ring) provides for radiation ranges of 6 kW/m^2 to 75 kW/m^2 and 2 kW/m^2 to 25 kW/m^2, respectively, at the temperature interval 400 °C to1 000 °C. The sight tube and the heat flux meter holder shall be accurately manufactured to provide an exact input for calculation of the radiation level at the sensing surface.

Figure 5 shows the heat flux meter holder in its top position. The holder has a number of flanges which protect the heat flux meter from receiving radiation reflected from the cooled holder wall. The flanges also help to conserve the stratification of air, which reduces convective heat transfer to the heat flux meter sensing surface.

© ISO 2013 – All rights reserved
Documents
Document Sharing Hub
Full document details: BS ISO 14934-2:2013