BS ISO 14934-4:2014

BSI Standards Publication

Fire tests — Calibration and use of heat flux meters

Part 4: Guidance on the use of heat flux meters in fire tests

bsi.

...making excellence a habit.™

Document Sharing Hub

Full document details: BS ISO 14934-4:2014

National foreword

This British Standard is the UK implementation of ISO 14934-4:2014. It supersedes DD ISO/TS 14934-4:2007 which is withdrawn.

The UK participation in its preparation was entrusted to Technical Committee FSH/21/-/5, Reaction to fire tests - Heat release and smoke measurement.

A list of organizations represented on this committee can be obtained on request to its secretary.

This publication does not purport to include all the necessary provisions of a contract. Users are responsible for its correct application.

© The British Standards Institution 2014. Published by BSI Standards Limited 2014

ISBN 978 0 580 82022 9

ICS 13.220.40; 13.220.50

Compliance with a British Standard cannot confer immunity from legal obligations.

This British Standard was published under the authority of the Standards Policy and Strategy Committee on 31 August 2014.

Amendments issued since publication

Date	Text affected

Documents
Document Sharing Hub

Full document details: BS ISO 14934-4:2014

INTERNATIONAL STANDARD

ISO 14934-4

First edition
2014-08-15

Fire tests — Calibration and use of heat flux meters —

Part 4: Guidance on the use of heat flux meters in fire tests

Essais au feu — Étalonnage et utilisation des appareils de mesure du flux thermique —

Partie 4: Lignes directrices pour l'utilisation des fluxmètres thermiques dans les essais au feu

Reference number
ISO 14934-4:2014(E)

Documents
Document Sharing Hub

© ISO 2014

Full document details: BS ISO 14934-4:2014

COPYRIGHT PROTECTED DOCUMENT

© ISO 2014

All rights reserved. Unless otherwise specified, no part of this publication may be reproduced or utilized otherwise in any form or by any means, electronic or mechanical, including photocopying, or posting on the internet or an intranet, without prior written permission. Permission can be requested from either ISO at the address below or ISO's member body in the country of the requester.

ISO copyright office
Case postale 56 • CH-1211 Geneva 20
Tel. + 41 22 749 01 11
Fax + 41 22 749 09 47
E-mail copyright@iso.org
Web www.iso.org

Published in Switzerland

© ISO 2014 – All rights reserved

Documents
Document Sharing Hub

Full document details: BS ISO 14934-4:2014

Contents

Page

Foreword ... **iv**
Introduction ... **v**
1 Scope ... **1**
2 Normative references ... **1**
3 Terms and definitions ... **1**
4 General information on heat flux meters ... **1**
4.1 General ... 1
4.2 Principle of measurement ... 2
4.3 Design of heat flux meter ... 3
4.4 Measurement characteristics ... 5
4.5 Physical shape of heat flux meter ... 8
5 Attachments to heat flux meters ... **9**
5.1 Air purging ... 9
5.2 Windows ... 10
5.3 Cooling system ... 11
6 Selection of a suitable heat flux meter ... **12**
6.1 General ... 12
6.2 Range of measurement ... 12
6.3 Type, dimensions and orientation ... 13
6.4 View angle ... 14
6.5 Response time ... 14
6.6 Sensitivity to convective heat transfer ... 14
7 Performing a measurement ... **14**
7.1 Installation ... 14
7.2 Target surface ... 15
7.3 Electronics ... 15
7.4 Relationship between output voltage and total heat flux ... 15
8 Calibration ... **16**
8.1 Secondary standard heat flux meter ... 16
8.2 Working standard heat flux meters ... 16
8.3 Frequency of calibration ... 16
9 Maintenance ... **16**
9.1 Absorber ... 16
9.2 Wiring ... 16
9.3 Water supply ... 16
10 Use of heat flux meters in fire tests ... **16**
10.1 General ... 16
10.2 Ignitability test: ISO 5657 ... 17
10.3 Spread of flame test: ISO 5658 series ... 17
10.4 Heat release, smoke production and mass loss: ISO 5660 series and ISO 17554 ... 18
10.5 Full-scale room test for surface products: ISO 9705 and ISO 13784 series ... 18
10.6 Façade tests: ISO 13785 series ... 18
10.7 Spread of flame test for floor coverings: ISO 9239 series ... 18
10.8 Intermediate-scale heat release calorimeter (ICAL): ISO 14696 ... 18
Bibliography ... **19**

© ISO 2014 – All rights reserved

Documents
Document Sharing Hub
Full document details: BS ISO 14934-4:2014

Foreword

ISO (the International Organization for Standardization) is a worldwide federation of national standards bodies (ISO member bodies). The work of preparing International Standards is normally carried out through ISO technical committees. Each member body interested in a subject for which a technical committee has been established has the right to be represented on that committee. International organizations, governmental and non-governmental, in liaison with ISO, also take part in the work. ISO collaborates closely with the International Electrotechnical Commission (IEC) on all matters of electrotechnical standardization.

The procedures used to develop this document and those intended for its further maintenance are described in the ISO/IEC Directives, Part 1. In particular the different approval criteria needed for the different types of ISO documents should be noted. This document was drafted in accordance with the editorial rules of the ISO/IEC Directives, Part 2 (see www.iso.org/directives).

Attention is drawn to the possibility that some of the elements of this document may be the subject of patent rights. ISO shall not be held responsible for identifying any or all such patent rights. Details of any patent rights identified during the development of the document will be in the Introduction and/or on the ISO list of patent declarations received (see www.iso.org/patents).

Any trade name used in this document is information given for the convenience of users and does not constitute an endorsement.

For an explanation on the meaning of ISO specific terms and expressions related to conformity assessment, as well as information about ISO's adherence to the WTO principles in the Technical Barriers to Trade (TBT) see the following URL: Foreword - Supplementary information

The committee responsible for this document is ISO/TC 92, *Fire safety*, Subcommittee SC 1, *Fire initiation and growth*.

This first edition of ISO 14934-4 cancels and replaces ISO/TS 14934-4:2007, which has been technically revised.

ISO 14934 consists of the following parts, under the general title *Fire tests — Calibration and use of heat flux meters*:

— *Part 1: General principles*

— *Part 2: Primary calibration methods*

— *Part 3: Secondary calibration methods*

— *Part 4: Guidance on the use of heat flux meters in fire tests*

© ISO 2014 – All rights reserved
Documents
Document Sharing Hub
Full document details: BS ISO 14934-4:2014

Introduction

In many fire test methods, the radiation level is specified and, therefore, it is of great importance that the radiative heat flux is well defined and measured with sufficient accuracy. Radiative heat transfer is also the dominant mode of heat transfer in most real fires.

In practice, radiative heat flux is usually measured with so-called total heat flux meters of the Schmidt-Boelter (thermopile) or Gardon (foil) type. Such meters register the combined heat flux by radiation and convection to a cooled surface. The contribution to the heat transfer by convection depends mainly on the temperature difference between the surrounding gases and the sensing surface and on the velocity of the surrounding gases. It will, however, also depend on the size and shape of the heat flux meter, its orientation, and its temperature level, which is near the cooling water temperature. In many practical situations in fire testing, the contribution due to convection to the sensing surface of the instrument can amount to 25 % of the heat flux. Therefore, it is always necessary to determine and control this part.

To determine the fraction of total heat flux due to radiation, a calibration scheme has been developed where primary calibration is performed on two different types of heat flux meters: (1) a total hemispherical radiometer sensitive to radiation only, and (2) a total heat flux meter (most frequently used) sensitive to both radiant heat transfer and convective heat transfer.

When using heat flux meters, it is important to realize that, provided that convective heat transfer is kept to a minimum, only incident radiant heat flux can be measured directly. The net radiant heat flux as well as the heat transfer by convection to a body depend on, among other things, the temperature of the receiving surface, while the instrument responds to heat transfer to a cooled surface.

This part of ISO 14934 provides guidance on how this type of instrument is used and how the results are interpreted.

© ISO 2014 – All rights reserved

Documents
Document Sharing Hub
Full document details: BS ISO 14934-4:2014

Documents
Document Sharing Hub

Full document details: BS ISO 14934-4:2014

INTERNATIONAL STANDARD ISO 14934-4:2014(E)

Fire tests — Calibration and use of heat flux meters —

Part 4: Guidance on the use of heat flux meters in fire tests

1 Scope

This part of ISO 14934 provides guidance on the use of heat flux meters in fire testing applications, including the description and working principles of common heat flux meters and methods for their selection and maintenance. The guidance can also be applied to measuring heat flux from radiant panels and other large heat sources used to simulate the heat flux from a fire. It is applicable for all common testing purposes when measuring heat flux from radiant sources.

This part of ISO 14934 also provides basic theory and working principles of heat flux meters and methods for selection, use, and maintenance of heat flux meters. Although it is particularly aimed at the application of heat flux meters in fire tests and experimental works of fire research, it can also serve as a guide for other research applications like research of boilers, combustion processes, etc.

Instruments, which measure the transient temperature of a solid body of known mass and heat capacity to infer the heat flux (slug calorimeter type), are not covered by this part of ISO 14934.

2 Normative references

The following referenced documents are indispensable for the application of this document. For dated references, only the edition cited applies. For undated references, the latest edition of the referenced document (including any amendments) applies.

ISO 13943, *Fire safety — Vocabulary*

ISO 14934-1, *Fire tests — Calibration and use of heat flux meters — Part 1: General principles*

ISO 14934-2, *Fire tests — Calibration and use of heat flux meters — Part 2: Primary calibration methods*

ISO 14934-3, *Fire tests — Calibration and use of heat flux meters — Part 3: Secondary calibration method*

3 Terms and definitions

For the purposes of this document, the terms and definitions given in ISO 13943 and ISO 14934-1 apply.

4 General information on heat flux meters

4.1 General

A heat flux meter is an instrument which measures the radiant and convective heat that is transferred from the fire environment to a sensing element. In practice, heat flux is most commonly measured with total heat flux meters of the Schmidt-Boelter (thermopile) or Gardon (foil) type. Although there are a wide variety of designs of heat flux meters, a typical design consists of a thermopile sensor, mounted on a metal body that is cooled by water. The body acts as a constant temperature heat sink. The thermopile sensor typically has a nearly black surface which is assumed to absorb all incident radiation, or which emissivity is given.

© ISO 2014 – All rights reserved

Documents
Document Sharing Hub
Full document details: BS ISO 14934-4:2014

It is assumed that sensitivity does not depend on wavelength over the spectral range of the radiating sources. Deviations from the ideal directional response characteristics may normally be also disregarded.

In a normal situation, the field of view is assumed to be 2π sr and the surface is assumed to be a perfect blackbody, both regarding the spectral characteristics and the directional response.

In general, heat flux meters consist of an absorber of heat flux, body, water-cooling system, and wiring as shown in Figure 1. They often also have a flange for mounting purposes.

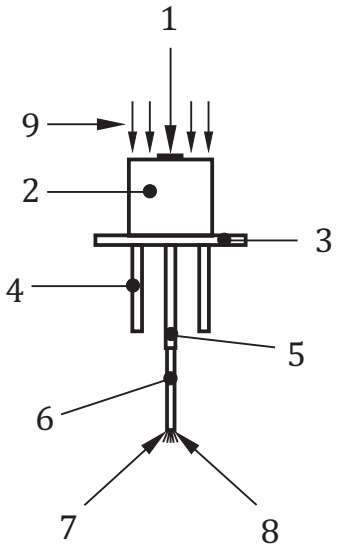

Key

1 absorber
2 body
3 flange
4 tube for water supply
5 tube for wiring
6 cable
7 heat flux meter signal
8 temperature sensor signal
9 incident heat flux

Figure 1 — General features of heat flux meters

The sensing surface shall remain free of deposition of soot or other particulates. It should be noted that soot may accumulate on the cool gauge surface and can affect the gauge output.

4.2 Principle of measurement

The incident heat flux onto the absorber creates a local temperature difference. This difference is measured, resulting in an output signal (voltage). As a first approximation, this voltage is linear with the heat flux received by the sensor. In most heat flux meters, the measurement of the temperature difference is based on thermocouples or thermopiles, which are passive and do not require any external power.

Within a limited working range, the relationship between the heat flux received by the sensor and the output signal can be assumed to be linear. However, it should be noted that the output signal is not always linear to the incident heat flux (see 4.4.3).

© ISO 2014 – All rights reserved
Documents
Document Sharing Hub
Full document details: BS ISO 14934-4:2014