BS ISO 14966:2019

BSI Standards Publication

Ambient air — Determination of numerical concentration of inorganic fibrous particles — Scanning electron microscopy method

Documents
Document Sharing Hub

Full document details: BS ISO 14966:2019

National foreword

This British Standard is the UK implementation of ISO 14966:2019. It supersedes BS ISO 14966:2002, which is withdrawn.

The UK participation in its preparation was entrusted to Technical Committee EH/2/3, Ambient atmospheres.

A list of organizations represented on this committee can be obtained on request to its secretary.

This publication does not purport to include all the necessary provisions of a contract. Users are responsible for its correct application.

© The British Standards Institution 2019
Published by BSI Standards Limited 2019

ISBN 978 0 539 00356 7

ICS 13.040.20

Compliance with a British Standard cannot confer immunity from legal obligations.

This British Standard was published under the authority of the Standards Policy and Strategy Committee on 31 December 2019.

Amendments/corrigenda issued since publication

Date	Text affected

Documents
Document Sharing Hub

Full document details: BS ISO 14966:2019

INTERNATIONAL STANDARD

ISO 14966

Second edition
2019-12

Ambient air — Determination of numerical concentration of inorganic fibrous particles — Scanning electron microscopy method

Air ambiant — Détermination de la concentration en nombre des particules inorganiques fibreuses — Méthode par microscopie électronique à balayage

Reference number
ISO 14966:2019(E)

Documents
Document Sharing Hub

© ISO 2019

Full document details: BS ISO 14966:2019

COPYRIGHT PROTECTED DOCUMENT

© ISO 2019

All rights reserved. Unless otherwise specified, or required in the context of its implementation, no part of this publication may be reproduced or utilized otherwise in any form or by any means, electronic or mechanical, including photocopying, or posting on the internet or an intranet, without prior written permission. Permission can be requested from either ISO at the address below or ISO's member body in the country of the requester.

ISO copyright office
CP 401 • Ch. de Blandonnet 8
CH-1214 Vernier, Geneva
Phone: +41 22 749 01 11
Fax: +41 22 749 09 47
Email: copyright@iso.org
Website: www.iso.org

Published in Switzerland

© ISO 2019 – All rights reserved

Documents
Document Sharing Hub

Full document details: BS ISO 14966:2019

Contents

Page

Foreword ..... **v**
Introduction ..... **vi**
1 Scope **1**
2 Normative references **1**
3 Terms and definitions **1**
4 Abbreviated terms **4**
5 Principle **4**
6 Apparatus and materials **4**
6.1 Air sampling 4
6.1.1 Sampling head 4
6.1.2 Sampling train 5
6.1.3 Sampling pump 5
6.1.4 Needle valve 6
6.1.5 Volumetric flowmeter (rotameter) 6
6.1.6 Timer 6
6.1.7 Dry type gas meter (optional) 6
6.1.8 Meteorological instruments (optional) 6
6.1.9 Instruments for unattended sampling (optional) 7
6.2 Preparation of filters 7
6.2.1 Vacuum evaporator 7
6.2.2 Plasma asher 8
6.3 Sample analysis 8
6.3.1 Scanning electron microscope (SEM) 8
6.3.2 Energy-dispersive X-ray system 8
6.3.3 Stereo-microscope 9
6.3.4 Gold-coated capillary-pore polycarbonate filters 9
6.3.5 Backing filters 9
6.3.6 Disposable plastic field monitors (optional) 9
6.3.7 Technically pure oxygen 9
6.3.8 Rubber connecting hoses 9
6.3.9 Filter containers 9
6.3.10 Routine electron microscopy tools and supplies 9
6.3.11 Sample for resolution adjustment 9
6.3.12 Sample for magnification calibration 10
7 Air sample collection and analysis **10**
7.1 Measurement planning 10
7.2 Collection of air samples 10
7.3 SEM specimen preparation 13
7.4 Analysis in the scanning electron microscope 13
7.4.1 General instructions 13
7.4.2 Fibre-counting criteria 14
7.4.3 Fibre classification 19
7.4.4 Analysis using reference spectra and peak height ratios 26
7.4.5 Measurement of fibre dimensions 28
7.4.6 Recording of data on the fibre counting form 28
8 Calculation of results **28**
8.1 Calculation of the mean fibre concentration 28
8.2 Calculation of the 95 % confidence interval 30
9 Performance characteristics **30**
9.1 General 30
9.2 Measurement uncertainty 30

AVA Documents
Document Sharing Hub

© ISO 2019 – All rights reserved

Full document details: BS ISO 14966:2019

9.2.1 Systematic errors ... 30
9.2.2 Random errors ... 30
9.2.3 Errors due to sampling ... 31
9.2.4 Errors associated with the SEM examination ... 31
9.2.5 Total error of the measurement ... 31
9.2.6 Random errors due to fibre counting ... 32
9.3 Limit of detection ... 34

10 Test report ... 35

Annex A (normative) **Preparation of filters for air sampling ... 37**

Annex B (normative) **Procedures for calibration and adjustment of the SEM ... 38**

Annex C (informative) **Characteristics and chemical composition of inorganic fibres ... 40**

Annex D (informative) **Poisson variability as a function of fibre density on sampling filter and area of filter analysed ... 45**

Annex E (informative) **Combination of the results from multiple samples ... 47**

Bibliography ... 48

© ISO 2019 – All rights reserved

Documents
Document Sharing Hub
Full document details: BS ISO 14966:2019

Foreword

ISO (the International Organization for Standardization) is a worldwide federation of national standards bodies (ISO member bodies). The work of preparing International Standards is normally carried out through ISO technical committees. Each member body interested in a subject for which a technical committee has been established has the right to be represented on that committee. International organizations, governmental and non-governmental, in liaison with ISO, also take part in the work. ISO collaborates closely with the International Electrotechnical Commission (IEC) on all matters of electrotechnical standardization.

The procedures used to develop this document and those intended for its further maintenance are described in the ISO/IEC Directives, Part 1. In particular, the different approval criteria needed for the different types of ISO documents should be noted. This document was drafted in accordance with the editorial rules of the ISO/IEC Directives, Part 2 (see www.iso.org/directives).

Attention is drawn to the possibility that some of the elements of this document may be the subject of patent rights. ISO shall not be held responsible for identifying any or all such patent rights. Details of any patent rights identified during the development of the document will be in the Introduction and/or on the ISO list of patent declarations received (see www.iso.org/patents).

Any trade name used in this document is information given for the convenience of users and does not constitute an endorsement.

For an explanation of the voluntary nature of standards, the meaning of ISO specific terms and expressions related to conformity assessment, as well as information about ISO's adherence to the World Trade Organization (WTO) principles in the Technical Barriers to Trade (TBT) see www.iso.org/iso/foreword.html.

This document was prepared by Technical Committee ISO/TC 146, *Air quality*, Subcommittee SC 3, *Ambient atmospheres*.

This second edition cancels and replaces the first edition (ISO 14966:2002), which has been technically revised. It also incorporates the corrected version ISO 14699:2002/Cor 1:2007. The main changes compared to the previous edition are as follows:

— Counting rules, changed to the recommended method (membrane filter method) of the WHO (World Health Organization);

— Analytical procedure (classification), using normalized peak height ratios in addition to the method of the previous edition;

— Rule for early termination of filter evaluation (counting and analysis). A formula is given to terminate the filter evaluation, if the calculated (asbestos) fibre concentration is above a set limit value for this fibre concentration.

Any feedback or questions on this document should be directed to the user's national standards body. A complete listing of these bodies can be found at www.iso.org/members.html.

© ISO 2019 – All rights reserved

Documents
Document Sharing Hub
Full document details: BS ISO 14966:2019

Introduction

This document describes a method for measurement of the numerical concentration of inorganic fibrous particles in ambient air using the scanning electron microscope. This document is based on VDI 3492[1].

The method is also suitable for determining the numerical concentrations of inorganic fibres in the interior atmospheres of buildings, for example measurement of residual airborne fibre concentrations after the removal of asbestos-containing building materials.

Biological research has shown that the fibrogenic or carcinogenic effect of a fibre is related to its length, diameter and its resistance to dissolution in a biological environment. The point at which fibres are too short, too thick or of insufficient durability to produce a fibrogenic or carcinogenic effect is uncertain. Fibres with lengths greater than 10 µm and diameters of a few tenths of 1 µm, which also have durabilities such that they remain unchanged for many years in the body, are regarded as particularly carcinogenic. Based on current knowledge, fibres shorter than 5 µm are thought to have a lower carcinogenic potential[2]–[5].

For the purposes of this document, a fibre is defined as a particle which has a minimum length to width (aspect) ratio of 3:1. Fibres with lengths greater than 5 µm and widths extending from the lower limit of visibility up to 3 µm are counted. Fibres with diameters less than 3 µm are considered to be respirable. Since the method requires recording the lengths and widths of all fibres, the data can be re-evaluated if it is required to derive concentrations for fibres with a higher minimum aspect ratio[6].

The range of concentration to be measured extends from that found in clean air environments, in which the mean value of a large number of individual measurements of asbestos fibre concentrations has been found to be generally lower than 100 fibres/m^3 (fibres longer than 5 µm), up to higher exposure scenarios in which concentrations as much as two orders of magnitude higher have been found[4][6].

This method is used to measure the numerical concentration of inorganic fibres with widths smaller than 3 µm and lengths exceeding 5 µm up to a maximum of 100 µm. Using energy-dispersive X-ray analysis (EDXA), fibres are classified as fibres with compositions consistent with those of asbestos fibres, calcium sulfate fibres and other inorganic fibres.

Calcium sulfate fibres are separated from other inorganic fibres and are not included in the final result, because on the basis of current knowledge, they do not represent any health hazard. Nevertheless, the numerical concentration of calcium sulfate fibres should be determined, since a high concentration of these fibres can negatively bias the results for probable asbestos fibres, and in some circumstances the sample may have to be rejected[7]. In addition, knowledge of the numerical concentration of calcium sulfate fibres is of importance in the interpretation of fibre concentrations in ambient atmospheres.

Detection and identification of fibres becomes progressively more uncertain as the fibre width is reduced below 0,2 µm. Identification of a fibre as a specific species is more confident if the source of emission is known or suspected, such as in a building for which bulk materials are available for analysis.

In order to facilitate the scanning electron microscope examination, organic particles collected on the filter are almost completely removed by a plasma ashing treatment.

Except in situations where fibre identification is difficult, there should be only minor differences between fibre counting results obtained by this method and those obtained using the procedures for determination of PCM-equivalent fibres in Annex E of the transmission electron microscopy method ISO 10312[8].

© ISO 2019 – All rights reserved
Documents
Document Sharing Hub
Full document details: BS ISO 14966:2019

Ambient air — Determination of numerical concentration of inorganic fibrous particles — Scanning electron microscopy method

1 Scope

This document specifies a method using scanning electron microscopy for determination of the concentration of inorganic fibrous particles in the air. The method specifies the use of gold-coated, capillary-pore, track-etched membrane filters, through which a known volume of air has been drawn. Using energy-dispersive X-ray analysis, the method can discriminate between fibres with compositions consistent with those of the asbestos varieties (e.g. serpentine and amphibole), gypsum, and other inorganic fibres. Annex C provides a summary of fibre types which can be measured.

This document is applicable to the measurement of the concentrations of inorganic fibrous particles in ambient air. The method is also applicable for determining the numerical concentrations of inorganic fibrous particles in the interior atmospheres of buildings, for example to determine the concentration of airborne inorganic fibrous particles remaining after the removal of asbestos-containing products.

The range of concentrations for fibres with lengths greater than 5 µm, in the range of widths which can be detected under standard measurement conditions (see 7.2), is approximately 3 fibres to 200 fibres per square millimetre of filter area. The air concentrations, in fibres per cubic metre, represented by these values are a function of the volume of air sampled.

The ability of the method to detect and classify fibres with widths lower than 0,2 µm is limited. If airborne fibres in the atmosphere being sampled are predominantly <0,2 µm in width, a transmission electron microscopy method such as ISO 10312[8] can be used to determine the smaller fibres.

2 Normative references

There are no normative references in this document.

3 Terms and definitions

For the purposes of this document, the following terms and definitions apply.

3.1
acicular
shape shown by an extremely slender crystal with cross-sectional dimensions which are small relative to its length, i.e. needle-like

3.2
amphibole
any of a group of rock-forming double-chain silicate minerals, closely related in crystal form and composition, and having the nominal formula:

$$A_{0\text{-}1}B_2C_5T_8O_{22}(OH,F,Cl)_2$$

where

© ISO 2019 – All rights reserved

Documents
Document Sharing Hub
Full document details: BS ISO 14966:2019

A = K, Na;

B = Fe^{2+}, Mn, Mg, Ca, Na;

C = Al, Cr, Ti, Fe^{3+}, Mg, Fe^{2+};

T = Si, Al, Cr, Fe^{3+}, Ti

Note 1 to entry: In some varieties of amphibole, these elements can be partially substituted by Li, Pb, or Zn. Amphibole is characterized by a cross-linked double chain of Si-O tetrahedra with a silicon: oxygen ratio of 4:11, by columnar or fibrous prismatic crystals and by good prismatic cleavage in two directions parallel to the crystal faces and intersecting at angles of about 56° and 124°.

3.3
amphibole asbestos
amphibole (3.2) in an *asbestiform* (3.5) *habit* (3.17)

3.4
analytical sensitivity
calculated airborne *fibre* (3.13) concentration equivalent to counting one fibre in the analysis

Note 1 to entry: The analytical sensitivity is expressed in fibres per cubic metre.

Note 2 to entry: This method does not specify a unique analytical sensitivity. The analytical sensitivity is determined by the needs of the measurement and the conditions found on the prepared sample.

3.5
asbestiform
specific type of mineral fibrosity in which the *fibres* (3.13) and fibrils possess high tensile strength and flexibility

3.6
asbestos
any of a group of silicate minerals belonging to the serpentine and *amphibole fibres* (3.2) groups which have crystallized in the *asbestiform* (3.5) *habit* (3.17), causing them to be easily separated into long, thin, flexible, strong *fibres* (3.13) when crushed or processed

Note 1 to entry: The Chemical Abstracts Service Registry Numbers of the most common asbestos varieties are: chrysotile (12001-29-5), crocidolite (12001-28-4), grunerite asbestos (amosite) (12172-73-5), anthophyllite asbestos (77536-67-5), tremolite asbestos (77536-68-6) and actinolite asbestos (77536-66-4).

3.7
aspect ratio
ratio of length of a particle to its width

3.8
chrysotile
fibrous variety of the mineral serpentine, which has the nominal composition:

$$Mg_3Si_2O_5(OH)_4$$

Note 1 to entry: Most natural chrysotile deviates little from this nominal composition. In some varieties of chrysotile, minor substitution of silicon by Al_3+ can occur. Minor substitution of magnesium by Al^{3+}, Fe^{2+}, Fe^{3+}, Ni^{2+}, Mn^{2+} and Co^{2+} can also be present. Chrysotile is the most prevalent type of asbestos.

3.9
cleavage
breaking of a mineral along one of its crystallographic directions

© ISO 2019 – All rights reserved
Documents
Document Sharing Hub
Full document details: BS ISO 14966:2019

3.10
cluster
fibrous structure in which two or more *fibres* (3.13), or *fibre bundles* (3.14) are randomly oriented in a connected grouping

3.11
countable fibre
any object longer than 5 µm, having a maximum width less than 3 µm and a minimum aspect ratio of 3:1

3.12
energy-dispersive X-ray analysis
measurement of the energies and intensities of X-rays by use of a solid-state detector and multi-channel analyser system

3.13
fibre
elongated particle which has parallel or stepped sides and a minimum aspect ratio of 3:1

3.14
fibre bundle
structure composed of apparently attached, parallel *fibres* (3.13)

Note 1 to entry: A fibre bundle can exhibit diverging fibres at one or both ends. The length is defined as equal to the maximum length of the structure, and the diameter is defined as equal to the maximum width in the compact region.

3.15
fibril
single *fibre* (3.13) of asbestos which cannot be further separated longitudinally into smaller components without losing its fibrous properties or appearances

3.16
fibrous structure
fibre (3.13), or connected grouping of fibres, with or without other particles

3.17
habit
the characteristic crystal growth form or combination of these forms of a mineral, including characteristic irregularities

3.18
image field
the area on the filter sample which is shown on the screen

3.19
limit of detection
calculated airborne *fibre* (3.13) concentration equivalent to the upper 95 % confidence limit of 2,99 fibres predicted by the Poisson distribution for a count of zero fibres

Note 1 to entry: The limit of detection is expressed in fibres per cubic metre.

3.20
magnification
ratio of the size of the image of an object on the observation screen to the actual size of the object

Note 1 to entry: For the purposes of this document, magnification values always refer to that applicable to the observation screen.

3.21
matrix
structure in which one or more *fibres* (3.13) or *fibre bundles* (3.14) touch, are attached to, or partially concealed by a single particle or connected group of non-fibrous particle

AVA Documents
Document Sharing Hub

© ISO 2019 – All rights reserved

Full document details: BS ISO 14966:2019

3.22
serpentine
any of a group of common rock-forming minerals having the nominal formula:

$Mg_3Si_2O_5(OH)_4$

3.23
split fibre
agglomeration of *fibres* (3.13) which, at one or several points along its length, appears to be compact and undivided, whilst at other points appears to separate into separate fibres

3.24
structure
single *fibre* (3.13), *fibre bundle* (3.14), *cluster* (3.10)or matrix

4 Abbreviated terms

EDXA	Energy-dispersive X-ray analysis
FWHM	Full width, half maximum
PTFE	Polytetrafluoroethylene
SEM	Scanning electron microscope

5 Principle

A sample of airborne particulate is collected by drawing a measured volume of air through a gold-coated, capillary pore track-etched membrane filter with a maximum nominal pore size of 0,8 µm, which is subsequently examined in the scanning electron microscope (SEM). Before analysis, the gold-coated filter is treated in a plasma asher to remove organic particles, to the extent that this is possible. The individual fibrous particles and constituent fibres in a randomly-selected area of the filter are then counted at a magnification of approximately 2 000×. If a fibre is detected at the magnification of approximately 2 000×, it is examined at a higher magnification of approximately 10 000× to measure its dimensions. At the higher magnification of approximately 10 000×, energy-dispersive X-ray analysis (EDXA) is used to classify the fibre according to the chemical composition.

The limit of detection for this method is defined as the numerical fibre concentration below which, with 95 % confidence, the actual concentration lies when no fibres are found during the SEM examination. The limit of detection theoretically can be lowered indefinitely by filtration of progressively larger volumes of air and by examination of a larger area of the specimen in the SEM. In practice, the lowest achievable limit of detection for a particular area of SEM specimen examined is controlled by the total suspended particulate concentration remaining after the plasma ashing step.

A limit of detection of approximately 300 fibres/m^3 is obtained if an air volume of 1 m^3 per square centimetre of filter surface area passes through the filter, and an area of 1 mm^2 of the filter area is examined in the SEM. This corresponds to an evaluated sample air volume of 0,01 m^3.

6 Apparatus and materials

6.1 Air sampling

6.1.1 Sampling head

A disposable, 3-piece, conductive plastic field monitor cassette may be used as the sampling head, provided that the design is such that significant leakage around the filter does not occur. A re-usable

© ISO 2019 – All rights reserved
Documents
Document Sharing Hub
Full document details: BS ISO 14966:2019

unit may also be used as the sampling head, consisting of a cylindrical cowl and a filter holder with backing filter. Figure 1 shows an example of a suitable sampling head. The cowl and the filter holder should be made from a corrosion-resistant material. The filter shall be clamped in such a manner that significant leaks around the filter do not occur at differential pressures up to approximately 50 kPa as described in B.4. The length of the cowl should be 0,5 to 2,5 times the effective filter diameter (the diameter of the exposed circular filter area through which the air is drawn). If it is possible that wind velocities greater than 5 m/s could occur during sampling, use a long cowl with a ratio of length to effective diameter of 2,5.

6.1.2 Sampling train

Figure 2 shows an example of a suitable sampling train. Control of the volumetric flowrate can be achieved either by the use of a throttle valve (3) or a volumetric flow controller (8) in conjunction with a regulator valve (4).

6.1.3 Sampling pump

Pulse-free or pulsation-damped, capable of maintaining, at a pressure differential across the filter of at least 50 kPa, a volumetric flow of between 8 l/min and 30 l/min, depending on the diameter of filter used.

In order to achieve the required analytical sensitivity, a flowrate of 8 l/min is required if a 25 mm diameter filter is used. This flowrate is equivalent to a filter face velocity of approximately 35 cm/s. The sampling pump shall be capable of maintaining the intended flowrate within ±10 % throughout the whole sampling period.

© ISO 2019 – All rights reserved

Documents
Document Sharing Hub
Full document details: BS ISO 14966:2019

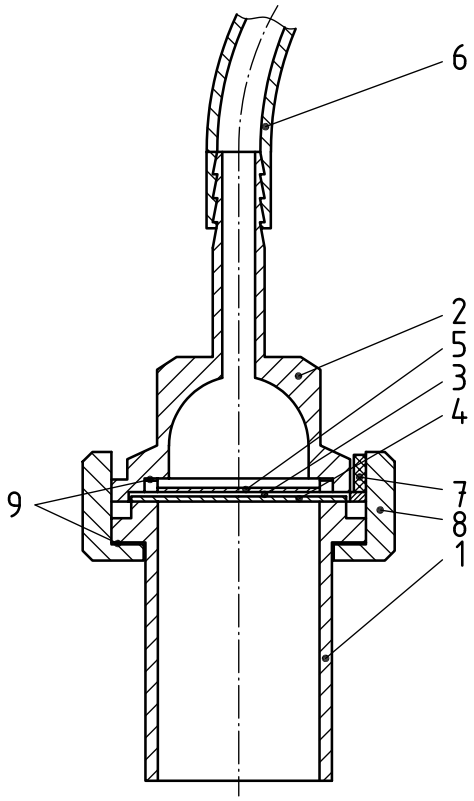

Key

1	cowl	6	suction hose
2	filter holder	7	clamping roller
3	backing filter	8	clamping ring
4	track-etched membrane filter	9	PTFE gaskets
5	supporting mesh		

Figure 1 — Example of design of sampling head

6.1.4 Needle valve

With a fine adjustment mechanism, for setting the volumetric flowrate.

6.1.5 Volumetric flowmeter (rotameter)

For measuring the volumetric flowrate.

6.1.6 Timer

For measuring the sampling time.

6.1.7 Dry type gas meter (optional)

For volumetric measurement, calibrated, designed for a maximum volumetric flowrate of 2 m^3/h.

6.1.8 Meteorological instruments (optional)

For recording of meteorological conditions during sampling. Instruments such as a thermometer, a hygrometer, a barometer and a wind speed and direction recorder will be required.

© ISO 2019 – All rights reserved
Documents
Document Sharing Hub
Full document details: BS ISO 14966:2019

6.1.9 Instruments for unattended sampling (optional)

For unattended sampling, a volumetric flow controller is required for regulation of the flowrate to within ±10 % of the nominal rate, with an automatic switch to turn off the sampling pump if the flowrate exceeds or falls below the pre-set tolerance band. The flow controller can be integrated into the suction unit.

A programmable switch is required for pre-setting the air sampling cycle. A pressure gauge which incorporates a switching contact is required to switch off the sampling pump if the pressure differential across the sampling filter increases to a pre-set value.

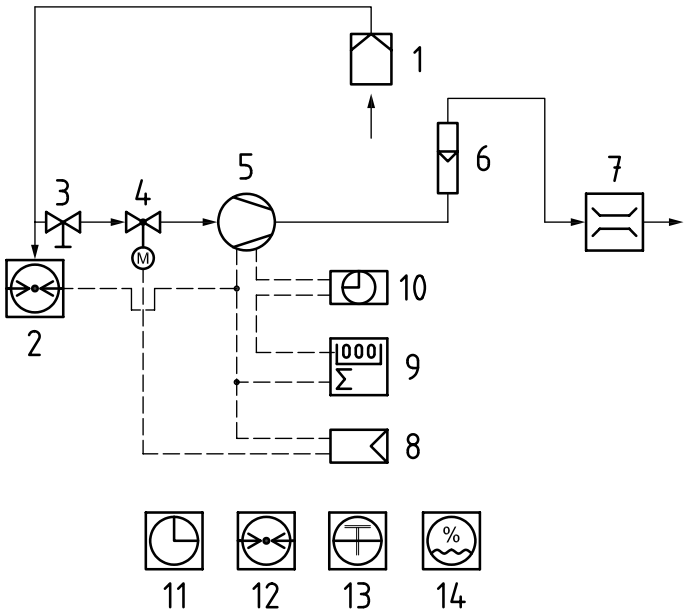

Key

1 sampling head or cassette
2 pressure gauge
3 throttle valve (optional)
4 regulator valve (optional)
5 pump
6 variable-area flowmeter
7 gas meter (optional) with thermometer
8 volumetric flow controller (optional)
9 sampling-time recorder (optional)
10 programmer (optional)
11 timer
12 thermometer (optional)
13 barometer (optional)
14 hygrometer (optional)

Figure 2 — Example of a suitable sampling train

6.2 Preparation of filters

6.2.1 Vacuum evaporator

Capable of producing a vacuum better than 0,013 Pa.

A vacuum coating unit is required for vacuum deposition of gold onto the capillary-pore membrane filters, and for carbon coating of SEM specimens if the particulate loading is such that excessive charging of the specimen occurs.

A sputter coating unit has also been found to meet the requirements for gold coating of the capillary-pore filters.

© ISO 2019 – All rights reserved

Documents
Document Sharing Hub
Full document details: BS ISO 14966:2019

6.2.2 Plasma asher

Supplied with oxygen, to oxidize organic particles on the SEM specimen.

An example of the configuration of a suitable plasma asher is shown in Figure 3. The chamber of the plasma asher may be coupled either capacitatively or inductively. Care shall be taken not to damage the specimen during the plasma ashing process. A calibration procedure to determine suitable operating conditions for the plasma asher is described in B.3.

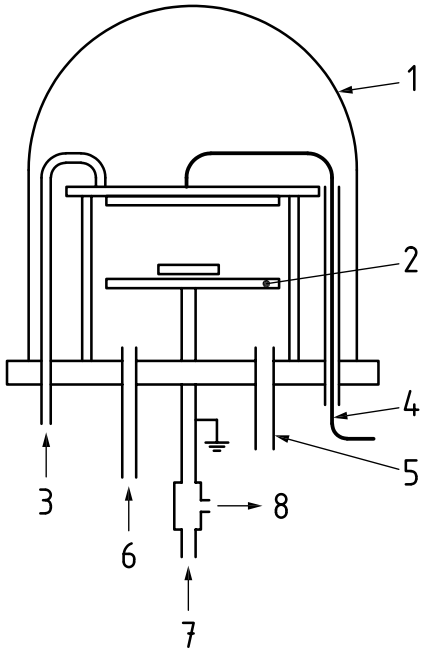

Key

1	bell jar	5	connection for vacuum pump
2	filter in mounting ring	6	air inlet
3	oxygen inlet	7	cooling-water inlet
4	power supply from plasma generator	8	cooling-water outlet

Figure 3 — Example of a configuration of a plasma asher

6.3 Sample analysis

6.3.1 Scanning electron microscope (SEM)

With an accelerating voltage of at least 15 kV, is required for fibre counting and identification.

6.3.2 Energy-dispersive X-ray system

For the SEM, capable of achieving a resolution better than 140 eV (FWHM) on the MnK_{α} peak.

The performance of an individual combination of SEM and solid-state X-ray detector is dependent on a number of geometrical factors. Accordingly, the required performance of the combination of the SEM and X-ray analyser is specified in terms of the measured X-ray intensity obtained from a chrysotile fibre of width 0,2 µm, under the operating conditions used during the analysis. Solid-state X-ray detectors are least sensitive in the low energy region, and so detection of sodium in crocidolite is an additional performance criterion.

The instrumental combination shall satisfy the minimum requirements with regard to the visibility of fibres, as specified in 7.4.1, and identification of the fibres, as specified in 7.4.3.

© ISO 2019 – All rights reserved
Documents
Document Sharing Hub
Full document details: BS ISO 14966:2019

6.3.3 Stereo-microscope

With a magnification of approximately 20×, for visual examination of the particulate deposit on the filter.

6.3.4 Gold-coated capillary-pore polycarbonate filters

Maximum nominal pore size 0,8 µm, for collection of air samples. The gold coating shall be approximately 30 nm thick applied to the shiny side of the filter. The procedure for preparation of the gold-coated filters is described in Annex A.

NOTE Optionally, a 20 nm thick layer of gold can be evaporated on to the reverse side of the filter. This coating serves to protect the filter during plasma ashing and can help to improve the contrast of fibres in the SEM image.

6.3.5 Backing filters

Cellulose ester membrane, or absorbent pads, with a porosity of approximately 5 µm to be used as diffusing filters behind the sample collection filters.

6.3.6 Disposable plastic field monitors (optional)

If disposable plastic field monitors are used, they shall consist of 25 mm to 50 mm diameter, three-piece cassettes, which conform to the requirements of 6.1.1. The cassette shall be loaded with a gold-coated, capillary-pore polycarbonate filter of maximum nominal pore size 0,8 µm, backed by a cellulose ester filter of 5 µm porosity or an absorbent pad. Suitable precautions shall be taken to ensure that the filters are tightly clamped in the assembly so that significant air leakage around the filter cannot occur.

Re-use of disposable plastic field monitors is not recommended.

6.3.7 Technically pure oxygen

For operation of the plasma asher.

6.3.8 Rubber connecting hoses

For connecting the sampling head to the pump, and other equipment in the sampling train.

The hose shall have a wall thickness such that it does not collapse under a vacuum of 50 kPa. Silicone rubber hose has been found to meet the requirements.

6.3.9 Filter containers

For transport and storage of filters if disposable field monitors are not used.

6.3.10 Routine electron microscopy tools and supplies

Fine point tweezers, scalpel holders and blades, double-coated adhesive tape, SEM specimen stubs and colloidal carbon paint and other routine supplies are required. If a vacuum evaporator is used for preparation of gold-coated filters, gold wire and tungsten filaments are required. For carbon evaporation, spectroscopically pure carbon rods and a means of sharpening the rods is required.

6.3.11 Sample for resolution adjustment

A gold-coated polycarbonate filter, on which chrysotile fibres with a width of ≥0,2 µm have been deposited, is required for adjustment of the operating conditions of the SEM.

© ISO 2019 – All rights reserved

Documents
Document Sharing Hub
Full document details: BS ISO 14966:2019

6.3.12 Sample for magnification calibration

A test sample is required to calibrate the magnification of the SEM. The magnification standard SRM484e (U.S. National Institute of Standards and Technology) is an example of a sample which meets the requirement.

7 Air sample collection and analysis

7.1 Measurement planning

When determining the spatial and temporal scope of the measurements, it is important to take into consideration the special aspects of the situation. It is therefore essential to define the objective of the measurements before samples are collected. Any available information on emission sources, meteorological conditions and the local situation should be taken into account in order to obtain the maximum information from the measurements. The number of individual measurements to be made should be selected according to the particular task. In particular, prior to collection of the samples, the required accuracy for the mean concentration of the inorganic fibres should be specified, since the error of each individual measurement needs to be taken into consideration in determining the number of samples to be collected. Measurement uncertainty is discussed in Clause 9.

7.2 Collection of air samples

Figure 2 shows an example of a sampling train. Position the sampling head approximately 1,5 m above ground level.

If a re-usable sampling head is used, place a 5 µm porosity cellulose ester backing filter on to the filter support in the sampling head. Place a gold-coated filter on top of the backing filter, with the shiny side facing into the direction of the airflow. Clamp the filters in the sampling head so that the gold-coated filter lies flush against the backing filter and is tightly fitted. Ensure that damage does not occur to the filter during clamping, and that the filter is not twisted.

Before air sampling is commenced, perform a brief test with the tube to the sampling head closed, to determine if any leaks exist in the complete sampling system. Under the conditions of this test, the flowrate indicated by the volumetric flowmeter shall be less than 10 % of the unimpeded flowrate. Open the tube only after the pump has been switched off, in order to avoid sudden pressure surges.

Leaks around the filter can also occur if the filter is inadequately sealed on the low-pressure side, or if the filter has been damaged. Observation of a lower differential pressure at the start of the air sampling indicates that a serious leak exists. If, after sampling, particulate deposits are observed around the edge of the backing filter or on the unexposed edges of the sampling filter, a leak around the filter has occurred and the sample shall be rejected.

When sampling is to be commenced, start the pump and the timer simultaneously.

Within 2 min of the start of sampling, adjust the volume flowrate to approximately 2 l/min per square centimetre of effective filter area (this value shall not vary by more than ±10 % for the period of sampling). This corresponds to a filter loading of 1 000 l per square centimetre of effective filter area over a sampling period of approximately 8 h. Sampling in an environment with high dust concentrations in the air, the loading of particulate material on the sample collection filter can be too high for adequate analysis after 8 h sampling. In such cases, it is permissible to use a shorter sampling time.

At the end of the sampling period, switch off the sampling apparatus. If a programmer was used, confirm that the sampler operated within the required parameters for the preset sampling period. Taking care not to disturb the particulate deposits on the filter surface, remove the sample collection filter and store it upright in a dust-tight sample container.

Record all sampling data which can be of significance for later interpretation. An example of a form for recording of air sampling data is shown in Figure 4. The location of the sampling apparatus shall be documented in the form of a sketch and, if possible, a photograph.

© ISO 2019 – All rights reserved
Documents
Document Sharing Hub
Full document details: BS ISO 14966:2019