BS ISO 15082:2016

BSI Standards Publication

Road vehicles — Tests for rigid plastic safety glazing materials

Documents
Document Sharing Hub

Full document details: BS ISO 15082:2016

National foreword

This British Standard is the UK implementation of ISO 15082:2016.

The UK participation in its preparation was entrusted to Technical Committee AUE/1, Vehicle Lighting & Visibility.

A list of organizations represented on this committee can be obtained on request to its secretary.

This publication does not purport to include all the necessary provisions of a contract. Users are responsible for its correct application.

© The British Standards Institution 2016.
Published by BSI Standards Limited 2016

ISBN 978 0 580 89713 9

ICS 43.040.65; 83.140.01

Compliance with a British Standard cannot confer immunity from legal obligations.

This British Standard was published under the authority of the Standards Policy and Strategy Committee on 30 November 2016.

Amendments/corrigenda issued since publication

Date	Text affected

Documents
Document Sharing Hub

Full document details: BS ISO 15082:2016

INTERNATIONAL STANDARD

ISO 15082

Second edition
2016-11-15

Road vehicles — Tests for rigid plastic safety glazing materials

Véhicules routiers — Essais pour les vitrages de sécurité rigides en matières plastiques

Reference number
ISO 15082:2016(E)

Documents
Document Sharing Hub

© ISO 2016

Full document details: BS ISO 15082:2016

COPYRIGHT PROTECTED DOCUMENT

© ISO 2016, Published in Switzerland

All rights reserved. Unless otherwise specified, no part of this publication may be reproduced or utilized otherwise in any form or by any means, electronic or mechanical, including photocopying, or posting on the internet or an intranet, without prior written permission. Permission can be requested from either ISO at the address below or ISO's member body in the country of the requester.

ISO copyright office
Ch. de Blandonnet 8 • CP 401
CH-1214 Vernier, Geneva, Switzerland
Tel. +41 22 749 01 11
Fax +41 22 749 09 47
copyright@iso.org
www.iso.org

© ISO 2016 – All rights reserved

Documents
Document Sharing Hub

Full document details: BS ISO 15082:2016

Contents

Page

Foreword ... **v**

1 Scope ... **1**

2 Normative references ... **1**

3 Terms and definitions ... **1**

4 Test conditions ... **1**

5 Conditioning of test specimens ... **1**

6 Application of tests ... **2**

7 Optical properties test ... **2**

8 Head-form/fragmentation test ... **2**
8.1 Principle ... 2
8.2 Apparatus ... 2
8.3 Test specimens ... 3
8.4 Procedure ... 4
8.5 Expression of results ... 4

9 Head-form test with deceleration measurement ... **5**
9.1 Principle ... 5
9.2 Test conditions ... 5
9.3 Conditioning of test pieces ... 5
9.4 Apparatus ... 5
9.5 Calibration procedure and adjustment of the head-form ... 11
9.6 Test pieces ... 12
9.7 Test procedure ... 12
9.8 Evaluation ... 13
9.9 Expression of results ... 14

10 Ball test ... **14**
10.1 227 g ball test ... 14
10.1.1 Principle ... 14
10.1.2 Apparatus ... 14
10.1.3 Test specimens ... 15
10.1.4 Procedure ... 15
10.1.5 Expression of results ... 16
10.2 2260 g ball test ... 16
10.2.1 Principle ... 16
10.2.2 Apparatus ... 16
10.2.3 Test specimens ... 16
10.2.4 Procedure ... 16
10.2.5 Expression of results ... 16

11 Abrasion resistance test ... **17**
11.1 Principle ... 17
11.2 Abrasion resistance under dry conditions ... 17
11.2.1 Apparatus ... 17
11.3 Test specimens ... 21
11.4 Standardization of abrading wheels ... 21
11.5 Procedure ... 21
11.5.1 Cleaning ... 22
11.5.2 Conditioning ... 22
11.5.3 Initial haze measurement ... 22
11.5.4 Abrasion ... 22
11.5.5 After abrasion ... 23
11.5.6 Final haze measurement ... 23

AVA Documents
Document Sharing Hub

© ISO 2016 – All rights reserved

Full document details: BS ISO 15082:2016

11.6 Expression of results ... 24
11.7 Abrasion resistance under wet conditions (car wash test) ... 25
11.7.1 Apparatus ... 25
11.7.2 Reagents ... 27
11.7.3 Test specimens ... 27
11.7.4 Procedure ... 28
11.7.5 Expression of results ... 28

12 Cross-cut test ... 28
12.1 Principle ... 28
12.2 Apparatus ... 28
12.3 Test specimens ... 29
12.4 Procedure ... 29
12.5 Expression of results ... 30

13 Chemical resistance test ... 30
13.1 Principle ... 30
13.2 Chemical agents ... 30
13.3 Test specimens ... 30
13.4 Test procedure ... 31
13.5 Expression of results ... 32

14 Resistance to simulated weathering test ... 32
14.1 Principle ... 32
14.2 Exposure apparatus ... 32
14.2.1 Long arc xenon lamp ... 32
14.2.2 Measurements ... 33
14.3 Test specimens ... 33
14.4 Procedure ... 33
14.4.1 Temperature ... 34
14.4.2 Relative humidity ... 34
14.4.3 Water ... 35
14.5 Evaluation ... 35
14.6 Expression of results ... 35
14.7 Report of test parameters ... 35

15 Fire resistance test ... 36
15.1 Principle ... 36
15.2 Apparatus ... 36
15.3 Test specimens ... 36
15.4 Test procedure ... 36
15.5 Expression of results ... 37

Annex A (informative) **Flexibility/rigidity categorization test for plastic safety glazing material ... 38**

Annex B (informative) **Vacuum pick-up nozzle modification ... 39**

Annex C (normative) **Calibration of the washing equipment ... 40**

Annex D (informative) **Calibration verification of Taber abraser ... 42**

Annex E (informative) **Round robin test results to determine values for AS 4000S hard-coated polycarbonate reference samples in the Taber abrasion test ... 44**

Bibliography ... 45

© ISO 2016 – All rights reserved
Documents
Document Sharing Hub
Full document details: BS ISO 15082:2016

Foreword

ISO (the International Organization for Standardization) is a worldwide federation of national standards bodies (ISO member bodies). The work of preparing International Standards is normally carried out through ISO technical committees. Each member body interested in a subject for which a technical committee has been established has the right to be represented on that committee. International organizations, governmental and non-governmental, in liaison with ISO, also take part in the work. ISO collaborates closely with the International Electrotechnical Commission (IEC) on all matters of electrotechnical standardization.

The procedures used to develop this document and those intended for its further maintenance are described in the ISO/IEC Directives, Part 1. In particular the different approval criteria needed for the different types of ISO documents should be noted. This document was drafted in accordance with the editorial rules of the ISO/IEC Directives, Part 2 (see www.iso.org/directives).

Attention is drawn to the possibility that some of the elements of this document may be the subject of patent rights. ISO shall not be held responsible for identifying any or all such patent rights. Details of any patent rights identified during the development of the document will be in the Introduction and/or on the ISO list of patent declarations received (see www.iso.org/patents).

Any trade name used in this document is information given for the convenience of users and does not constitute an endorsement.

For an explanation on the meaning of ISO specific terms and expressions related to conformity assessment, as well as information about ISO's adherence to the World Trade Organization (WTO) principles in the Technical Barriers to Trade (TBT) see the following URL: www.iso.org/iso/foreword.html.

The committee responsible for this document is ISO/TC 22, *Road vehicles*, Subcommittee SC 35, *Lighting and visibility*.

This second edition cancels and replaces the first edition (ISO 15082:1999), which has been technically revised.

© ISO 2016 – All rights reserved

Documents
Document Sharing Hub
Full document details: BS ISO 15082:2016

Documents
Document Sharing Hub

INTERNATIONAL STANDARD ISO 15082:2016(E)

Road vehicles — Tests for rigid plastic safety glazing materials

1 Scope

This document specifies commonly used test methods relating to the safety requirements for rigid plastic safety glazing materials in a road vehicle, regardless of the type of plastic of which they are composed.

NOTE 1 Plastic safety glazing materials are classified as rigid or flexible by use of the test described in Annex A.

NOTE 2 Further test methods might be defined in separate standards.

2 Normative references

The following documents are referred to in the text in such a way that some or all of their content constitutes requirements of this document. For dated references, only the edition cited applies. For undated references, the latest edition of the referenced document (including any amendments) applies.

ISO 48, *Rubber, vulcanized or thermoplastic — Determination of hardness (hardness between 10 IRHD and 100 IRHD)*

ISO 3538, *Road vehicles — Safety glazing materials — Test methods for optical properties*

ISO 4892-2:2013, *Plastics — Methods of exposure to laboratory light sources — Part 2: Xenon-arc lamps*

3 Terms and definitions

For the purposes of this document, the terms and definitions given in ISO 3536 apply.

ISO and IEC maintain terminological databases for use in standardization at the following addresses:

— IEC Electropedia: available at http://www.electropedia.org/

— ISO Online browsing platform: available at http://www.iso.org/obp

4 Test conditions

Unless otherwise specified, the tests shall be carried out under the following conditions:

— ambient temperature: 20 °C ± 5 °C;

— atmospheric pressure: 86 kPa to 106 kPa (860 mbar to 1 060 mbar);

— relative humidity: (60 ± 20) %.

5 Conditioning of test specimens

Unless otherwise specified, all test specimens to be tested shall be conditioned prior to testing under the following conditions and for the following periods of time:

— ambient temperature: 23 °C ± 2 °C for at least 48 h;

© ISO 2016 – All rights reserved

Documents
Document Sharing Hub
Full document details: BS ISO 15082:2016

— ambient relative humidity: (50 ± 5) % for at least 48 h;

— low temperature: –18 °C ± 2 °C for at least 24 h.

6 Application of tests

For certain types of safety glazing material, it is not necessary to carry out all the tests specified in this document.

7 Optical properties test

Test plastic safety glazing materials in accordance with ISO 3538.

8 Head-form/fragmentation test

8.1 Principle

Determine the fragmentation characteristics of plastic safety glazing materials at ambient temperature.

8.2 Apparatus

8.2.1 Head-form weight, shall be a spherical or semi-spherical head made of laminated hardwood covered with replaceable felt and with or without a cross-beam made of wood.

Between the spherical part and the cross-beam, there is a neck shaped intermediate piece and on the other side of the cross-beam, a mounting rod.

The dimensions shall be in accordance with Figure 1.

The total mass of the apparatus shall be 10 kg ± 0,2 kg.

© ISO 2016 – All rights reserved
Documents
Document Sharing Hub
Full document details: BS ISO 15082:2016

Dimensions in millimetres

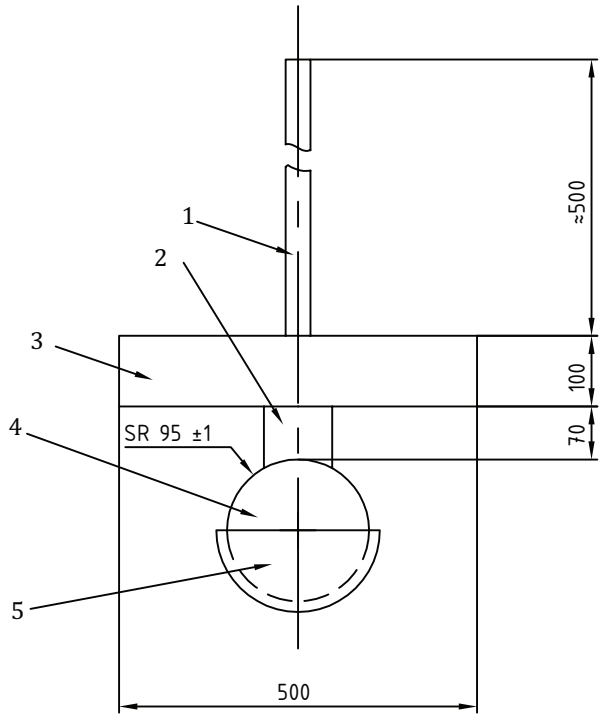

Key

1 mounting rod
2 intermediate piece
3 cross-beam (optional)
4 head
5 felt cover 5 mm thick

Figure 1 — Head-form weight

8.2.2 Drop.

The means for dropping the head-form weight freely from a height is to be specified, or the means for giving the weight a velocity equivalent to that obtained by the free fall.

When a device to project the head-form weight is used, the tolerance on velocity shall be ±1 % of the velocity equivalent to that obtained by the free fall.

8.2.3 Supporting fixture for testing flat test specimens, as show in Figure 2.

The fixture is composed of two steel frames, with 50 mm wide machined edges, fitting one over the other and faced with rubber gaskets about 3 mm ± 0,5 mm thick, and 15 mm ± 1 mm wide, of hardness 70 IRHD, measured in accordance with ISO 48. The upper frame is pressed against the lower frame by at least eight bolts; the minimum recommended torque for M20 bolts is 30 Nm. Alternatively, other pressing techniques may be used, e.g. hydraulic or pneumatic pressing (see 8.4).

8.3 Test specimens

Test specimens shall be flat rectangles with length 1 100 mm $^{+5}_{-2}$ mm and width 500 mm $^{+5}_{-2}$ mm.

© ISO 2016 – All rights reserved

Documents
Document Sharing Hub
Full document details: BS ISO 15082:2016

Dimensions in millimetres

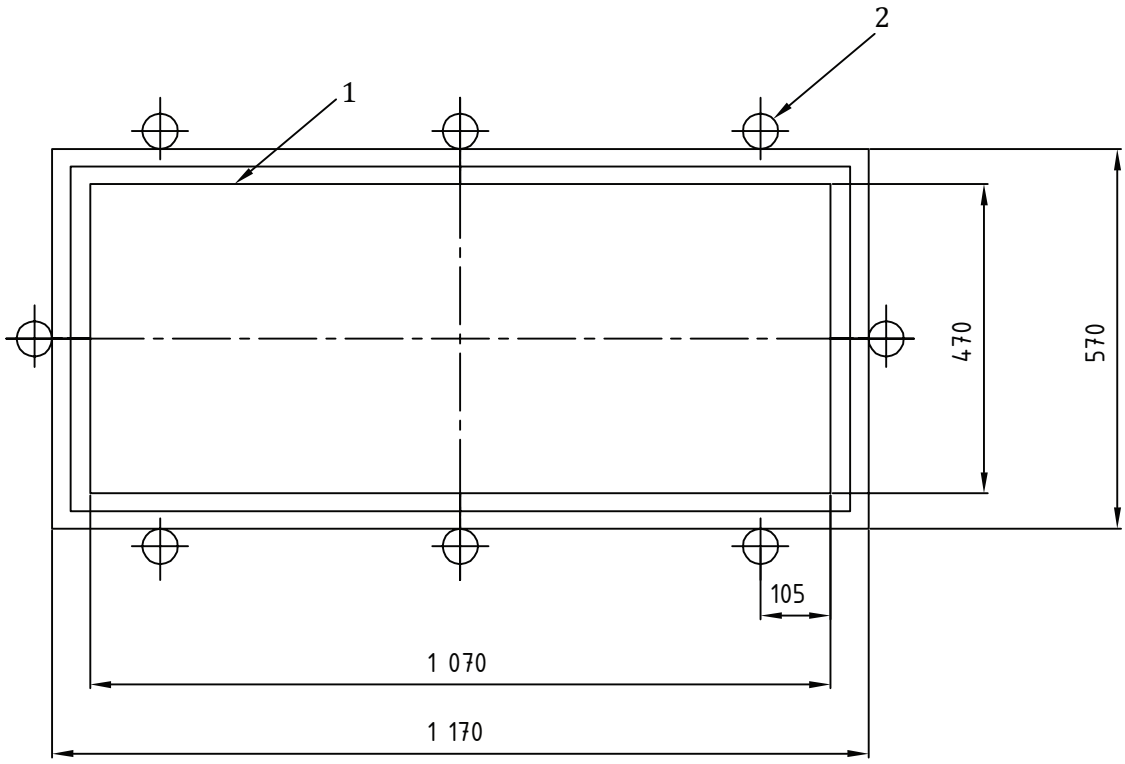

Key

1 rubber gasket

2 bolt

Figure 2 — Support for head-form tests

8.4 Procedure

Place a conditioned test specimen in the supporting fixture (Figure 2); the torque on the bolts, or the amount of hydraulic or pneumatic pressure, shall ensure that the movement of the test specimen during the test will not exceed 2 mm. The plane of the test specimen shall be substantially perpendicular to the incident direction of the head-form weight.

The head-form weight shall strike the test specimen, from a height to be specified, within 40 mm of its centre on that face which represents the inside face of the plastic safety glazing material when mounted on the vehicle, and shall be allowed to make only one impact.

The felt cover shall be replaced after 12 tests or when damaged.

8.5 Expression of results

Evaluate the fracture characteristics of the plastic safety glazing material by recording whether the test specimen did not break and the head-form was supported, or the test specimen broke and the head-form was supported, or the test specimen broke and the head-form was not supported. Record the drop height for each impact test.

In the event of fracture, evaluate the plastic safety glazing material by recording the smallest angle between two adjacent sides of resulting fragments and the area, longest dimension, and weight of the largest fragment. Record this data for the fragments remaining in the supporting fixture and for those that are dislodged from the supporting fixture.

© ISO 2016 – All rights reserved
Documents
Document Sharing Hub
Full document details: BS ISO 15082:2016

9 Head-form test with deceleration measurement

9.1 Principle

Assessment of the minimum strength and fragmentation characteristics of plastic safety glazing materials under impact from a blunt, bulky object at ambient temperature. The danger of skull-brain-injuries is assessed by simultaneous determination of the HIC (head injury criterion)-values.

Tests can be performed on flat specimens or on complete panes.

9.2 Test conditions

Unless otherwise specified, the test shall be carried out under the following conditions:

— ambient temperature: 20 °C ± 5 °C;

— atmospheric pressure: 86 kPa to 106 kPa (860 mbar to 1 060 mbar);

— relative humidity: (60 ± 20) %.

9.3 Conditioning of test pieces

Unless otherwise specified, the test pieces to be tested shall be conditioned prior to testing under the following conditions and for the following periods of time:

— ambient temperature: 23 °C ± 2 °C for at least 48 h;

— ambient relative humidity: (50 ± 5) % for at least 48 h.

9.4 Apparatus

To perform the head-form test with deceleration measurement, a test apparatus according to Figure 3 can be used. The head-form (see 9.4.1 and Figure 4) is fixed to the cross arm of the guide system and moved to the required drop height by means of a lifting device. To start the drop test the cross arm with the head-form is released. After passing the height-adjustable light barrier the head-form is released from the cross arm, the cross arm's fall is dampened and the head-form drops onto the test piece. Instead of the data transmission via cables, wireless data transmission (e.g. radio transmission) may be used. In this case,the guide system can be omitted because of no risk of obstruction of the free vertical drop by any cables.

© ISO 2016 – All rights reserved

Documents
Document Sharing Hub
Full document details: BS ISO 15082:2016

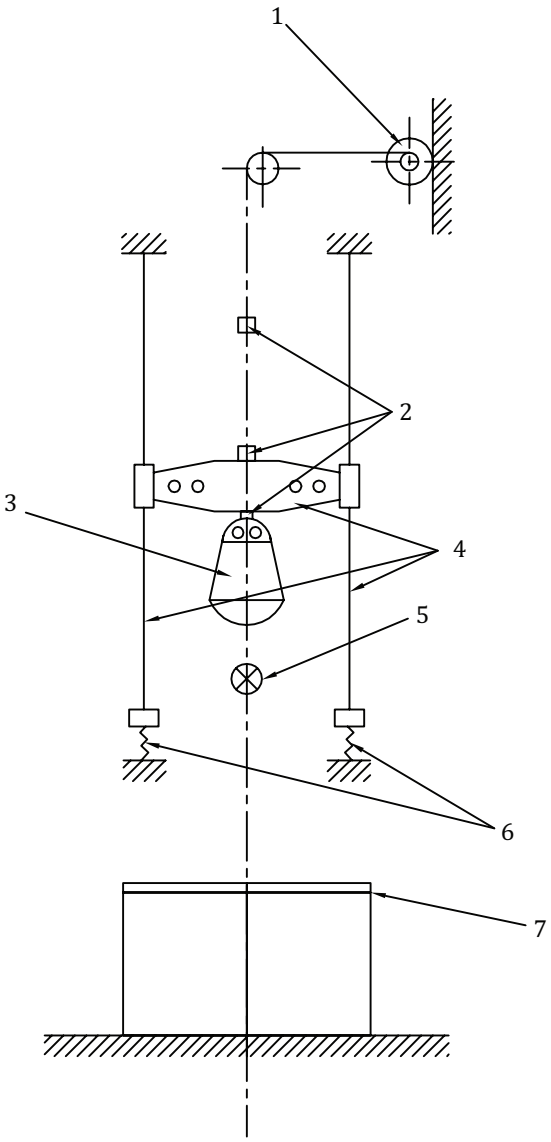

Key

1 lifting device
2 release device
3 drop body (head-form)
4 guide system
5 light barrier
6 dampers
7 test-piece support

Figure 3 — Principal sketch of a test apparatus for the head-form test with deceleration measurement

9.4.1 Head-form weight. Head-form [as shown in Figure 4 for data transmission via co-axial (BNC) cables] with total mass of 10,0 kg + 0,2/-0,0 kg, which allows the simultaneous determination of HIC-values.

The components of the head-form according to Figure 4 are listed in Table 1. In the middle of the base plate (24), the tri-axial mounting block (26) is mounted in the centre of gravity to hold the acceleration gauges (27). The acceleration gauges shall be arranged vertically to each other.

© ISO 2016 – All rights reserved
Documents
Document Sharing Hub
Full document details: BS ISO 15082:2016

The basin (18) and cover (19) situated under the base plate (24) share, to a great extent, the elastic properties of the human skull. The elastic properties of the head-form on impact are determined by the hardness and the thickness of the intermediate ring (13) and the basin.

If wireless data transmission is used instead of transmission via co-axial cables, it shall be ensured that those electronic components additionally installed in the head-form do not influence mass, gravity centre point and spring force of the head-form. Those electronic components shall be installed on the base plate (24) only. A mass correction, if necessary, is also restricted to the base plate at that surface which faces the hollow space within the head-form. If additional miniature components for controlling of the electronic modules are required (e.g. micro switches, loading sockets for voltage supply), these may replace the co-axial cables. In this case, the original holes in the cover plate (29) and the protective cap (30) shall be used for the installation and wiring.

© ISO 2016 – All rights reserved

Documents
Document Sharing Hub
Full document details: BS ISO 15082:2016

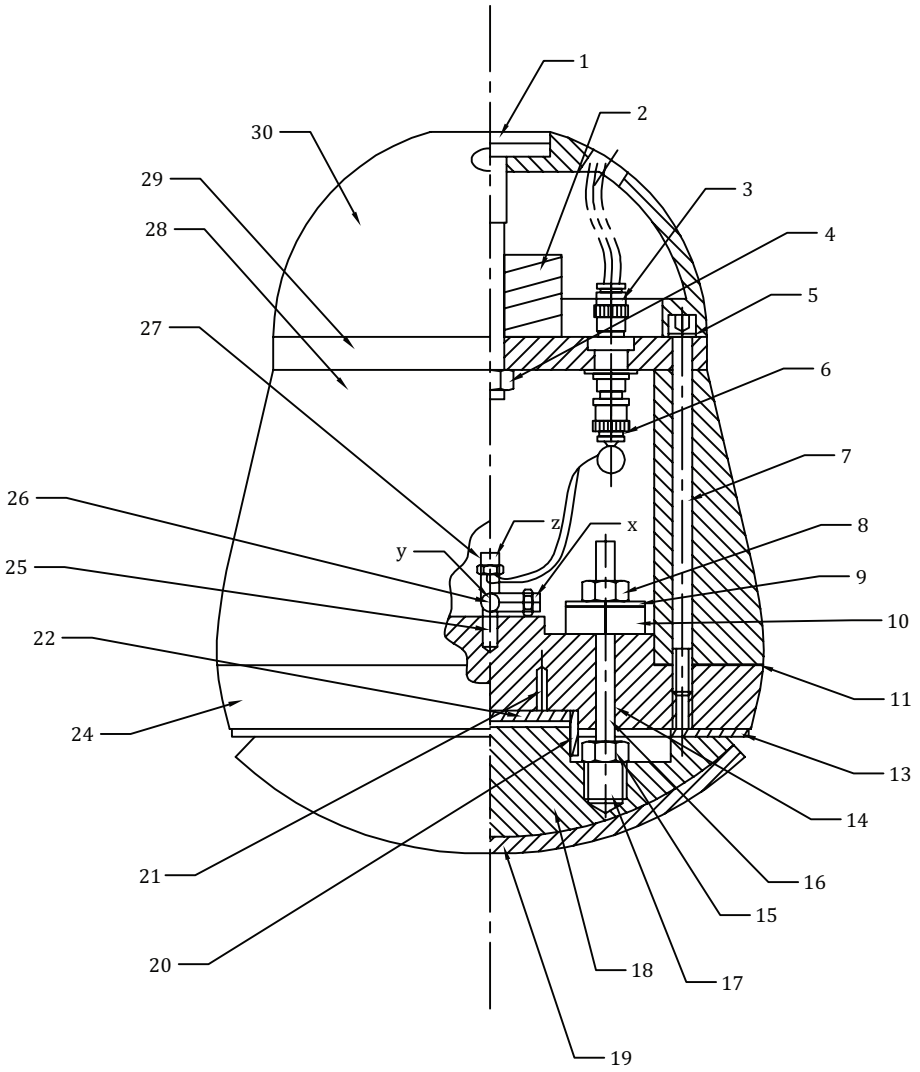

Key

1 magnetic holding device
2 vibration damper
3 HF connector BNC
4 hexagonal nut
5 disc
6 transition piece
7 cylinder screw
8 hexagonal nut
9 disc
10 rubber ring
11 damping ring
13 intermediate ring
14 guide tube
15 hexagonal nut
16 threaded bolt
17 screwed insert
18 basin
19 cover
20 guide bush
21 counter sunk crew
22 damping disc
24 base plate
25 set screw with hexagon socket
26 tri-axial mounting block
27 acceleration gauge
28 wood component
29 cover plate
30 protective cap

Figure 4 — 10 kg head-form

© ISO 2016 – All rights reserved
Documents
Document Sharing Hub
Full document details: BS ISO 15082:2016

9.4.2 Measuring device, for recording and evaluation of the measured deceleration curves $ax_{(t)}$, $ay_{(t)}$ and $az_{(t)}$, transmitted from the head-form acceleration gauges via cables or wireless: acceleration gauges, measuring and recording instruments according to ISO 6487, channel-amplitude class CAC 5000 m/s^2 and channel-frequency class CFC 1 000Hz.

Table 1 — List of components for the 10 kg head-form shown in Figure 4

Position no.	Number of pieces	Standard notation	*Material*	*Remarks*
1	1	Magnetic holding device	Steel: EN 10025–2-E295GC	—
2	1	Vibration damper	Rubber/steel	Diameter: 50 mm Thickness: 30 mm Thread: M10
3[a]	4	HF connector BNC	—	Coupler-coupler (EN 122120)
4	1	Hexagonal nut ISO 10511-M10–05	—	—
5	6	Disc ISO 7090-6-200HV	—	—
6[a]	3	Transition piece Pos.No. 3 – Pos.No. 27	—	—
7	6	Cylinder screw ISO 4762-M6x140–8.8	—	Torque about 12 Nm
8	3	Hexagonal nut ISO 10511-M8–05	—	Torque about 4 Nm (see 9.5)
9	3	Disc	Steel EN 10025–2-E295GC	Hole diameter: 8 mm Outer diameter: 35 mm Thickness: 1,5 mm
10	3	Rubber ring	Rubber, hardness 60 IRHD (ISO 48)	Hole diameter: 8 mm Outer diameter: 30 mm Thickness: 10 mm
11	1	Damping ring	Gasket paper	Hole diameter: 120 mm Outer diameter: 199 mm Thickness: 0,5 mm
12	—	—	—	—
13	1	Intermediate ring	Butadiene-rubber, hardness about 60 IRHD (ISO 48)	Hole diameter: 129 mm Outer diameter: 192 mm Thickness: about 6 mm (see 9.5)
14	3	Guide tube	Polytetrafluoroethylene (PTFE)	Inner diameter: 8 mm Outer diameter: 10 mm Length: 40 mm
15	3	Hexagonal nut ISO 10511-M8–05	—	—
16	3	Threaded bolt DIN 976–1–M8x90–B–8.8	—	—

[a] These components are unnecessary in case of wireless data transmission. In this case, other components for data transmission are installed in the head-form (e.g. radio-transmitter) (see 9.4.1).

© ISO 2016 – All rights reserved

Documents
Document Sharing Hub
Full document details: BS ISO 15082:2016