BS ISO 15394:2017

BSI Standards Publication

Packaging — Bar code and two-dimensional symbols for shipping, transport and receiving labels

Documents
Document Sharing Hub

Full document details: BS ISO 15394:2017

National foreword

This British Standard is the UK implementation of ISO 15394:2017. It supersedes BS ISO 15394:2009, which is withdrawn.

The UK participation in its preparation was entrusted to Technical Committee PKW/0, Packaging.

A list of organizations represented on this committee can be obtained on request to its secretary.

This publication does not purport to include all the necessary provisions of a contract. Users are responsible for its correct application.

© The British Standards Institution 2017
Published by BSI Standards Limited 2017

ISBN 978 0 580 85463 7

ICS 55.020; 01.080.01; 35.040.50

Compliance with a British Standard cannot confer immunity from legal obligations.

This British Standard was published under the authority of the Standards Policy and Strategy Committee on 31 December 2017.

Amendments/corrigenda issued since publication

Date	Text affected

Documents
Document Sharing Hub

Full document details: BS ISO 15394:2017

INTERNATIONAL STANDARD

ISO 15394

Third edition
2017-11

Packaging — Bar code and two-dimensional symbols for shipping, transport and receiving labels

Emballage — Codes à barres et symboles bidimensionnels pour l'expédition, le transport et les étiquettes de réception

Reference number
ISO 15394:2017(E)

Documents
Document Sharing Hub

© ISO 2017

Full document details: BS ISO 15394:2017

COPYRIGHT PROTECTED DOCUMENT

© ISO 2017, Published in Switzerland

All rights reserved. Unless otherwise specified, no part of this publication may be reproduced or utilized otherwise in any form or by any means, electronic or mechanical, including photocopying, or posting on the internet or an intranet, without prior written permission. Permission can be requested from either ISO at the address below or ISO's member body in the country of the requester.

ISO copyright office
Ch. de Blandonnet 8 • CP 401
CH-1214 Vernier, Geneva, Switzerland
Tel. +41 22 749 01 11
Fax +41 22 749 09 47
copyright@iso.org
www.iso.org

© ISO 2017 – All rights reserved

Documents
Document Sharing Hub

Full document details: BS ISO 15394:2017

Contents

Page

Foreword ... **v**
Introduction ... **vi**
1 Scope ... **1**
2 Normative references ... **1**
3 Terms and definitions ... **2**
4 Concepts ... **2**
4.1 Principles ... 2
4.2 Transport package, unit load and transport unit ... 3
4.2.1 Transport package ... 3
4.2.2 Unit load ... 3
4.2.3 Transport unit ... 3
4.3 Unique transport unit identifier ... 3
4.4 Label formats ... 3
4.4.1 Base shipping/transport/receiving label ... 3
4.4.2 Extended shipping/transport/receiving label ... 3
5 Data content ... **4**
5.1 Data representation ... 4
5.1.1 Data in linear bar code symbols ... 4
5.1.2 Data in two-dimensional (2D) symbols ... 4
5.1.3 Data in human-readable form ... 4
5.2 Data elements ... 4
5.2.1 Unique transport unit identifier ... 4
5.2.2 Ship to ... 5
5.2.3 Ship from ... 5
5.2.4 Key to carrier's database ... 5
5.2.5 Key to customer's database ... 5
5.2.6 Other data elements ... 6
5.3 Concatenating data fields in linear bar code symbols ... 6
5.3.1 Using GS1 Application Identifiers (AI) ... 6
5.3.2 Using ANSI MH10.8.2 Data Identifiers (DI) ... 6
5.4 Structured data files ... 6
5.4.1 General ... 6
5.4.2 Shipping and receiving data ... 6
5.4.3 Supporting documentation application ... 6
5.4.4 Carrier sorting and tracking applications ... 7
5.5 Data area identification ... 7
6 Data carriers ... **7**
6.1 Linear bar code symbols ... 7
6.2 Two-dimensional symbols ... 7
6.3 Human-readable information ... 8
6.3.1 Human-readable interpretation ... 8
6.3.2 Human translation ... 8
6.3.3 Data area titles ... 8
6.3.4 Free text and data ... 8
6.3.5 Choice of language ... 8
7 Label design ... **8**
7.1 General considerations ... 8
7.2 Layout ... 9
7.2.1 Base label layout ... 9
7.2.2 Extended label layout ... 9
7.2.3 Other data ... 10
7.3 Label dimensions ... 10

© ISO 2017 – All rights reserved

AVA Documents
Document Sharing Hub
Full document details: BS ISO 15394:2017

7.3.1 General considerations ... 10
7.3.2 Label height ... 10
7.3.3 Label width ... 10
7.3.4 Data limits ... 10
7.4 Text size ... 11
7.4.1 General considerations ... 11
7.4.2 Specific text dimensions ... 12
7.5 Material ... 12

8 Label placement ... 13
8.1 General considerations ... 13
8.2 Unit loads (pallets) ... 13
8.3 Transport packages ... 13
8.4 Other transport units ... 14

Annex A (normative) **Guidelines for using linear bar code symbols ... 15**

Annex B (normative) **Guidelines for using 2D symbols ... 18**

Annex C (informative) **Designing compliant labels using a building block approach ... 37**

Annex D (informative) **Issues to consider in the drafting of application guidelines or standards conforming to this document ... 41**

Annex E (informative) **Label examples ... 44**

Annex F (informative) **Recommended label locations on various containers ... 61**

Annex G (informative) **The impact of systems confronted with multiple symbologies and formats ... 64**

Bibliography ... 68

© ISO 2017 – All rights reserved
Documents
Document Sharing Hub
Full document details: BS ISO 15394:2017

Foreword

ISO (the International Organization for Standardization) is a worldwide federation of national standards bodies (ISO member bodies). The work of preparing International Standards is normally carried out through ISO technical committees. Each member body interested in a subject for which a technical committee has been established has the right to be represented on that committee. International organizations, governmental and non-governmental, in liaison with ISO, also take part in the work. ISO collaborates closely with the International Electrotechnical Commission (IEC) on all matters of electrotechnical standardization.

The procedures used to develop this document and those intended for its further maintenance are described in the ISO/IEC Directives, Part 1. In particular, the different approval criteria needed for the different types of ISO documents should be noted. This document was drafted in accordance with the editorial rules of the ISO/IEC Directives, Part 2 (see www.iso.org/directives).

Attention is drawn to the possibility that some of the elements of this document may be the subject of patent rights. ISO shall not be held responsible for identifying any or all such patent rights. Details of any patent rights identified during the development of the document will be in the Introduction and/or on the ISO list of patent declarations received (see www.iso.org/patents).

Any trade name used in this document is information given for the convenience of users and does not constitute an endorsement.

For an explanation on the voluntary nature of standards, the meaning of ISO specific terms and expressions related to conformity assessment, as well as information about ISO's adherence to the World Trade Organization (WTO) principles in the Technical Barriers to Trade (TBT), see the following URL: www.iso.org/iso/foreword.html.

This document was prepared by Technical Committee ISO/TC 122, *Packaging*.

This third edition cancels and replaces the second edition (ISO 15394:2009), which has been technically revised.

The main changes compared to the previous edition are as follows:

— 5.4 has been restructured;

— 5.5 has been added;

— additional information on label design has been added in 7.1;

— a new Figure E.7 has been added and succeeding figures have been renumbered accordingly;

— E.3 has been added;

— Figures E.11, E.12, and E.13 have been added;

— Tables E.1 and E.2 have been added.

© ISO 2017 – All rights reserved

Documents
Document Sharing Hub
Full document details: BS ISO 15394:2017

Introduction

The use of electronic data interchange (EDI) in association with the physical transport and handling of packages and when traceability is appropriate, such as that described in ISO 9000, requires a clear and unique identifier linking the electronic data and the transport unit.

Bar code-marked transport labels are in widespread use in global industries. Several different standards exist, each designed to meet the requirements of the specific industry sector. For effective and economic use within and between industry sectors, one common multi-industry standard is a necessity.

A bar code-marked transport label is designed to facilitate the automation of shipping and handling of administrative operations. The bar code information on the transport label may be used as a key to access the appropriate database that contains detailed information about the transport unit, including information transmitted using EDI. In addition, a transport label may contain other information as agreed between the trading partners.

Two-dimensional symbols may be included to assist in moving large amounts of shipping label or EDI data from sender to recipient and to assist the transportation carrier automated sortation and tracking systems.

This document incorporates the technology, data structure and conformance standards of ISO/IEC JTC 1/SC 31 with the user requirements for shipping labels into a single application standard.

While this document provides an international shipping label standard, ISO 22742 provides guidance for product packaging. This document and ISO 22742 are complementary.

On the other hand, ISO 17365 covers the use of RF tags on shipping/transport units and was prepared by ISO/TC 122.

© ISO 2017 – All rights reserved
Documents
Document Sharing Hub
Full document details: BS ISO 15394:2017

Packaging — Bar code and two-dimensional symbols for shipping, transport and receiving labels

1 Scope

This document:

— specifies the minimum requirements for the design of labels containing linear bar code and two-dimensional symbols on transport units to convey data between trading partners;

— provides for traceability of transported units using a unique transport unit identifier (licence plate);

— provides guidance on the formatting on the label of data presented in linear bar code, two-dimensional symbol or human-readable form;

— provides specific recommendations regarding the choice of bar code symbologies, and specifies quality requirements;

— provides recommendations as to label placement, size and the inclusion of free text and any appropriate graphics;

— provides guidance on the selection of the label material.

This document is not applicable to the direct printing on to kraft coloured corrugated surfaces.

NOTE Guidance on the direct printing of bar code symbols on to kraft coloured corrugated surfaces are provided in references such as *The Fibre Box Handbook*[10].

2 Normative references

The following documents are referred to in the text in such a way that some or all of their content constitutes requirements of this document. For dated references, only the edition cited applies. For undated references, the latest edition of the referenced document (including any amendments) applies.

ISO/IEC 15415, *Information technology — Automatic identification and data capture techniques — Bar code symbol print quality test specification — Two-dimensional symbols*

ISO/IEC 15416, *Automatic identification and data capture techniques — Bar code print quality test specification — Linear symbols*

ISO/IEC 15417, *Information technology — Automatic identification and data capture techniques — Code 128 bar code symbology specification*

ISO/IEC 15434, *Information technology — Automatic identification and data capture techniques — Syntax for high-capacity ADC media*

ISO/IEC 15438:2015, *Information technology — Automatic identification and data capture techniques — PDF417 bar code symbology specification*

ISO/IEC 15459-1, *Information technology — Automatic identification and data capture techniques — Unique identification— Part 1: Individual transport units*

ISO/IEC 15459-2, *Information technology — Automatic identification and data capture techniques — Unique identification— Part 2: Registration procedures*

ISO/IEC 16023:2000, *Information technology — International symbology specification — MaxiCode*

AVA Documents
Document Sharing Hub

© ISO 2017 – All rights reserved

Full document details: BS ISO 15394:2017

ISO/IEC 16388, *Information technology — Automatic identification and data capture techniques — Code 39 bar code symbology specification*

ISO/IEC 18004, *Information technology — Automatic identification and data capture techniques — QR Code bar code symbology specification*

ISO/IEC 19762, *Information technology — Automatic identification and data capture (AIDC) techniques — Harmonized vocabulary*

ISO 17365, *Supply chain applications of RFID — Transport units*

ISO 21067, *Packaging — Vocabulary*

ANSI MH10.8.2, *Data Identifier and Application Identifier Standard*

GS1 General Specifications.

3 Terms and definitions

For the purposes of this document, the terms and definitions given in ISO/IEC 19762 and ISO 21067 apply.

ISO and IEC maintain terminological databases for use in standardization at the following addresses:

— ISO Online browsing platform: available at https://www.iso.org/obp

— IEC Electropedia: available at http://www.electropedia.org/

4 Concepts

4.1 Principles

The purpose of a bar code label is to facilitate the automatic exchange of data among all members within a channel of distribution, i.e., supplier, carrier, purchaser and other intermediaries. The amount of data, in linear bar code, two-dimensional symbols and in human-readable form, is dependent on the requirements of the trading partners. Where a bar code label is used in conjunction with electronic databases and/or electronic data interchange (EDI) systems, the amount of data may be significantly reduced and may consist of only one piece of data, the unique identifier for the transport unit. If radio frequency identification (RFID)-enabled labels or tags are used in conjunction with labels in conformance with this document, ISO 17365 shall be used for RFID usage with transport units. Human and optically readable data for the representation of RFID applications should be in accordance with ISO/IEC/TR 24729-1.

Trading partners have different information requirements. Some information may be common to two or more trading partners, while other information may be specific to a single trading partner. Information for various trading partners becomes available at different times, for instance:

— product-specific information at the point of manufacture or packaging;

— order processing information at the time of processing the order;

— transport information at the time of shipment.

Trading partners may find it necessary to include significant data elements dealing with the above that may be presented both in linear bar code and two-dimensional symbols (see Annexes A and B) and human-readable form.

This document shall be used in conjunction with application guidelines defining the parameters chosen by the trading partners concerned. Annex D gives guidance in the definition of these parameters.

© ISO 2017 – All rights reserved
Documents
Document Sharing Hub
Full document details: BS ISO 15394:2017

4.2 Transport package, unit load and transport unit

4.2.1 Transport package

For the purposes of this document, a transport package is considered to be a package intended for the transportation and handling of one or more articles, smaller packages or bulk material.

4.2.2 Unit load

For the purposes of this document, a unit load is considered to be one or more transport packages or other items held together by means such as pallet, slip sheet, strapping, interlocking, glue, shrink wrap or net wrap, making them suitable for transport, stacking and storage as a unit.

4.2.3 Transport unit

Both unit loads and transport packages are referred to as transport units in this document.

4.3 Unique transport unit identifier

One unique transport unit identifier shall be assigned and applied to each transport unit prior to shipment. The unique transport unit identifier shall be associated with the highest level of packaging intended to be conveyed as a single physical entity by the shipper (e.g., a transport package within an unbreakable unit load does not require a unique transport unit identifier). This is a common requirement for all label formats specified by this document. The identifier or "licence plate" is the key, providing access to information stored in computer files and which may be transmitted electronically. The identifier may be used by all of the trading partners to retrieve information about the transport unit itself or about the status of the physical movement of the transport unit along the supply chain. It enables systems to track and trace individual transport units.

4.4 Label formats

4.4.1 Base shipping/transport/receiving label

The base label defined by this document includes the minimum set of data that fulfils the requirements of all trading partners in a supply chain when data is exchanged electronically between the parties involved.

A unique transport unit identifier shall be, and a "Ship to" name and address should be, included on the base label.

In addition to the unique transport unit identifier ("licence plate") and the "Ship to" name and address (for shipment delivery), the following information should be included on the base label:

— "Ship from" name and address (to be able to return the shipment in the event that delivery is not possible);

— key to carrier's database (if the licence plate is not this data element);

— key to customer's database (if the licence plate is not this data element).

4.4.2 Extended shipping/transport/receiving label

The extended label is used when the data available from the base label does not satisfy the requirements of all trading partners. In practice, fully automated communication channels which make it possible to rely exclusively on electronic files for retrieving information on the movements of the transport units are not always available. For this reason, there is a need to indicate relevant information on the transport units themselves, in addition to their identification.

© ISO 2017 – All rights reserved

Documents
Document Sharing Hub
Full document details: BS ISO 15394:2017

In order to facilitate the processing and interpretation by trading partners, information provided in the extended label is organized in three segments:

— carrier segment: in addition to the key to the carrier's database, this segment may contain additional data, such as shipment identification and delivery instructions;

— customer segment: in addition to the key to the customer's database, this segment may contain additional data such as the customer part number;

— supplier segment: additional data may be generated by the supplier, such as product identification, batch number, dimensions.

5 Data content

5.1 Data representation

5.1.1 Data in linear bar code symbols

Such data shall be represented in one of the three permissible combinations of data and bar code symbology (also see Annex A):

a) GS1 Application Identifiers (AIs) in accordance with ISO/IEC 15418 shall only be used in conjunction with GS1-128 (being a subset of Code 128 compliant with ISO/IEC 15417);

b) ASC MH10 Data Identifiers (DIs) in accordance with ISO/IEC 15418 shall be used in conjunction with Code 39 symbols compliant with ISO/IEC 16388;

c) ASC MH10 Data Identifiers (DIs) in accordance with ISO/IEC 15418 shall be used in conjunction with Code 128 symbols compliant with ISO/IEC 15417.

Refer to Annex D for information on the use of the options and the issues for users encountering them.

5.1.2 Data in two-dimensional (2D) symbols

Information may also be provided in two-dimensional symbols as mutually agreed upon between trading partners (see Annex B). Data syntax in two-dimensional symbols shall be in accordance with ISO/IEC 15434.

5.1.3 Data in human-readable form

The human-readable interpretation of information presented in linear bar code form should be provided. Some information may be presented in human-readable form only (see 6.3).

5.2 Data elements

5.2.1 Unique transport unit identifier

The unique transport unit identifier assigned by the labeller shall be encoded in a linear bar code symbol, preceded by the appropriate GS1 Application Identifier or ANSI MH10.8.2 Data Identifier.

The structure of the unique transport unit identifier is defined in ISO/IEC 15459-1. The unique transport unit identifier

a) starts with the issuing agency code (IAC), assigned to the issuing agency by the registration authority,

b) conforms to a format specified by the issuing agency,

© ISO 2017 – All rights reserved
Documents
Document Sharing Hub
Full document details: BS ISO 15394:2017

c) is unique in the sense that no issuer re-issues a number until a sufficient period of time has passed that the first number has ceased to be of significance to any user of this document,

d) contains only numeric and upper case alphabetic characters (not including lower case characters or punctuation marks),

e) does not contain more than 20 characters, including the ANSI MH10.8.2 Data Identifier or GS1 Application Identifier, and

f) does not contain more characters than specified in Table 1.

The unique transport unit identifier shall be assigned to each individual transport unit.

The unique transport unit identifier shall be either

— the serial shipping container code (SSCC) that uses AI "00", represented in GS1-128, or

— the unique transport unit identifier using the ANSI MH10.8.2 Category 10 Data Identifiers for Licence Plates (J-999J) represented in either Code 39 or Code 128 symbologies.

5.2.2 Ship to

The "Ship to" data element refers to the address of the party to which transport units are to be delivered. When used, it shall be represented in a maximum of five lines of human-readable characters comprised of no more than 35 alphanumeric (an..35) characters each. It may also be represented by a number identifying the party in human-readable or in bar code format.

5.2.3 Ship from

The "Ship from" data element refers to the address of the party to which transport units are to be returned, in case the shipment was unable to be delivered. When used, it shall be represented in a maximum of five lines of human-readable characters comprised of no more than 35 alphanumeric (an1...35) characters each. It may also be represented by a number identifying the party in human-readable or in bar code format. The "Ship from" information shall be located in the left, upper-most area or building block of the label (see Annex C for building block information).

5.2.4 Key to carrier's database

The key to the carrier's database should be mutually agreed upon with the carrier. If the unique transport unit identifier described in 5.2.1 does not provide the key to the carrier's database, one or more of the following keys may be used:

— the carrier tracking number that includes class of service;

— the carrier code to identify the shipment;

— the carrier code to identify the transport unit.

This data element may be included within a two-dimensional symbol, a linear bar code symbol or both.

5.2.5 Key to customer's database

The key to the customer's database should be mutually agreed upon with the customer. If the unique transport unit identifier described in 5.2.1 does not provide the key to the customer's database, one or more of the following keys may be used:

— customer's purchase order number;

— part number;

— KANBAN/pull signal number;

© ISO 2017 – All rights reserved

Documents
Document Sharing Hub
Full document details: BS ISO 15394:2017

— shipment ID.

This data element may be included within a two-dimensional symbol, a linear bar code symbol or both.

5.2.6 Other data elements

As much additional data as required may be included in the extended label to fulfil the needs of the supplier, carrier and customer.

5.3 Concatenating data fields in linear bar code symbols

5.3.1 Using GS1 Application Identifiers (AI)

When several Application Identifiers (AIs) and their data are concatenated into one GS1-128 symbol, each variable length field shall be followed by the FNC1 (Function 1) character, unless it is the last field encoded in the symbol. The FNC1 character used for this purpose assumes a value of ^{G}S when transmitted by the decoder.

5.3.2 Using ANSI MH10.8.2 Data Identifiers (DI)

When several DIs and their data are concatenated into one Code 39 or Code 128 symbol, each field shall be followed by a plus symbol, “+”, unless it is the last field encoded in the symbol.

Care should be exercised when concatenating data fields in linear symbols since some ANSI MH10.8.2 Data Identifiers prescribe the use of the “+” as an internal data structure syntax. Examples include the ANSI MH10.8.2 Data Identifiers “14K”, “19S”, and “3W”.

5.4 Structured data files

5.4.1 General

Structured data files, such as documentation supporting the handling of the transport units or complete EDI messages, e.g., delivery note, quality certificate and insurance certificate, may be included. High-capacity two-dimensional symbols shall be used to represent this data. Structured data files shall comply with the syntax described in ISO/IEC 15434, or when appropriate, the GS1 General Specifications.

5.4.2 Shipping and receiving data

It is possible to combine all the data from the linear bar codes on the multi-industry transport label into one single two-dimensional symbol to facilitate more efficient data capture. This symbol may also incorporate additional data not represented in the linear bar codes on the transport label (e.g., data represented in text).

The structure and syntax of the encoded message shall conform to ISO/IEC 15434.

5.4.3 Supporting documentation application

The transport of goods often requires supporting documentation to be provided, such as a bill of lading, manifest, packing slip, customs data or information that might be transmitted in EDI or other message formats. Supporting documentation incorporated as an item-attendant two-dimensional symbol on the transport label facilitates more efficient processing of a transport unit because the relevant “documentation” can be scanned.

The structure and syntax of the encoded message shall conform to ISO/IEC 15434.

© ISO 2017 – All rights reserved
Documents
Document Sharing Hub
Full document details: BS ISO 15394:2017

5.4.4 Carrier sorting and tracking applications

Sortation data to be encoded include any data that are required to route transport units between multiple points, locate transport units and other supporting data which is relevant to sorting and/or tracking for internal and external processing.

The structure and syntax of the encoded message shall conform to ISO/IEC 15434.

5.5 Data area identification

In practice, fully automated communication channels that make it possible to rely exclusively on electronic files for retrieving information on the movements of the transport units are not always available. For this reason, in addition to their identification, there is a need to indicate relevant information on the transport labels themselves.

The various fields can be placed in relevant data areas.

These data areas, whether they contain bar code or human-readable information, shall be identified with the corresponding data area title. The data area title may include the relevant application identifier or data identifier.

EXAMPLES:

CUST:
CUST PART NO:
(400) CUST P O:
GLN:
(J) LICENCE PLATE:
SHIP FROM:
SHIP TO:
SSCC:
(12K) SCAC and PRO #:
(Q) QTY:

6 Data carriers

6.1 Linear bar code symbols

Guidelines for using linear bar code symbols are found in Annex A. The linear bar code symbologies shall be one of the following:

— “Code 39” in accordance with ISO/IEC 16388;

— “Code 128” in accordance with ISO/IEC 15417.

NOTE “GS1-128” is a subset of “Code 128”.

6.2 Two-dimensional symbols

If more data than can be accommodated with a linear bar code is required to be encoded on the label in optically readable symbol(s), 2D symbols may be used. This document specifies the use of MaxiCode, PDF417 and QR Code 2D symbologies. This document recommends the use of MaxiCode, PDF417 or QR Code for carrier sortation and tracking applications and PDF417 or QR Code for shipping and receiving applications and for supporting documentation applications. The specific two-dimensional symbol to be used shall be mutually agreed upon between trading partners.

For further information and guidance in the use of 2D symbols, see Annex B.

© ISO 2017 – All rights reserved

Documents
Document Sharing Hub
Full document details: BS ISO 15394:2017

6.3 Human-readable information

6.3.1 Human-readable interpretation

In order to provide a fall-back key entry and diagnostic, a human-readable interpretation of each linear bar code symbol shall be provided adjacent to the bar code. Such human-readable interpretation shall represent the encoded data. See Figure E.9.

6.3.2 Human translation

In addition to the human-readable interpretation, human translation of linear bar code information may be provided in a separate section of the label. See Figure E.9.

6.3.3 Data area titles

Data areas comprise information in bar code or human-readable form. Data areas shall be identified with the corresponding data area title in human-readable text, which may be prefixed, if relevant, by the appropriate AI or DI (see Figures E.1 and E.2). A data area title is not required when a data area contains

— a single linear bar code symbol concatenating multiple data elements, or

— multiple linear bar code symbols that are intended to be scanned in a single data capture operation, or

— two-dimensional symbols.

6.3.4 Free text and data

Human-readable information that is not a translation of the bar code information may be provided according to the requirements of the trading partners.

6.3.5 Choice of language

6.3.5.1 Applicability

Choice of language is applicable to human translation, data area titles and free text.

6.3.5.2 Domestic shipments

Human-readable information within a single country should be in the national language of that country.

6.3.5.3 Export shipments

Shipments for export should have human-readable information in the language(s) mutually agreed upon between trading partners.

6.3.5.4 Multiple languages

Regulations may require multiple languages on the shipping label.

7 Label design

7.1 General considerations

The linear bar code representing the unique transport unit identifier ("licence plate"), a mandatory element for this document, shall be printed in the lowest area of the label.

© ISO 2017 – All rights reserved
Documents
Document Sharing Hub
Full document details: BS ISO 15394:2017

Label segments are logical groupings of information based on the data needs of the trading partners within the distribution channel. Three segments are defined: carrier segment, customer segment and supplier segment. Label segments may or may not be printed at the same time on a single physical label. When the size and structure of the transport unit permits, segments shall be stacked vertically, from top to bottom, in the following order:

— carrier segment;

— customer segment;

— supplier segment.

The design of the label is the responsibility of the industry or trading partners concerned and should take account of the following when defining the label segments:

— the size and number of linear bar codes and two-dimensional symbols;

— the size and number of human-readable items of information;

— free text;

— graphics, e.g., safety, hazard, quality signs;

— logos, e.g., supplier logo.

Examples of labels are provided in Annex E. The labels shown in Annex E are for illustration only and do not represent all of the possible choices of label designs. Separate segments of the label may be applied at different stages to form the complete label.

7.2 Layout

7.2.1 Base label layout

In addition to the unique transport unit identifier, a typical base label may include the following data areas:

— “Ship from” address, human-readable;

— “Ship to” address, human-readable;

— “Ship to” postal code or location number, linear bar code;

— carrier shipment tracking number (if required), linear bar code;

— customer purchase order number (if required), linear bar code.

Only linear bar codes shall be used to represent data in a machine-readable form on a base label.

The “Ship to” address shall be located below or to the right of the “Ship from” address. “Ship from” characters shall be noticeably smaller than the “Ship to” characters and the fields shall be easily distinguishable. All international shipments shall conform to this requirement.

For shipments within a single country and where that country has a national standard recommending an alternative label layout, e.g., where “Ship from” address and “Ship to” address are reversed, such alternative label layout may be used with the agreement of the trading partners.

7.2.2 Extended label layout

The extended label comprises more information than the base label. In addition to the information contained in the base label, the extended label may include

— linear bar codes representing other discrete data elements,

© ISO 2017 – All rights reserved

Documents
Document Sharing Hub
Full document details: BS ISO 15394:2017

— linear bar codes representing concatenated data elements,

— two-dimensional symbols,

— human translation of linear bar code information,

— human-readable-only information, and

— graphics.

7.2.3 Other data

This document does not supersede or replace any applicable safety or regulatory marking or labelling requirements. This document is to be applied in addition to any other mandated labelling requirements. Free areas or certain graphics, such as safety, hazard, quality signs or logos could be required.

7.3 Label dimensions

7.3.1 General considerations

The size of the label shall be consistent with the data requirements of all trading partners in the supply chain with the only constraint being the size of the transport unit.

The label format described does not dictate a fixed size for the total label. The physical dimensions of the label shall be determined by the labeller. Considerations for label size selection may include the amount of data to be printed, the physical characteristics of the printing equipment used or the size of the transport unit. See Annex C for information on designing compliant labels using a building block approach.

7.3.2 Label height

The height of the label shall be determined by the labeller.

7.3.3 Label width

The width of the label shall be determined by the labeller. Label width is determined by the *x*-dimension of the printed bar code symbol and the maximum bar code message length. Table 2 shows the correlation between *x*-dimension and label width for selected *x*-dimensions, using the data limits set forth in Table 1.

Some existing industry standards have other data limits. If a trading partner needs a single Code 39 bar code data field that contains more characters than specified in Table 1, the labeller may choose to use a wider label stock or an *x*-dimension at the lower limits of this document.

7.3.4 Data limits

Limits on the number of characters which can be required of the labeller for a single bar code symbol are shown in Table 1.

© ISO 2017 – All rights reserved
Documents
Document Sharing Hub
Full document details: BS ISO 15394:2017

Table 1 — Maximum character limits for linear symbols

Symbology and format	Character limits
Code 128 (numeric)	50 digits (after a single-character DI)
Code 128 (alphanumeric)	27
GS1-128 (all numeric)	48
GS1-128 (alphanumeric)	26
Code 39	19

NOTE 1 For GS1-128, the character count includes all characters between the Function 1 (FNC1) character and the symbology check character.

NOTE 2 For Code 39, character count includes all characters between the start and stop characters.

Table 2 — Recommended label widths for symbol, maximum characters and *x*-dimension

Dimensions in millimetres

x-dimension	Code 39	Code 128 all numeric	Code 128 alphanumeric	GS1-128 SSCC	GS1-128 all numeric	GS1-128 alphanumeric
	19	50 (single DI)	27	20 exactly	48	26
0,25	105	105	105	Not recommended	105	105
0,33	148	148	148		148	148
0,38	148	148	148		148	148
0,43	over 148	148	over 148		over 148	over 148
0,50		Not recommended		105	over 148	over 148
0,66				148	over 148	over 148
0,76				148	over 148	over 148
0,81				over 148	over 148	over 148

NOTE 1 This table is intended to provide guidance to the printer/applier of a label on the size of label stock needed to accommodate the maximum character limits as stated in Table 1.

NOTE 2 This label width guidance is based on only two label sizes, 105 mm and 148 mm.

NOTE 3 Included in the minimum label width calculations in this table are the following:

— symbology start and stop characters, 2,54 mm print registration and quiet zones of 6,4 mm or 10 times the bar code symbol *x*-dimension, whichever is greater;

— for GS1-128 symbols, Function 1 character (FNC1) and symbology check character;

— for Code 39 symbols, a 3:1 wide to narrow ratio and one *x*-intercharacter gap;

— for Code 128 symbols, the symbology check character.

NOTE 4 GS1-128 SSCC bar code symbols have minimum *x*-dimensions greater than 0,432 mm. In order to fit on a label size of 102 mm, this symbol should be printed at the smallest *x*-dimension specified in the GS1 specifications.

7.4 Text size

7.4.1 General considerations

The height of the text characters is associated with the number of characters that can be required on a single line.

Nine sizes may be specified for text. The exact character heights corresponding to the nine text sizes shall be chosen by the labeller based on the capabilities of the printing process.

The characters shall be clearly legible.

Table 3 shows the maximum number of text characters per line that can be required of a labeller.

© ISO 2017 – All rights reserved

Documents
Document Sharing Hub
Full document details: BS ISO 15394:2017

Table 3 — Character heights and character limits

Approximate character height (mm)	**Character limits for full-width label**[a] (number of characters)
25,4	8
12,7	18
8,4	28
6,4	34
5,1	42
4,3	48
3,6	59
3,2	68
2,5	77

[a] Calculations for the text character count limits are based on the following assumptions: a 102 mm wide label segment, clear distinction between the character sizes used, and fixed-width characters.

7.4.2 Specific text dimensions

The specific heights of the text characters shall be as follows:

— the data area titles shall be no smaller than 2,5 mm;

— the "Ship from" address shall be no smaller than 2,5 mm and in any case shall be smaller than the "Ship to" address text;

— the "Ship to" address shall be no smaller than 4,3 mm and in any case shall be larger than the "Ship from" address text;

— the literal translation of the associated linear bar code symbol [also known as human-readable interpretation (HRI)] shall be no smaller than 2,5 mm;

— the primary human-readable information (also known as human translation) shall be no smaller than 5,1 mm;

— the secondary human-readable information (also known as text or descriptive information) shall be no smaller than 2,5 mm.

7.5 Material

Label material and the method of attaching the label to the transport unit shall be selected such as to ensure that the label

— remains attached to the transport unit for the intended life of the label,

— remains readable for the life of the label,

— survives the environments for the life of the label, for example contamination, heat, light, moisture, and

— meets disposability requirements.

© ISO 2017 – All rights reserved
Documents
Document Sharing Hub
Full document details: BS ISO 15394:2017

8 Label placement

8.1 General considerations

Labels should be affixed at a suitable location where there is a minimum risk of damage. Labels should be placed on the side of the transport unit with the human-readable information parallel to the natural bottom of the transport unit. The edge of the label(s) should be a minimum of 32 mm from any transport unit edge.

Transport units should carry at least one bar code label. Parcel carriers may require the placement of carrier information on the top of a transport unit, in addition to customer and supplier information which would continue to be placed in accordance with the preceding paragraph.

8.2 Unit loads (pallets)

The label shall be placed right of centre on a vertical face, allowing a minimum of 50 mm from either edge. The label should not be placed over a seam nor should sealing tape or bands be placed over the label in a manner that interferes with the scanning of the label. The bottom edge of the unique transport unit identifier symbol should be within the range of 400 mm to 800 mm from the bottom of the pallet. If the pallet is less than 500 mm in height, the label should be placed as high as possible on the pallet. See Figure 1.

Dimensions in millimetres

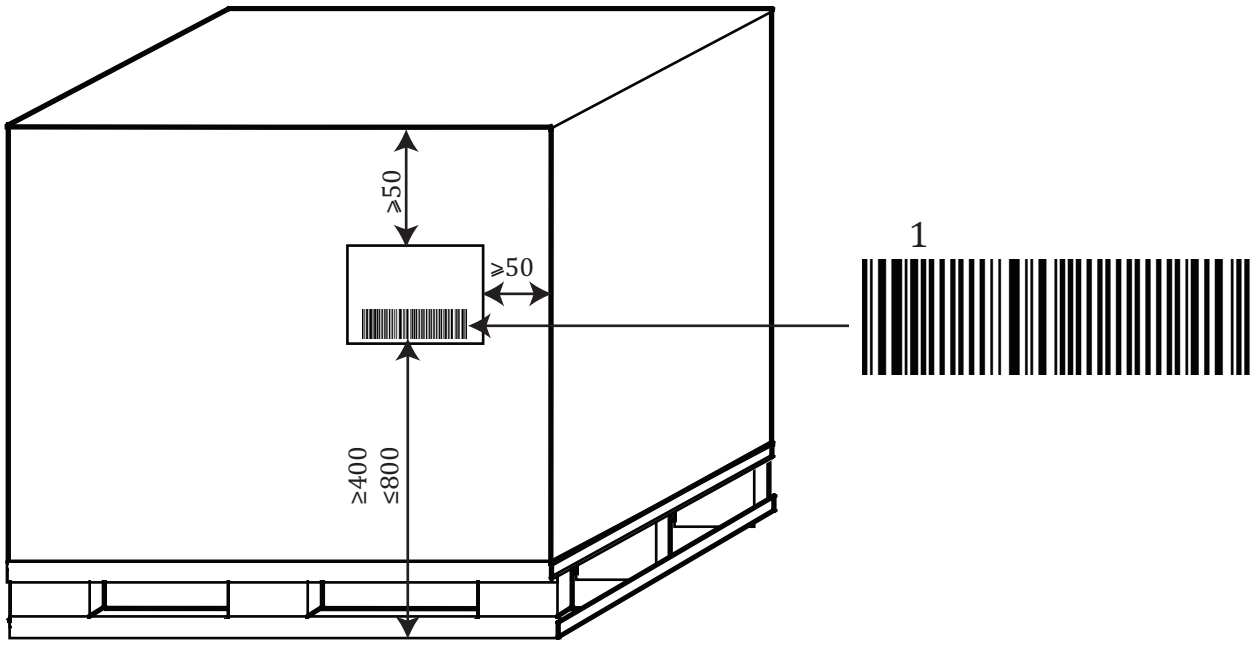

Key

1 unique transport unit identifier

Figure 1 — Pallet label location

8.3 Transport packages

For transport packages up to 1 m in height, the target placement for the unique transport unit identifier symbol is 32 mm from the natural bottom of the package. Transport packages greater than 1 m in height should follow the recommendations of 8.2.

© ISO 2017 – All rights reserved

Documents
Document Sharing Hub
Full document details: BS ISO 15394:2017

8.4 Other transport units

Annex F provides labelling examples of various transport units. Label placement requirements should be developed in conjunction with specific application guidelines.

© ISO 2017 – All rights reserved
Documents
Document Sharing Hub
Full document details: BS ISO 15394:2017

Annex A
(normative)

Guidelines for using linear bar code symbols

A.1 General considerations

Open systems, such as those identified in this document, encourage the free movement of products between any supplier and customer. Organizations scanning the bar code label for shipping and receiving may be presented with symbols which do not conform to their specific requirements but are useful elsewhere in the supply chain. This annex addresses issues that are associated with this situation which can affect any organization, as well as issues that need to be considered in a planned migration between options.

This annex describes the use of symbology identifiers as identified in ISO/IEC 15424. The symbology identifier is a prefix to the data transmitted by a decoder but is not encoded in the symbol.

The available options are:

a) Application Identifiers with GS1-128 symbology;

b) ANSI MH10.8.2 Data Identifiers with Code 39 symbology;

c) ANSI MH10.8.2 Data Identifiers with Code 128 symbology.

Although it may be intended that only one of these combinations be in a system, it is important for all users to be aware that any of the other combinations can appear in a scanning system. Given this fact, organizations may choose to support a single option or support other options as well. These are discussed below.

A.2 Systems where a single option is intended to be scanned

For users selecting to operate in a single-option environment, there are three procedures to consider.

— For single use of option a), users may be able to switch off all other symbologies in a decoder, including Code 128, as described in option c). If the decoder supports symbology identifiers, the host system shall validate the appropriate symbology identifier, specifically “]C1”, that signifies a GS1-128 symbol having a FNC1 character in the first position after the start code.

— For single use of option b), users switch off all other symbologies in any decoder. If the decoder supports symbology identifiers, the host computer system shall validate the appropriate symbology identifier, specifically “]A0”.

— For single use of option c), users will need to implement fully the symbology identifier capability. For decoders that do not support symbology identifiers, host computer systems will be unable to automatically distinguish between option a) and option c). By using the symbology identifier, the host computer can distinguish between the different options and filter out the unwanted options. The host computer shall validate the appropriate symbology identifier, specifically “]C0”.

A.3 Systems where multiple options are intended to be scanned

Users who choose to provide their systems with information scanned from labels using two or all of the options, shall fully implement symbology identifier capabilities. For decoders that do not support symbology identifiers, host computer systems will be unable to automatically distinguish between

© ISO 2017 – All rights reserved

AVA Documents Document Sharing Hub
Full document details: BS ISO 15394:2017

option a), option b), and option c). By using the symbology identifier, the host applications can be coded to distinguish between the different options and filter out the unwanted options. The combination of the symbology identifier and the ANSI MH10.8.2 Data Identifier or GS1 Application Identifier will provide the user with reliable input.

A.4 Symbology

The linear bar code symbologies shall be one of the following:

— Code 39 in accordance with ISO/IEC 16388;

— Code 128 in accordance with ISO/IEC 15417.

NOTE GS1-128 is a subset of Code 128.

A.5 Symbol height

The minimum bar height of a linear bar code symbol shall be 12,7 mm and should be at least 15 % of the length of the symbol including quiet zones.

A.6 Narrow element dimension

The minimum narrow element dimension (*x*-dimension) shall not be less than 0,25 mm. The *x*-dimension for Code 39 and Code 128 symbols should be in the range of 0,25 mm to 0,43 mm, as determined by the printing capability of the supplier/printer of the label. The *x*-dimension for GS1-128 symbols should be in the range of 0,25 mm to 0,81 mm, as determined by the printing capability of the supplier/printer of the label. The *x*-dimension for GS1-128 SSCC symbols should be in the range of 0,50 mm to 0,81 mm, as determined by the printing capability of the supplier/printer of the label.

In the case that fewer characters than specified in Table 1 are required, a larger *x*-dimension may be used, as long as the bar code print quality requirements specified in A.11 and label width recommendations of Table 2 are met.

NOTE Symbols with the *x*-dimension at the lower end of this range, specifically 0,25 mm to 0,33 mm, may require special care in order to meet the quality requirements.

A.7 Wide to narrow ratio for Code 39 symbols

The wide to narrow ratio of elements of Code 39 symbols should be 3,0:1. The measured ratio shall be between 2,4:1 and 3,2:1.

A.8 Quiet zones

Linear bar code symbols should be printed with leading and trailing quiet zones not less than 6,4 mm. Where the *x*-dimension is greater than 0,64 mm, the quiet zones shall not be less than 10 times the *x*-dimension. The label registration parameters of the printer being used should be taken into consideration in order to ensure the minimum quiet zones.

A.9 Orientation

Linear bar code symbols should be presented on transport units with the bars vertical (picket fence orientation) when marked on a flat or slightly curved surface. Subject to agreement between trading partners, bars may be presented horizontally (ladder orientation).

© ISO 2017 – All rights reserved
Documents
Document Sharing Hub
Full document details: BS ISO 15394:2017