BRITISH STANDARD

BS ISO 15769:2010

Hydrometry — Guidelines for the application of acoustic velocity meters using the Doppler and echo correlation methods

ICS 17.120.20

NO COPYING WITHOUT BSI PERMISSION EXCEPT AS PERMITTED BY COPYRIGHT LAW

British Standards Documents Document Sharing Hub

Full document details: BS ISO 15769:2010

National foreword

This British Standard is the UK implementation of ISO 15769:2010. It supersedes BS ISO/TS 15769:2000 which is withdrawn.

The UK participation in its preparation was entrusted to Technical Committee CPI/113/1, Velocity area methods.

A list of organizations represented on this committee can be obtained on request to its secretary.

This publication does not purport to include all the necessary provisions of a contract. Users are responsible for its correct application.

Compliance with a British Standard cannot confer immunity from legal obligations.

This British Standard was published under the authority of the Standards Policy and Strategy Committee on 31 May 2010.

© BSI 2010

ISBN 978 0 580 59637 7

Amendments/corrigenda issued since publication

Date	Comments

Documents
Document Sharing Hub

Full document details: BS ISO 15769:2010

INTERNATIONAL STANDARD

ISO 15769

First edition
2010-04-15

Hydrometry — Guidelines for the application of acoustic velocity meters using the Doppler and echo correlation methods

Hydrométrie — Lignes directrices pour l'application des compteurs de vitesse ultrasoniques fixes utilisant l'effet Doppler et la corrélation d'échos

Reference number
ISO 15769:2010(E)

Documents
Document Sharing Hub

© ISO 2010

Full document details: BS ISO 15769:2010

PDF disclaimer

This PDF file may contain embedded typefaces. In accordance with Adobe's licensing policy, this file may be printed or viewed but shall not be edited unless the typefaces which are embedded are licensed to and installed on the computer performing the editing. In downloading this file, parties accept therein the responsibility of not infringing Adobe's licensing policy. The ISO Central Secretariat accepts no liability in this area.

Adobe is a trademark of Adobe Systems Incorporated.

Details of the software products used to create this PDF file can be found in the General Info relative to the file; the PDF-creation parameters were optimized for printing. Every care has been taken to ensure that the file is suitable for use by ISO member bodies. In the unlikely event that a problem relating to it is found, please inform the Central Secretariat at the address given below.

COPYRIGHT PROTECTED DOCUMENT

© ISO 2010

All rights reserved. Unless otherwise specified, no part of this publication may be reproduced or utilized in any form or by any means, electronic or mechanical, including photocopying and microfilm, without permission in writing from either ISO at the address below or ISO's member body in the country of the requester.

ISO copyright office
Case postale 56 CH-1211 Geneva 20
Tel. + 41 22 749 01 11
Fax + 41 22 749 09 47
E-mail copyright@iso.org
Web www.iso.org

Published in Switzerland

© ISO 2010 – All rights reserved

Documents
Document Sharing Hub

Full document details: BS ISO 15769:2010

Contents

Page

Foreword v

1 Scope 1

2 Normative references 1

3 Terms, definitions and abbreviated terms 1
3.1 Terms and definitions 1
3.2 Abbreviated terms 3

4 Principles of operation of the techniques 3
4.1 Ultrasonic Doppler 3
4.2 Operating techniques 5
4.3 Bed-mounted Doppler systems 6
4.4 Side-looking/horizontal ADCPs 6
4.5 Acoustic (echo) correlation method 8
4.6 Velocity-index ratings 11

5 Factors affecting operation and accuracy 11
5.1 General 11
5.2 Characteristics of the instrument 11
5.3 Channel and water characteristics 16
5.4 Effect of weed 20

6 Site selection 20
6.1 General 20
6.2 General site requirements for Dopplers and echo correlation devices 20
6.3 Bed-mounted ultrasonic Doppler and echo correlation devices 21
6.4 Side-lookers 22

7 Measurements 22
7.1 Velocity 22
7.2 Water level 23
7.3 Determination of cross-sectional area 23

8 Installation, operation and maintenance 23
8.1 Installation considerations 23
8.2 General maintenance considerations 25

9 Calibration, evaluation and verification 26
9.1 General 26
9.2 Calibration and performance checking 26

10 Determination of discharge 27
10.1 General 27
10.2 Velocity-index ratings 28

11 Uncertainties in discharge determinations 32
11.1 General 32
11.2 Definition of uncertainty 32
11.3 General expectations of performance 33
11.4 Methodology of estimating the uncertainty in discharge determination 33

12 Points to consider when selecting equipment 38

Annex A (informative) **Selection considerations for ultrasonic Doppler and echo correlation devices** 39

Annex B (informative) **Practical considerations** 41

Documents
Document Sharing Hub

© ISO 2010 – All rights reserved

Full document details: BS ISO 15769:2010

Annex C (informative) **Introduction to measurement uncertainty** **45**

Annex D (informative) **Performance guide for hydrometric equipment for use in technical standards** **53**

Annex E (informative) **Sample questionnaire — Doppler- and echo-correlation-based flowmeters** **56**

Bibliography **61**

© ISO 2010 – All rights reserved

Documents
Document Sharing Hub

Full document details: BS ISO 15769:2010

Foreword

ISO (the International Organization for Standardization) is a worldwide federation of national standards bodies (ISO member bodies). The work of preparing International Standards is normally carried out through ISO technical committees. Each member body interested in a subject for which a technical committee has been established has the right to be represented on that committee. International organizations, governmental and non-governmental, in liaison with ISO, also take part in the work. ISO collaborates closely with the International Electrotechnical Commission (IEC) on all matters of electrotechnical standardization.

International Standards are drafted in accordance with the rules given in the ISO/IEC Directives, Part 2.

The main task of technical committees is to prepare International Standards. Draft International Standards adopted by the technical committees are circulated to the member bodies for voting. Publication as an International Standard requires approval by at least 75 % of the member bodies casting a vote.

Attention is drawn to the possibility that some of the elements of this document may be the subject of patent rights. ISO shall not be held responsible for identifying any or all such patent rights.

ISO 15769 was prepared by Technical Committee ISO/TC 113, *Hydrometry*, Subcommittee SC 1, *Velocity area methods*.

This first edition of ISO 15769 cancels and replaces ISO/TS 15769:2000, which has been technically revised.

© ISO 2010 – All rights reserved

Documents
Document Sharing Hub
Full document details: BS ISO 15769:2010

Documents
Document Sharing Hub

Full document details: BS ISO 15769:2010

INTERNATIONAL STANDARD ISO 15769:2010(E)

Hydrometry — Guidelines for the application of acoustic velocity meters using the Doppler and echo correlation methods

1 Scope

This International Standard provides guidelines on the principles of operation and the selection and use of Doppler-based and echo correlation velocity meters for continuous-flow gauging.

This International Standard is applicable to channel flow determination in open channels and partially filled pipes using one or more meters located at fixed points in the cross-section.

NOTE A limitation of the techniques is that measurement is made of the velocity of particles, other reflectors or disturbances.

2 Normative references

The following referenced documents are indispensable for the application of this document. For dated references, only the edition cited applies. For undated references, the latest edition of the referenced document applies.

ISO/TS 25377:2007, *Hydrometric uncertainty guidance (HUG)*

ISO 772, *Hydrometry — Vocabulary and symbols*

3 Terms, definitions and abbreviated terms

3.1 Terms and definitions

For the purposes of this document, the terms and definitions given in ISO 772 and the following apply.

3.1.1
beam angle
mounting angle of the acoustic transducer relative to the normalized profiling direction

NOTE Different beam angles will be suitable for different applications.

3.1.2
beam width
width of the acoustic signal transmitted, in degrees (°), from the centre of the transducer

NOTE This, coupled with the side lobe of the acoustic signal, will affect the suitability of a particular instrument for its application, based on the mounting location and the distance of the water volume measured from the sensor.

© ISO 2010 – All rights reserved

Documents
Document Sharing Hub
Full document details: BS ISO 15769:2010

3.1.3
bed-mounted device
upward-looking Doppler or echo correlation device that measures velocities within a beam looking upwards at an angle through the water column

3.1.4
bin
depth cell
portion of the water sampled by the instrument at a known distance and orientation from the transducers

NOTE The instrument determines the velocity in each cell.

3.1.5
blanking distance
portion of water close to the instrument that is not sampled by Doppler technology

NOTE 1 This is left blank to allow the transducer to stop “ringing” before it receives reflected signals.

NOTE 2 It is also used to avoid the instrument sampling velocity in the zone of flow interference created close to, and by, the instrument.

3.1.6
broad-band Doppler
instrument that records velocity at set distances from the sensor (see range-gated Doppler, 3.1.11) using coded acoustic pulses to make multiple velocity measurements from a single pulse pair (ping)

3.1.7
continuous Doppler
simple type of Doppler instrument that measures the Doppler shift of all the particles within the range of the beam, taking the frequency with the largest peak as the average

3.1.8
downward-looking device
instrument that can be deployed floating on the water surface looking down into the water column

3.1.9
echo (cross) correlation
acoustic technique for recognizing echo images that can be used to determine the velocity of particles moving in the flowing water

3.1.10
profiling Doppler
Doppler instrument that discriminates between signals from reflectors at different distances from the sensor and uses this information to moderate the estimate of average velocity

3.1.11
range-gated Doppler
sophisticated Doppler instrument that records particle velocities at pre-set distances from the sensor

NOTE Some instruments can produce velocity profiles along the length of the beam, while others just log measurements from one or more pre-defined cells.

3.1.12
side lobe
most transducers that are developed using current technology have parasitic side lobes that are emitted off the main acoustic beam

NOTE The side-lobe effect needs to be allowed for in the design and operation of the instrument.

© ISO 2010 – All rights reserved
Documents
Document Sharing Hub
Full document details: BS ISO 15769:2010

3.1.13
side-looker
Doppler usually mounted on the side of the channel

3.1.14
stage
water level measured relative to a fixed datum

EXAMPLE The level of the lowest point in the channel.

3.1.15
upward-looking device
bed-mounted instrument that looks up through the water column

3.2 Abbreviated terms

Abbreviation	Meaning	Notes
ADCP	acoustic Doppler current profiler	
ADP	acoustic Doppler profiler	This is a registered trademark of Sontek/YSI.[1)]
ADVM instrument	acoustic Doppler velocity meter	Term used to describe a profiling acoustic Doppler velocity.
ADVP	acoustic Doppler velocity profiler	Alternative acronym and name for ADCP.
H-ADCP	horizontal ADCP	Side/bank-mounted acoustic Doppler velocity profiler.
H-ADVM	horizontal ADVM	Side/bank-mounted acoustic Doppler velocity meter.

4 Principles of operation of the techniques

4.1 Ultrasonic Doppler

The method of velocity measurement used is based upon a phenomenon first identified by Christian Doppler in 1843. The principle of “Doppler shift” describes the difference, or shift, which occurs in the frequency of emitted sound waves as they are reflected back from a moving body.

The sensors of Doppler systems normally contain a transmitting and a receiving device (see Figure 1). A sound wave of high frequency (F_s) is transmitted into the flow of water and intercepted and reflected back at a different frequency by tiny particles or air bubbles (reflectors). A typical reflector n produces a frequency shift F_{dn}. The “shift” between transmitted and reflected frequencies is proportional to the movement of particles relative to the position of the sound source (i.e. the sensor).

1) Sontek/YSI is an example of a suitable product available commercially. This information is given for the convenience of users of this document and does not constitute an endorsement by ISO of this product.

© ISO 2010 – All rights reserved

Documents
Document Sharing Hub
Full document details: BS ISO 15769:2010

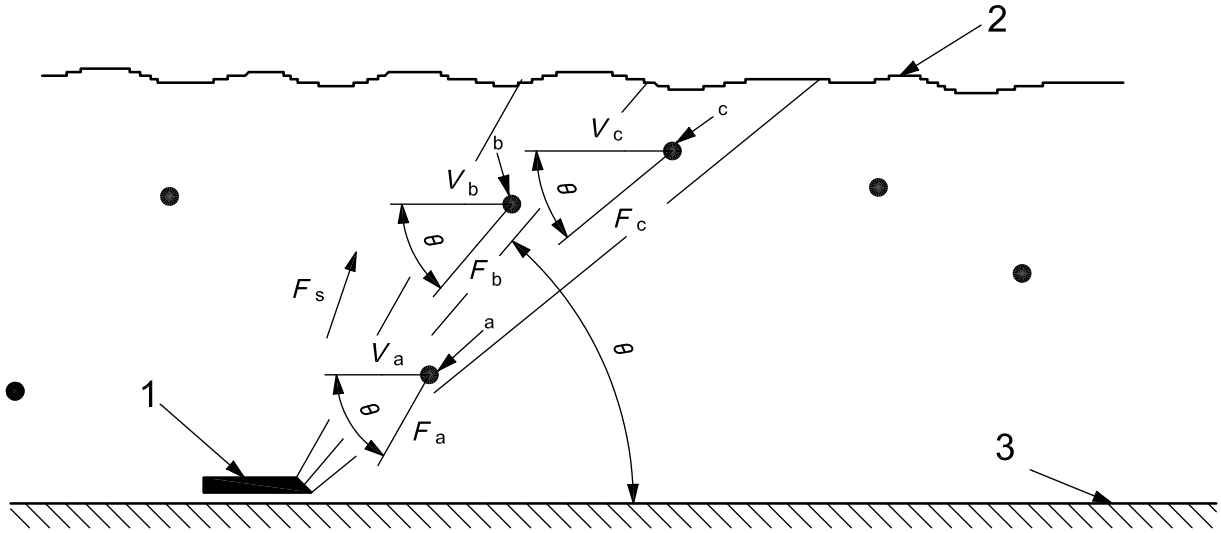

Key

1	Doppler sensor
2	water surface
3	channel bed
a, b and c	particulates
F_s	frequency of transmitted sound pulse
F_a, F_b and F_c	frequency of sound pulses reflected from particulates a, b and c
V_a, V_b and V_c	velocity of particulates a, b and c
.	angle between the horizontal and the angle of the sound beam

Figure 1 — Principle of Doppler ultrasonic flow measurement

Doppler shift only occurs if there is relative movement between the transmitted sound source and the reflected sound source along the acoustic beam (but not if it is perpendicular to it). The velocity of the moving reflector n can be calculated from

a) the magnitude of the Doppler shift,

b) the angle between the transmitted beam and the direction of movement, and

c) the velocity of sound in water.

It can be shown that

$$v_n = F_{dn} \bullet c/2F_s \cos . _n$$

where

F_{dn} is the Doppler frequency shift produced by reflector n;

F_s is the frequency of sound with no movement;

v_n is the relative velocity between the transmitted sound source and reflector n;

c is the velocity of sound in water;

$. _n$ is the angle between the reflector's line of motion (the assumed flow path) and the direction of the acoustic beam.

© ISO 2010 – All rights reserved
Documents
Document Sharing Hub
Full document details: BS ISO 15769:2010

A Doppler velocity meter measures the resultant frequency shift produced by a large number of reflectors, of which reflector n is typical, and from that computes a mean velocity. It is the velocity of moving particles, and not water velocity, which is measured. By including the velocity of many particles, it aims to make an estimate of the mean water velocity of the volume sampled by the acoustic beam. Although the particles, if small, will travel at almost the same speed as the water, sampling errors may occur depending on the spatial and velocity distribution of the particles.

The cross-sectional area is also required to apply the velocity-area calculation of discharge. Most systems incorporate a water-level sensor, and combining the water depth with knowledge of the cross-sectional profile allows the flow to be calculated.

4.2 Operating techniques

4.2.1 Introduction

All Dopplers fit into one of four general categories, based upon the method by which the measurements are made:

a) continuous wave Dopplers;

b) pulsed incoherent profiling Dopplers (including narrow band);

c) pulse-to-pulse coherent;

d) spread spectrum or broad band.

The last three of these four categories are all range gated. Range gating breaks the signal into successive segments and processes each segment independently of the others. This allows the instrument to measure the profile of the velocity at different distances from the instrument, with precise knowledge of the location of each velocity measurement. Reference should be made to the manufacturer's instrument manual to determine the type of instrument in use.

4.2.2 Continuous wave Dopplers

Pulse incoherent or continuous Dopplers are the simplest type of Doppler system. A continuous Doppler transmits a continuous signal with one transducer, while receiving the reflected signal with a separate transducer. The instrument measures the Doppler shift, which is used to calculate the velocity of the particles along the path of the acoustic beam. The instrument takes an average of the measured velocities calculated from the frequency and the strength of the loudest reflected signals. The instrument cannot determine the precise location within the water column. In some situations, this simplicity does not cause any problems but, in channels where the sediment distribution is uneven, the loudest signal may not represent the average velocity in the channel. In addition, in channels with a heavy sediment load, most of the signal would be reflected back before fully penetrating the water column. Thus, the loudest signal would be from close to the instrument and would not be representative of the average velocity in the channel.

4.2.3 Pulse incoherent

Incoherent Doppler or profiling systems are more sophisticated than continuous wave Dopplers, in that they take into account the distance travelled by the reflected signals when calculating the average velocity. An incoherent Doppler transmits a single pulse of sound and measures the Doppler shift, which is used to determine the velocity of the particles along the path of the acoustic beam. Based upon the elapsed time since the pulse was transmitted, and the speed of sound in water, the exact location of the velocity measurement is known. By range gating the return signal at different times, the profile of velocity with the distance away from the instrument can be determined.

© ISO 2010 – All rights reserved

Documents
Document Sharing Hub
Full document details: BS ISO 15769:2010

4.2.4 Pulse-to-pulse coherent

Coherent Doppler systems follow many of the same measurement principles as incoherent Doppler systems, but use a different method for determining the Doppler shift. Coherent systems transmit one relatively short pulse, record the return signal and then transmit a second short pulse, when the return from the first pulse is no longer detectable. The instrument measures the phase differences between the two returns and uses this to calculate the Doppler shift. Signals too close to the instrument are rejected.

4.2.5 Spread spectrum (broad band)

Like coherent systems, broad-band Dopplers transmit two pulses and look at the phase change of the return from successive pulses. However, with broad-band systems, both acoustic pulses are within the profiling range at the same time. The broad-band acoustic pulse is complex, it has a code superimposed on the wave form. The code is imposed on the wave form by reversing the phase and creating a pseudo-random code within the wave form. This pseudo-random code allows many independent samples to be collected from a single sound pulse. Because of the complexity of the pulse, the processing is slower than in a narrow-band system. However, multiple independent samples are obtained from each ping.

4.2.6 Range gating

The range gating method breaks the signal into successive segments and processes each segment independently of the others. Side-looking/horizontal ADCPs use this approach, as do several of the more sophisticated bed-mounted devices.

4.3 Bed-mounted Doppler systems

Bed-mounted Doppler systems include all four types of Doppler instrument. They are normally used in smaller channels, for example up to 5 m wide and 5 m deep, where they are often practical and easy to install. However, this does not mean they cannot be used in larger channels, even though it may be difficult to install bed-mounted instruments in particularly deep channels. If siltation is a problem, it may be possible to mount such devices on a raised platform or on the channel sides.

4.4 Side-looking/horizontal ADCPs

These instruments are usually fixed to the side of the channel and look across the channel to determine velocities in one horizontal layer across the full width, or a portion of the width, of the cross-section (excluding the blanking distance). Most systems consist of two transducers, one sending a beam diagonally across the channel in an upstream direction and the other diagonally across the channel in a downstream direction [see Figures 2 a) and 2 b)]. A fixed, side-looking ADCP does not estimate velocity throughout the full channel cross-section. With a known orientation of the transducers, each beam can be divided into an equal number of cells or bins and the component average velocity in the x-, y- and resultant directions can be determined for each cell. An integrated cell will give an average velocity, or individual cell velocities can then be averaged to determine the index velocity/measured velocity for the sampled length for the full distance sampled, or by selecting cells for a portion of the length. The mean velocity in the x-direction, i.e. at right angles to the measuring cross-section or parallel with the assumed direction of flow, is usually used to derive the velocity-index rating. Effectively, the instrument looks at a single horizontal layer across the channel (see-Figure 3). This layer is divided into one or more sample cells or bins and the average velocity is computed for each. The operator can usually select the size and position of these measurement cells.

© ISO 2010 – All rights reserved
Documents
Document Sharing Hub
Full document details: BS ISO 15769:2010

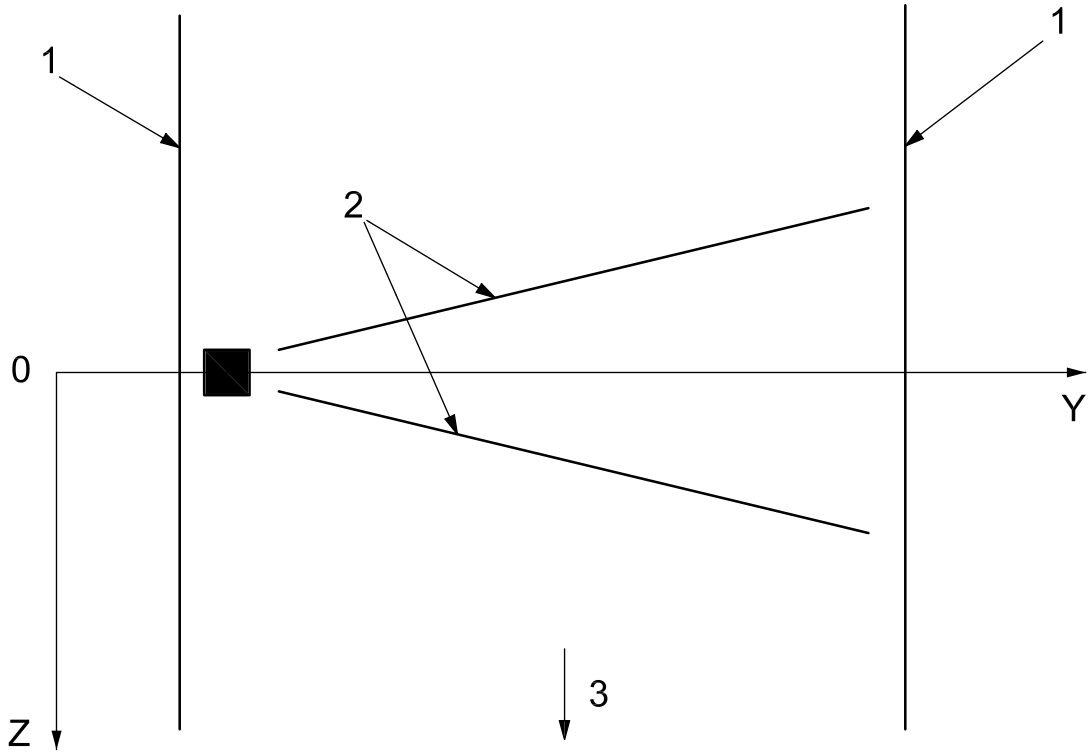

Key

1 bank of channel
2 beams
3 direction of flow

a) Plan view

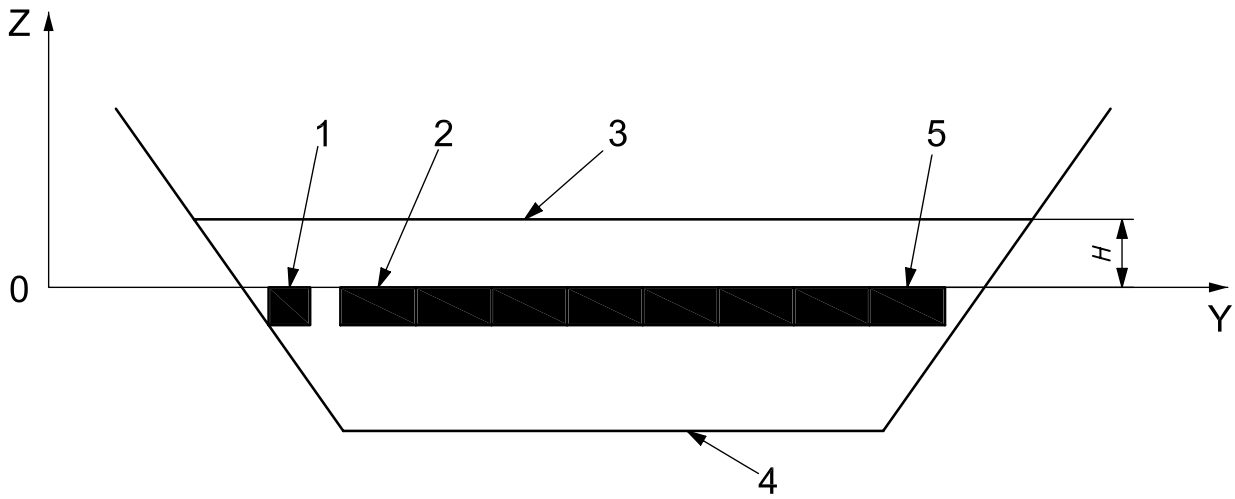

b) Side view

Key

1	instrument	4	channel bed
2	first cell	5	last cell
3	water surface	H	height of water above cell

Figure 2 — Diagram illustrating a typical H-ADCP/side-looker beam and cell arrangement

© ISO 2010 – All rights reserved

Documents
Document Sharing Hub
Full document details: BS ISO 15769:2010

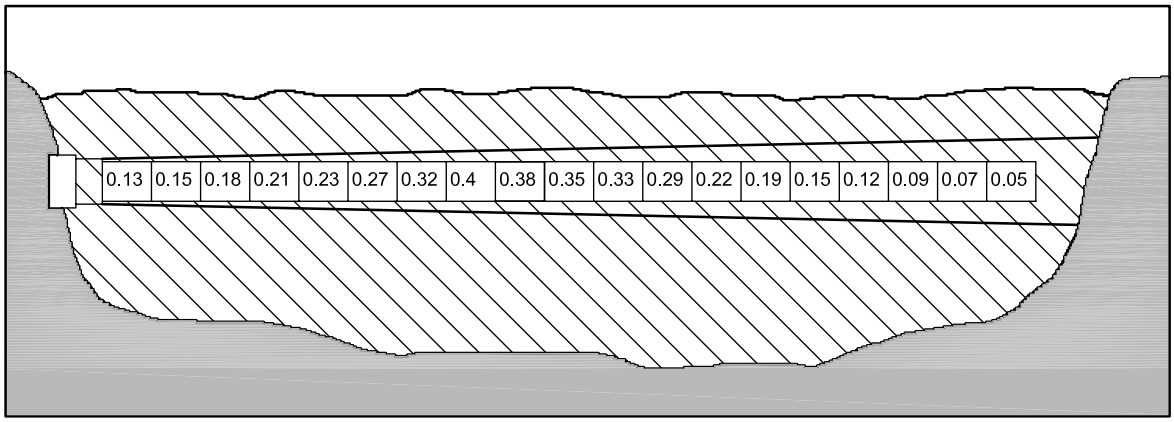

In this example, the beam is sampling the majority of the width of the channel. The average velocity in each cell is that averaged over the full beam width in the cell.

Figure 3 — Sketch illustrating the channel cross-section sampled by a side-looking ADCP, illustrating the spread of the beam, and the measurement cells sampled

Velocities close to the instrument typically remain unmeasured. This is for the following two reasons.

a) The area near the transducer (blank after transmit) is left blank to allow the transducer to stop “ringing” before it receives reflected signals. The minimum blanking distance can be obtained from the manufacturer's literature.

b) To avoid measuring in the zone of turbulence created by the instrument itself.

4.5 Acoustic (echo) correlation method

The echo (cross) correlation velocity meter is very similar to a bed-mounted ultrasonic Doppler in size and application. However, even though it is dependent on transmitted sound pulses being reflected back from moving particles, it works on somewhat different principles. An ultrasonic transducer transmits a short ultrasonic pulse (or pulse code) into the water. These pulses are reflected by particles or air bubbles. The reflected ultrasonic echo from the first pulse is received as a characteristic pattern. This is digitized and stored as the first scan of the dated echo pattern. About 0,4 ms to 4 ms later, another ultrasonic pulse is transmitted and the incoming echo patterns are digitized and stored. This is the second scan pattern. Using the travel time difference between the transmission and reception time, the position of the particles in the flow cross-section can be determined. By means of cross-correlation, the echo patterns are checked within different time windows for agreement. The cross-correlation also delivers the temporal movement of the characteristic pattern in the second scan. This temporal movement of the pattern under consideration can be directly converted to the velocity of flow for this particular beam. The process is repeated a large number of times per second and single velocities at different distances are computed in real time. The instrument effectively divides the water column in front of it into a number of cells, so it is possible to accurately determine the velocity profile in the vertical (see Figures 4, 5 and 6).

© ISO 2010 – All rights reserved
Documents
Document Sharing Hub
Full document details: BS ISO 15769:2010

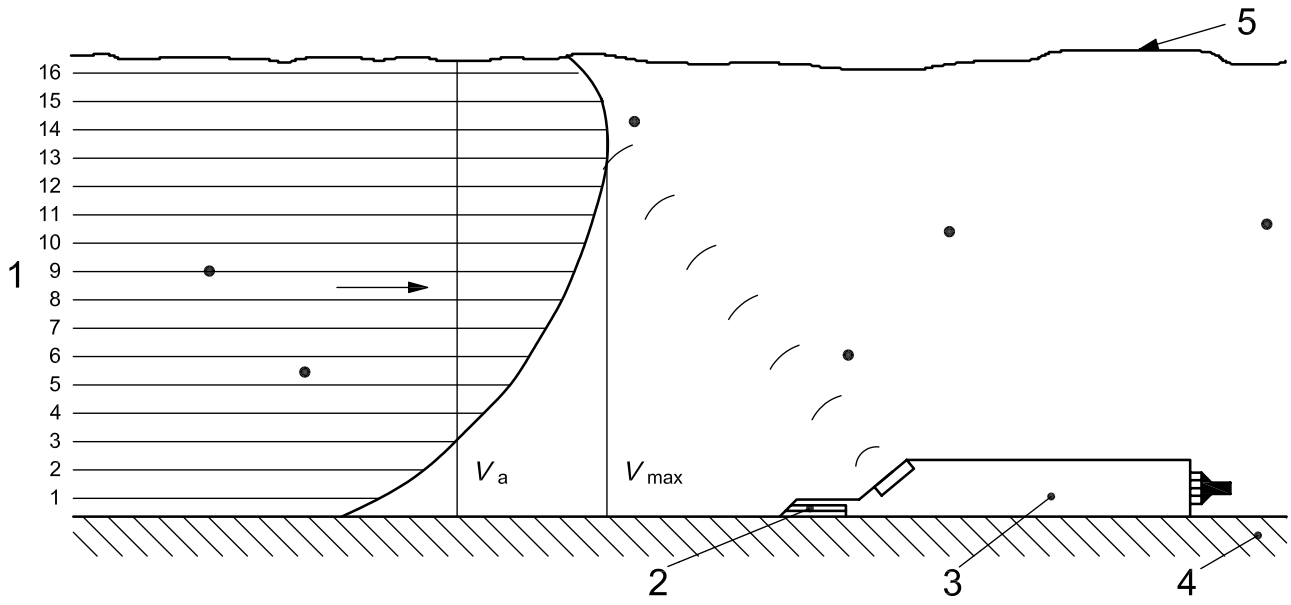

Key

1	scan windows (cells)	5	water surface
2	water level sensor	V_a	velocity at cell a
3	velocity sensor	V_{max}	maximum velocity
4	channel bed		

Figure 4 — Sketch illustrating an echo correlation velocity meter

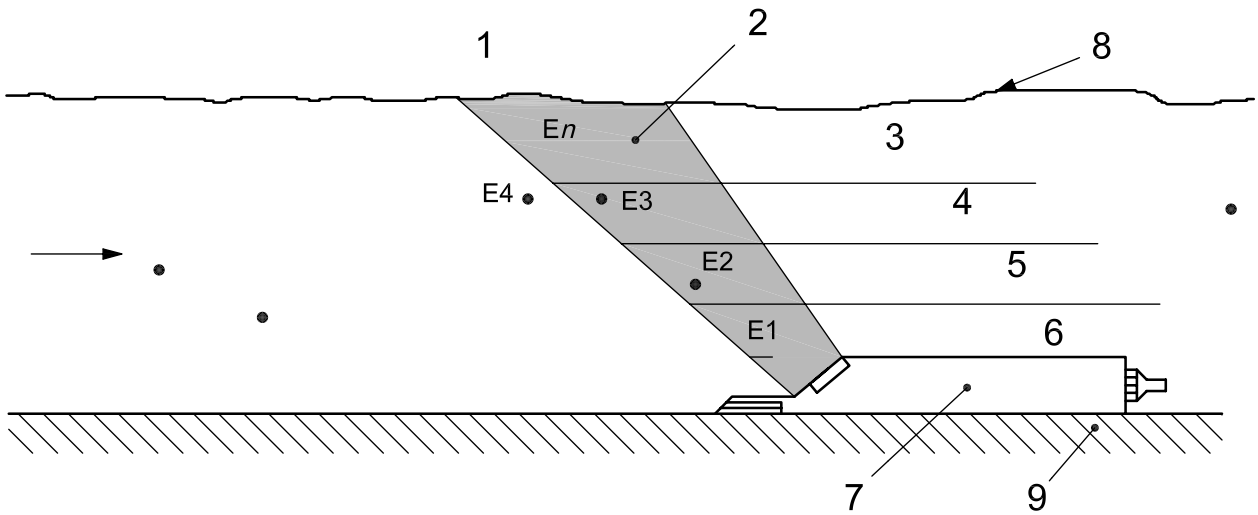

a)

Key

1	E1 to E4 = reflection particle	6	measuring window 1
2	scan 1	7	sensor
3	measuring windows 4 to 16	8	water surface
4	measuring window 3	9	bed level
5	measuring window 2		

Figure 5 — Sketches illustrating the principles of the echo correlation velocity meter (*continued*)

© ISO 2010 – All rights reserved

Documents
Document Sharing Hub
Full document details: BS ISO 15769:2010

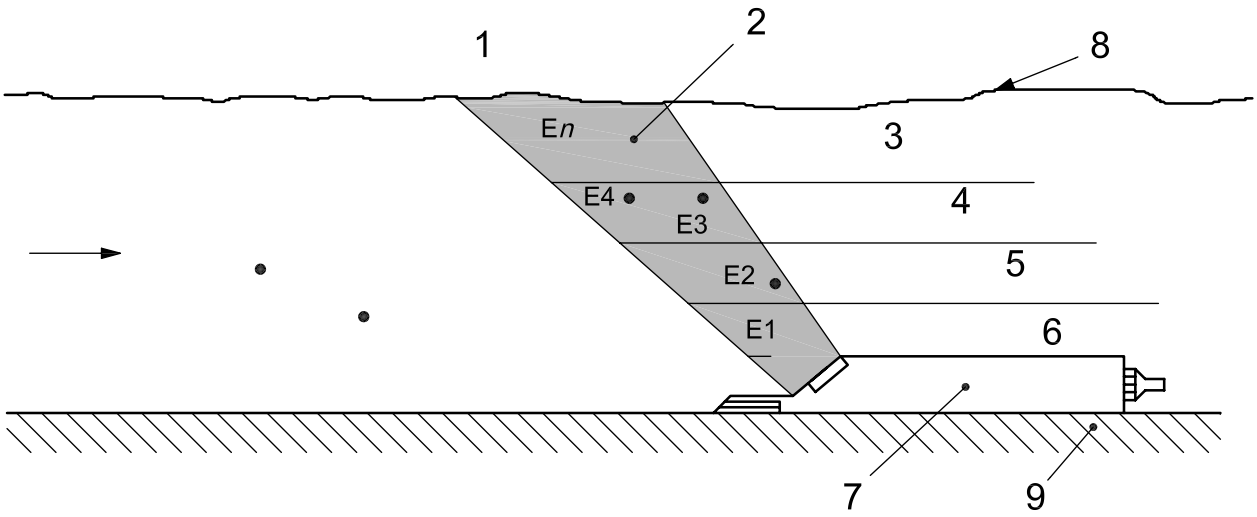

b)

1 E1 to E4 = reflection particle
2 scan 2
3 measuring windows 4 to 16
4 measuring window 3
5 measuring window 2
6 measuring window 1
7 sensor
8 water surface
9 bed level

Figure 5 — Sketches illustrating the principles of the echo correlation velocity meter

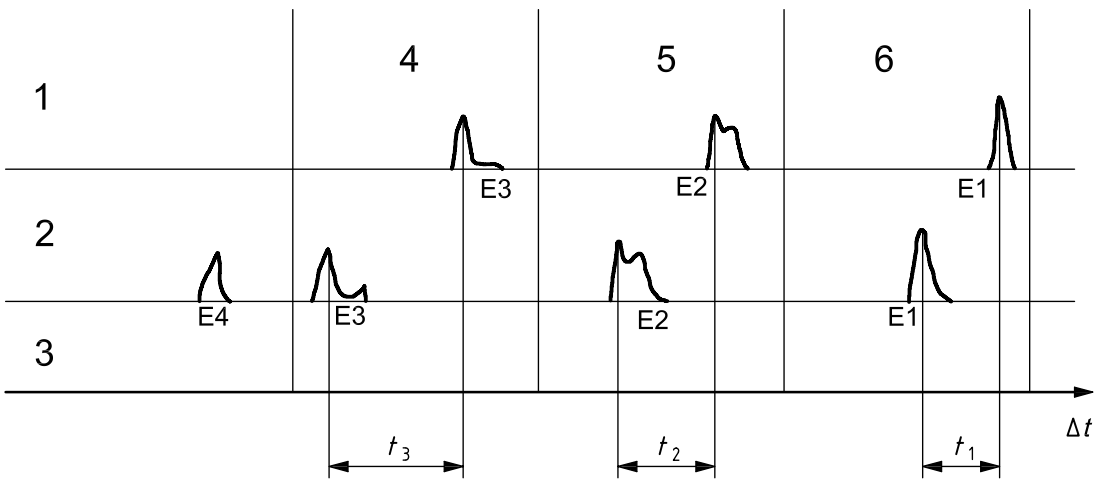

Key

1 signal reception, 1st scan
2 signal reception, 2nd scan
3 signal evaluation
4 measuring window 3
5 measuring window 2
6 measuring window 1

For nth window: E_n is the echo in window n, t_n is the time between echoes in window n and n is the window number.

Figure 6 — Sketch illustrating the principles of the echo (cross) correlation technique

© ISO 2010 – All rights reserved
Documents
Document Sharing Hub
Full document details: BS ISO 15769:2010

4.6 Velocity-index ratings

With the exception of multi-path transit-time ultrasonic systems with a significant number of operational paths (see ISO 6416), acoustic continuous-flow measuring devices require calibration. Unless the cross-section is relatively small, ultrasonic Doppler and echo correlation systems only measure velocity in part of the cross-section. By measuring the vertical profile, these devices obtain enough information that can be coupled with velocity distribution models to make a reasonable flow determination. As such, the measured velocity needs to be related to the mean velocity in the measuring section for any given stage and flow. A relationship between stage and cross-sectional area is also required. The relationship between mean cross-sectional velocity and the measured velocity (index velocity) is referred to as the velocity-index rating. Bottom-mounted, range-gated devices (that thus measure the vertical profile of velocity) can provide reasonable flow data without calibration in relatively small channels (<2 m to 3 m in width and depth) that are concrete lined with a regular (i.e. trapezoidal) cross-section. Nevertheless, even if the instrument can effectively sample velocity throughout the cross-section, verification gaugings are required to confirm that the discharge is being determined accurately.

In order to establish an index velocity relationship, independent measurements of discharge are made using an independent gauging method and the instrument velocities and stage readings are noted. The discharge obtained by gauging is divided by the cross-sectional area at the velocity-sensing device (obtained from the stage-area relationship), to obtain the mean velocity for that section. A relationship can then be derived to obtain the mean velocity from the measured velocity. The measured velocity is often referred to as the index velocity. There are two types of relationship that are commonly used:

a) mean velocity = function (index velocity);

b) mean velocity = function (index velocity, stage).

The former is used at sites where the relationship between mean velocity and measured velocity is relatively stable, whereas the latter is generally used at sites where the flow conditions vary with not only velocity, but also with stage. A reasonably intensive calibration effort is required to apply the indexing method.

5 Factors affecting operation and accuracy

5.1 General

The factors affecting the performance of Doppler and echo correlation velocity meters may be broadly divided into characteristics of the instrument and those of the channel or the liquid flowing in it. However, the effects interact and must be considered together.

In addition to the issues raised in 5.2 and 5.3, further practical considerations are highlighted in Annex B.

5.2 Characteristics of the instrument

5.2.1 Introduction

The characteristics of the instrument and, in particular, the sensor, will have a bearing on its performance in any given situation. There is no optimum set of characteristics. Some environmental factors will make a particular instrument perform better under some conditions but worse under others.

5.2.2 Ultrasonic beam angle (continuous wave Dopplers)

For the simpler, continuous wave bed-mounted Doppler systems, the ultrasonic “beam” is usually transmitted in the approximate shape of a cone. The term “beam angle”, or “projection angle”, in this context, refers to the angle between the cone axis and the flow direction. This subclause describes the effects of beam angle, though in fact the beam “width” must be considered at the same time (see 5.2.3). Range-gated/profiling Dopplers inherently use narrow band widths (typically 1,4° to 2,8°). Therefore, this subclause is mainly concerned with continuous wave Dopplers.

AVA Documents
Document Sharing Hub

© ISO 2010 – All rights reserved

Full document details: BS ISO 15769:2010

The sensor has to be installed so that it is below the liquid surface under all conditions of interest and in such a way that the beam cone reaches the lateral extremities of the channel as far as possible. The installed position is often a compromise and the installer is frequently obliged to install the sensor on the channel bed, somewhere near the centre of the cross-section. An off-centre position is sometimes used.

Assuming that an ultrasonic Doppler sensor is installed on the bed of the channel, a high angle between the flow direction and ultrasonic beam (for example between 30° and 50°) will enable signals to be obtained throughout the depth up to the limit of the penetration of the beam. However, no signals will be obtained close to the bed on either side of the sensor. Serious sampling errors will occur, particularly when the ratio between the depth of water and width of the channel is low [see Figures 7 a) and 7 b)].

Conversely, a shallow beam angle will allow flow to be measured close to the bed and be best for shallow depths. However, a beam at a shallow angle may not reach the lateral extremities if the channel is too wide or not sufficiently long. In a long channel, the beam might theoretically reach the extremities but the penetration (range) of the beam may not be sufficient to do so [see Figures 7 a) and 7 b)].

Beam “width” also has a bearing on the velocity sampling (see 5.2.3).

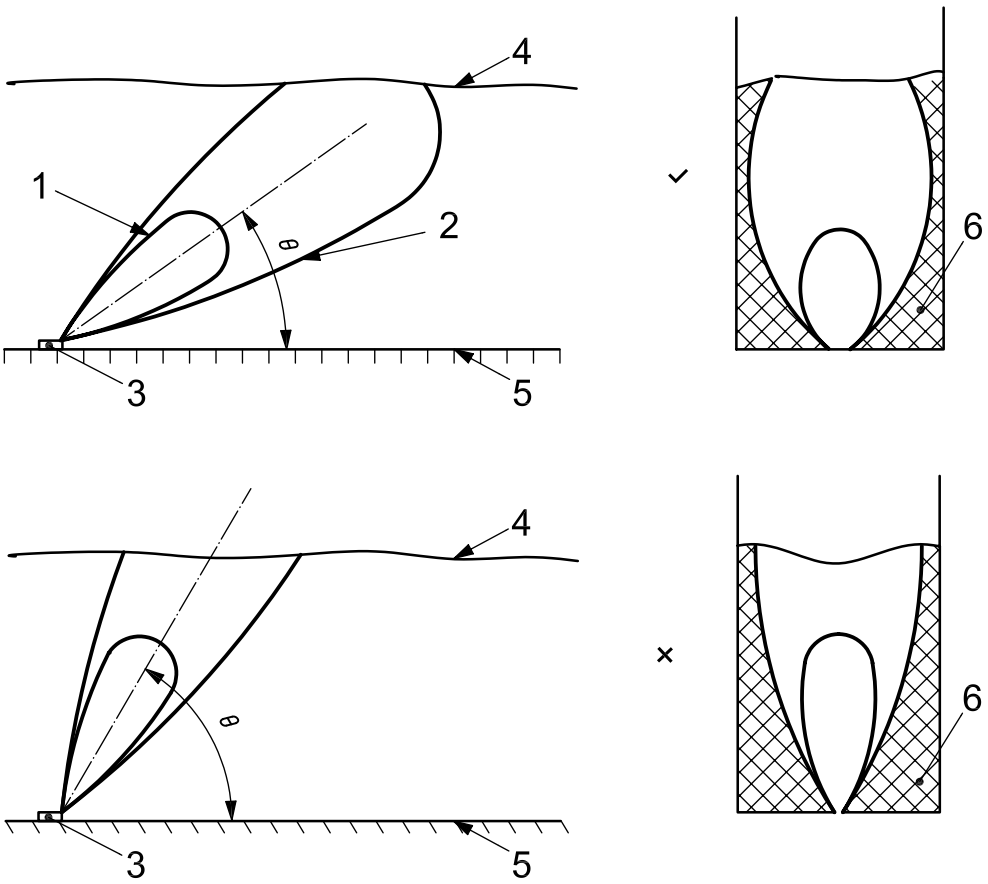

a) At low/medium depth a small θ is preferable

Figure 7 — Bed-mounted continuous wave Doppler beam angle effects (*continued*)

© ISO 2010 – All rights reserved
Documents
Document Sharing Hub
Full document details: BS ISO 15769:2010

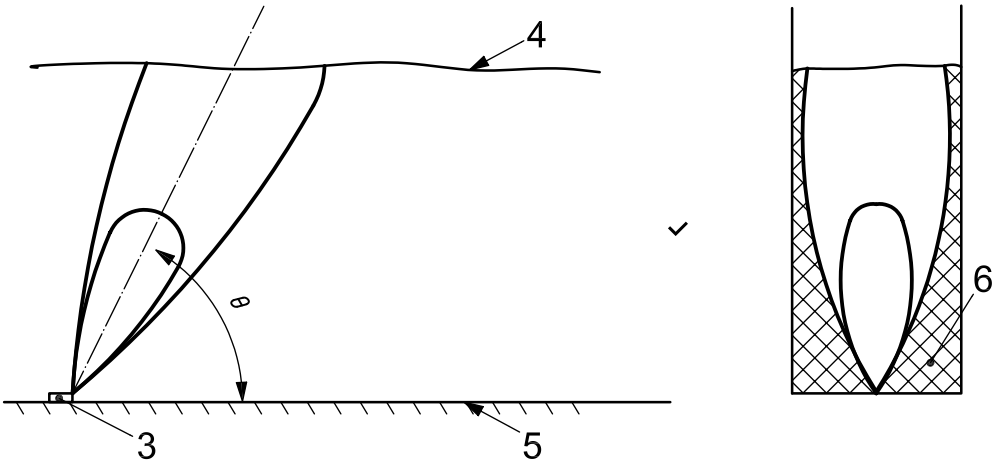

b) At high depth large . produces better sampling

Key

1	portion sampled by main beam	5	channel bed
2	side lobes	6	unsampled area (hatched)
3	sensor	✓	preferred situation
4	water surface	×	less favourable situation

Figure 7 — Bed-mounted continuous wave Doppler beam angle effects

5.2.3 Beam "width"

Beam width is a loose term indicating the spread of the beam. It is a function of sound frequency and diameter of the transmitter. The designer of the instrument may be constrained by other factors in his scope to vary the beam width.

A wide beam, i.e. one with a cone having a large spread, will give best coverage in that signals will be obtained over a greater area of the channel. However, there will be an uncertainty in velocity measurement, since the wide beam means that the actual angle made by a particular reflector may be different from the mean beam angle assumed by the instrument. Furthermore, a bias could occur depending on the distribution of velocity and reflector concentration.

A narrow beam width would have less angular uncertainty but a poorer coverage (sampling). A narrow beam allows for a longer profiling distance (greater range). Side-lookers and other range-gated and profiling instruments tend to have narrow band widths. This allows the instrument to profile, across the channel, a greater distance before the beam spread strikes a boundary. This makes them far more suitable for use in larger rivers than continuous wave Doppler systems.

If the distribution of reflectors and velocity are both fairly uniform, sampling is unimportant and a narrow beam width would give best results because the uncertainty relating to beam angle is minimized. In contrast, if the velocity distribution is non-uniform, a wide beam width will give a better sample of velocity than a narrow one. If, at the same time, the reflector distribution is uniform, the error relating to beam angle may be acceptable and so a wide beam width will be preferable.

If neither the velocity profile nor the reflector density is uniform, a significant uncertainty of measurement can be expected whatever the beam width.

Care must be taken to ensure that the range (distance from the sensor) and beam width are taken into account to ensure that the acoustic beam is not hitting a surface, i.e. channel bed or water surface (see 5.2.7.3).

© ISO 2010 – All rights reserved

Documents
Document Sharing Hub
Full document details: BS ISO 15769:2010

5.2.4 Ultrasonic frequency

A lower frequency will generally penetrate further (greater range) but will require a larger transducer for a given beam width. A larger width/depth of channel will therefore benefit from a lower frequency transducer where the larger sensor size will not present a serious obstruction.

5.2.5 Method of determining velocity of sound

The velocity of sound in water varies with density, which is a function of temperature, salinity and pressure. Since the velocity of sound appears in the velocity determination formulae for Doppler-based instruments, errors will occur if no adjustment is made. Some instruments have no dynamic adjustment, though it is possible to put in a fixed calibration factor. This is acceptable provided the conditions do not change. Other instruments have a temperature sensor and a dynamic correction for temperature effects. This is acceptable for conditions where the water content is unchanging but the temperature does change.

When the temperature and salinity are variable, the only satisfactory solutions are for the instrument to measure the velocity of sound or to separately measure or estimate the temperature and salinity and to make a retrospective correction to the recorded data.

The effect of not making full or partial allowance for this variation is described in 5.2.6.

5.2.6 Signal processing

5.2.6.1 Continuous wave Doppler-based technologies

The basic theory shows the calculation of frequency shift resulting from a single moving reflector. In practice, of course, many reflectors are involved, moving at different speeds in different parts of the beam. The processor has to employ averaging methods of measuring frequency shifts.

Processing methods vary. Simple analogue methods are likely to give a higher weight to stronger signals from nearby reflectors. This may be serious if the velocity profile is not uniform. This will provide an additional non-uniform effect relating to beam angle and width.

Instruments employing more sophisticated processing methods attempt to remove the signal strength effect, for example by using Fourier transform techniques. Though this is an improvement, such instruments remain sensitive to non-uniform effects in the water itself.

5.2.6.2 Time/range gating technologies

Some instruments employing “time gating” or “range gating” methods attempt to separate the signals from different parts of the space in the beam, so as to produce information about the distribution of velocity. It is possible, by transmitting in timed bursts and examining received reflections at different delays, to estimate the velocity variation with distance from the sensor. However, it is not possible to say from what angle within the beam width the signals have come. Consequently, whilst this information is useful for profiling type instruments in determining velocity profiles in deep water where the beam is generally aimed across the flow (usually downwards), it is of little value in velocity meters where the beam angle is generally along the channel. This is because the information will come from different distances along the channel, not across it. However, such methods will prevent the processor being swamped by very close strong signals since they can be identified by the short time delay.

An exception to these observations would be the case of an instrument incorporating multiple narrow beams or a single narrow beam whose direction is capable of automatic variation. In such cases, velocities from small defined volumes within the channel could be measured.

It is important to remember that, whilst instruments employing techniques like time gating or Fourier transform analysis are likely to perform better in terms of short range bias, their range will still be limited by beam penetration. As the channel size increases, this will produce another type of range-related sampling error.

© ISO 2010 – All rights reserved
Documents
Document Sharing Hub
Full document details: BS ISO 15769:2010