BS ISO 16000-33:2024

BSI Standards Publication

Indoor air

Part 33: Determination of phthalates with gas chromatography/mass spectrometry (GC/MS)

Documents
Document Sharing Hub

Full document details: BS ISO 16000-33:2024

National foreword

This British Standard is the UK implementation of ISO 16000-33:2024. It supersedes BS ISO 16000-33:2017, which is withdrawn.

The UK participation in its preparation was entrusted to Technical Committee EH/2/5, Emissions to internal environments.

A list of organizations represented on this committee can be obtained on request to its committee manager.

Contractual and legal considerations

This publication has been prepared in good faith, however no representation, warranty, assurance or undertaking (express or implied) is or will be made, and no responsibility or liability is or will be accepted by BSI in relation to the adequacy, accuracy, completeness or reasonableness of this publication. All and any such responsibility and liability is expressly disclaimed to the full extent permitted by the law.

This publication is provided as is, and is to be used at the recipient's own risk.

The recipient is advised to consider seeking professional guidance with respect to its use of this publication.

This publication is not intended to constitute a contract. Users are responsible for its correct application.

© The British Standards Institution 2024
Published by BSI Standards Limited 2024

ISBN 978 0 539 16701 6

ICS 13.040.20

Compliance with a British Standard cannot confer immunity from legal obligations.

This British Standard was published under the authority of the Standards Policy and Strategy Committee on 31 July 2024.

Amendments/corrigenda issued since publication

Date	Text affected

Documents
Document Sharing Hub

Full document details: BS ISO 16000-33:2024

International Standard

ISO 16000-33

Second edition
2024-07

Indoor air —

Part 33: Determination of phthalates with gas chromatography/mass spectrometry (GC/MS)

Air intérieur —

Partie 33: Détermination des phthalates par chromatographie en phase gazeuse/spectrométrie de masse (CPG/SM)

Reference number
ISO 16000-33:2024(en)

© ISO 2024

Documents
Document Sharing Hub

Full document details: BS ISO 16000-33:2024

COPYRIGHT PROTECTED DOCUMENT

© ISO 2024

All rights reserved. Unless otherwise specified, or required in the context of its implementation, no part of this publication may be reproduced or utilized otherwise in any form or by any means, electronic or mechanical, including photocopying, or posting on the internet or an intranet, without prior written permission. Permission can be requested from either ISO at the address below or ISO's member body in the country of the requester.

ISO copyright office
CP 401 • Ch. de Blandonnet 8
CH-1214 Vernier, Geneva
Phone: +41 22 749 01 11
Email: copyright@iso.org
Website: www.iso.org

Published in Switzerland

Documents
Document Sharing Hub
Full document details: BS ISO 16000-33:2024

Contents

Page

Foreword ... **v**
Introduction ... **vi**
1 Scope ... **1**
2 Normative references ... **1**
3 Terms and definitions ... **1**
4 Abbreviated terms ... **2**
5 Sampling methods and analytical apparatus ... **3**
5.1 General ... 3
5.2 Sampling by adsorption with subsequent thermal desorption ... 3
5.2.1 Apparatus, operating materials and chemicals ... 3
5.2.2 Preparation of the thermal desorption tube ... 4
5.2.3 Sampling ... 4
5.3 Sampling by adsorption and subsequent solvent extraction ... 5
5.3.1 Apparatus, operating materials and chemicals ... 5
5.3.2 Preparation of Florisil® and the adsorption tubes ... 6
5.3.3 Suggestions regarding the application of Florisil® ... 6
5.3.4 Sampling ... 7
5.3.5 Sample conditioning ... 7
6 Calibration ... **8**
6.1 General ... 8
6.2 Calibration of the thermal desorption method ... 8
6.3 Calibration of the solvent extraction method ... 8
7 Identification and quantification ... **9**
7.1 Mass spectrometric analysis ... 9
8 Establishment of calibration curves and calculation of the analyte mass ... **14**
8.1 Establishment of a calibration curve ... 14
8.2 Calculation of the analyte mass ... 14
9 Calculation of indoor air concentrations ... **15**
10 Performance characteristics ... **16**
10.1 Detection limit ... 16
10.2 Quantification limit and problems related to blank values ... 16
10.3 Reproducibility standard deviation and repeatability standard deviation ... 17
11 Quality assurance ... **18**
11.1 Method verification and determination of blanks ... 18
11.1.1 General ... 18
11.1.2 Field blank value of the indoor air ... 18
11.1.3 Analytical laboratory blank value ... 18
11.2 Measures for blank value minimization ... 18
11.3 Documents ... 19
12 Interferences ... **19**
Annex A (informative) **General information on phthalates** ... **20**
Annex B (informative) **Sampling by adsorption with ODS solid phase disk or SDB copolymer cartridge** ... **23**
Annex C (informative) **Screening phthalates in solvent wipe tests** ... **29**
Annex D (informative) **Screening phthalates in house dust** ... **32**
Annex E (informative) **Practical example for the calibration of the thermal desorption method** ... **36**

© ISO 2024 – All rights reserved

Documents
Document Sharing Hub
Full document details: BS ISO 16000-33:2024

Annex F (informative) **Practical example for the calibration of the solvent extraction method using Florisil®** **38**

Annex G (informative) **Practical example for the gas chromatography with thermal desorption** **40**

Annex H (informative) **Practical example for the gas chromatography following solvent extraction** **41**

Annex I (informative) **Problems related to the blank values** **42**

Annex J (informative) **Example of sampling protocol documentation** **43**

Bibliography **44**

© ISO 2024 – All rights reserved

Documents
Document Sharing Hub

Full document details: BS ISO 16000-33:2024

Foreword

ISO (the International Organization for Standardization) is a worldwide federation of national standards bodies (ISO member bodies). The work of preparing International Standards is normally carried out through ISO technical committees. Each member body interested in a subject for which a technical committee has been established has the right to be represented on that committee. International organizations, governmental and non-governmental, in liaison with ISO, also take part in the work. ISO collaborates closely with the International Electrotechnical Commission (IEC) on all matters of electrotechnical standardization.

The procedures used to develop this document and those intended for its further maintenance are described in the ISO/IEC Directives, Part 1. In particular, the different approval criteria needed for the different types of ISO document should be noted. This document was drafted in accordance with the editorial rules of the ISO/IEC Directives, Part 2 (see www.iso.org/directives).

ISO draws attention to the possibility that the implementation of this document may involve the use of (a) patent(s). ISO takes no position concerning the evidence, validity or applicability of any claimed patent rights in respect thereof. As of the date of publication of this document, ISO had not received notice of (a) patent(s) which may be required to implement this document. However, implementers are cautioned that this may not represent the latest information, which may be obtained from the patent database available at www.iso.org/patents. ISO shall not be held responsible for identifying any or all such patent rights.

Any trade name used in this document is information given for the convenience of users and does not constitute an endorsement.

For an explanation of the voluntary nature of standards, the meaning of ISO specific terms and expressions related to conformity assessment, as well as information about ISO's adherence to the World Trade Organization (WTO) principles in the Technical Barriers to Trade (TBT), see www.iso.org/iso/foreword.html.

This document was prepared by Technical Committee ISO/TC 146, *Air quality*, Subcommittee SC 6, *Indoor air*.

This second edition cancels and replaces the first edition (ISO 16000-33:2017), which has been technically revised.

The main change is as follows: a description of an adsorbent which can alternatively be used has been added.

A list of all parts in the ISO 16000 series can be found on the ISO website.

Any feedback or questions on this document should be directed to the user's national standards body. A complete listing of these bodies can be found at www.iso.org/members.html.

© ISO 2024 – All rights reserved

Documents
Document Sharing Hub
Full document details: BS ISO 16000-33:2024

Introduction

Different parts of the ISO 16000 series describe the general requirements relating to the measurement of indoor air pollutants and the important conditions to be observed before or during the sampling of individual pollutants or groups of pollutants, as well as the measurement procedures themselves.

The definition of indoor environment is given by ISO 16000-1. Dwellings [living rooms, bedrooms, do-it-yourself (DIY) rooms, sports rooms and cellars, kitchens and bathrooms], workrooms or workplaces in buildings which are not subject to health and safety inspections with respect to air pollutants (e.g. offices, salesrooms), public buildings (e.g. restaurants, theatres, cinemas and other meeting rooms) and passenger cabins of motor vehicles and public transport are among the most important types of indoor environment.

Phthalates, the diesters of the ortho-phthalic acid (1,2-benzene dicarboxylic acid), are emitted into the indoor air primarily from articles of daily use made of soft polyvinyl chloride (PVC). Typically, phthalates are used as plasticizers in soft PVC. Four most frequently used phthalates are diisodecylphthalate (DiDP), diisononylphthalate (DiNP), di-2-ethylhexyl terephthalate (DOTP) and di-isononyl cyclohexane dicarboxylate (DINCH) but other families of esters are available. Di(2-ethylhexyl)-phthalate (DEHP), di-n-butyl-phthalate (DBP) and benzyl-n-butyl-phthalate (BBP) were used in Europe until more recent regulatory developments placed restrictions on their use in the manufacture of new articles. However, these can still be present in articles currently in use and are subject to assessment. An overview of the most important phthalates, their acronyms and several relevant substance properties can be found in Table A.1. These phthalates can be determined in indoor environments by means of the analytical methods incorporating gas chromatography-mass spectrometry specified in this document.

© ISO 2024 – All rights reserved

Documents
Document Sharing Hub
Full document details: BS ISO 16000-33:2024

Indoor air —

Part 33:
Determination of phthalates with gas chromatography/mass spectrometry (GC/MS)

1 Scope

This document specifies the sampling and analysis of phthalates in indoor air and describes the sampling and analysis of phthalates in house dust and in solvent wipe samples of surfaces by means of gas chromatography-mass spectrometry (GC-MS).

Two alternative sampling, sample preparation and sample introduction methods, whose comparability has been proven in an interlaboratory test, are specified for indoor air[1]:

— sorbent tubes sampling with subsequent thermal desorption GC-MS, and

— sampling by adsorption and subsequent solvent extraction and injection to GC-MS.

Additional adsorbents that can be used are described in Annex B.

Depending on the sampling method, the compounds dimethyl phthalate to diisoundecylphthalate can be analysed in house dust as described in Annex D[2]. The investigation of house dust samples is only appropriate as a screening method. This investigation only results in indicative values and is not acceptable for a final assessment of a potential need for action.

Dimethyl phthalate to diisoundecylphthalate can be analysed in solvent wipe samples as described in Annex C. Solvent wipe samples are suitable for non-quantitative source identification.

NOTE In principle, the method is also suitable for the analysis of other phthalates, adipates and cyclohexane dicarboxylic acid esters, but this is confirmed by determination of the performance characteristics in each case.

General information on phthalates are given in Annex A.

2 Normative references

The following documents are referred to in the text in such a way that some or all of their content constitutes requirements of this document. For dated references, only the edition cited applies. For undated references, the latest edition of the referenced document (including any amendments) applies.

ISO 16000-6, *Indoor air — Part 6: Determination of organic compounds (VVOC, VOC, SVOC) in indoor and test chamber air by active sampling on sorbent tubes, thermal desorption and gas chromatography using MS or MS FID*

3 Terms and definitions

No terms and definitions are listed in this document.

ISO and IEC maintain terminology databases for use in standardization at the following addresses:

— ISO Online browsing platform: available at https://www.iso.org/obp

— IEC Electropedia: available at https://www.electropedia.org/

© ISO 2024 – All rights reserved

Documents
Document Sharing Hub
Full document details: BS ISO 16000-33:2024

4 Abbreviated terms

For the purpose of this document, the following abbreviated terms apply.

BBP	benzyl-*n*-butyl phthalate
DAIP	diallyl phthalate
DBP	di-*n*-butyl phthalate
DCHP	dicyclohexyl phthalate
DEHP	di(2-ethyl hexyl) phthalate
DEP	diethyl phthalate
DiBP	diisobutyl phthalate
DiDP	diisodecylphthalate
DiNP	diisononylphthalate
DiUP	diisoundecyl phthalate
DMP	dimethyl phthalate
DOP	di(*n*-octyl) phthalate
DPhP	diphenyl phthalate
DPP	di-*n*-propyl phthalate
D_4-BBP	D_4-benzyl-*n*-butyl phthalate
D_4-DBP	D_4-di-*n*-butyl phthalate
D_4-DEP	D_4-diethyl phthalate
D_4-DEHP	D_4-di(2-ethyl hexyl) phthalate
D_4-DMP	D_4-dimethyl phthalate
D_4-DOP	D_4-di(*n*-octyl) phthalate
GC	gas chromatographic
IS	internal standard
LOD	limit of detection
LOQ	limit of quantification
MS	mass spectrometry
ODS	octadecyl silica
PE	polyethylene
PP	polypropylene
PTFE	polytetrafluoroethylene

© ISO 2024 – All rights reserved

Documents
Document Sharing Hub
Full document details: BS ISO 16000-33:2024

SDB styrene-divinylbenzene

SIM selected ion monitoring

SVOC semi-volatile organic compounds

TBME tertiary butyl methyl ether

TDS thermal desorption system

4-NP 4-nonylphenol

5 Sampling methods and analytical apparatus

5.1 General

Sampling of indoor air takes place either by adsorption on a thermal desorption tube filled with quartz wool and Tenax® TA[1)]or on adsorbents such as Florisil®[2)] octadecyl silica (ODS) and styrene–divinylbenzene (SDB) copolymer with subsequent solvent extraction.[1],[3],[22] The quantity of solvent used for solvent extraction procedures should be minimized in order to minimize blank values. All apparatus and reagents used should be clean, i.e. without detectable quantities of the compounds of interest.

The experiences from the interlaboratory test have indicated that significant blank value differences can also be introduced by the solvent. Each new bottle of solvent shall therefore be tested for phthalate contamination before use[1].

NOTE The experiences from the interlaboratory test have indicated that rinsing with clean solvent (no detectable phthalates) is sufficient to remove contamination from the apparatus and that a sterilization by heating with subsequent deactivation of the heated glass apparatus is not mandatory.

The ubiquitous distribution of phthalates shall be considered during sampling of indoor air in order to avoid contamination of the sample. The measures to be considered for blank value minimization, as well as the advantages and disadvantages of the individual methods, are described in detail in 5.3.3, Clause B.2, Clause D.6 and Annex I. Further hints to quality assurance and problems related to blank values that shall be considered are listed in Clause 11.

5.2 Sampling by adsorption with subsequent thermal desorption

5.2.1 Apparatus, operating materials and chemicals

Use the apparatus, reagents and materials described in ISO 16000-6 with the following specific requirements.

5.2.1.1 Thermal desorption tube, stainless steel, inert-coated steel or glass tube filled with a 1 cm loosely packed plug of non-friable quartz wool backed up by a minimum of 50 mg of Tenax® TA (see ISO 16000-6).

5.2.1.2 Sampling system, in accordance with Figure 1.

5.2.1.3 Pump, suitable for a volume flow in the range 50 ml/min to 200 ml/min under sampling conditions; recommended sampling volume of approximately 20 l to approximately 70 l.

5.2.1.4 Gas volume meter, the maximal measurement inaccuracy shall not exceed 5 %.

1) Tenax® TA is the trade name of a product supplied by Buchem. This information is given for the convenience of the users of this document and does not constitute an endorsement by ISO of the product named. Equivalent products may be used if they can be shown to lead to the same results.

2) Florisil® is the trade name of product supplied by US Silica. This information is given for the convenience of the users of this document and does not constitute an endorsement by ISO of the product named. Equivalent products may be used if they can be shown to lead to the same results.

© ISO 2024 – All rights reserved

Documents
Document Sharing Hub
Full document details: BS ISO 16000-33:2024

5.2.1.5 Laboratory sampling facilities, hygrometer, thermometer, barometer.

5.2.1.6 Internal standards, required as quality control measure of the whole analytical process including sampling. Suitable examples include the ring-deuterated compounds D_4-DMP, D_4-DEP, D_4-DBP, D_4-BBP, D_4-DEHP, D_4-DOP as well as the non-deuterated DAIP, see Clause 6 and Table 3. Standards shall be prepared in phthalate-free methanol, as described in ISO 16000-6, at a level such that a maximum 1 µl injection introduces approximately the same mass of analyte onto the sampling end of the tubes as is expected to be collected during sampling.

5.2.1.7 Thermal desorption system, coupled to GC-MS for two-stage thermal desorption of the sorbent tubes. Transfer of desorbed vapours via a carrier gas flow into a GC system, fitted with a MS detector.

NOTE Deactivated (silanised) glass wool or quartz wool can also be used as adsorbent after an appropriate method validation.

5.2.2 Preparation of the thermal desorption tube

The use of a tube packed with quartz wool and Tenax® TA assumes knowledge of ISO 16000-6. Prepacked and preconditioned sorbent tubes are available commercially or can be prepared in the laboratory as follows.

A plug of non-friable quartz wool, usually supported by a stainless steel mesh, is inserted at the sampling end of the tube. The required mass of sorbent is poured into the tube behind the quartz wool plug. The far end of the sorbent bed is typically supported by a second plug of quartz wool or a stainless steel mesh.

A minimum of 50 mg of Tenax® TA shall be used per tube in order to guarantee the sorption capacity.

NOTE Determination of the breakthrough volume is described in ISO 16017-1:2000, Annex B. The breakthrough volumes are proportional to the dimensions and masses of the sorbents. The rule of the thumb is that the guaranteed sample volume doubles itself when the sorbent bed length is doubled (while retaining the tube diameter).

After filling of the thermal desorption tubes (e.g. with Tenax® TA), the tubes are conditioned for approximately 8 h at 280 °C followed by approximately 30 min at 300 °C in an inert gas flow (100 ml/min). The purified sorption tubes are closed and stored at room temperature and in the dark in a container that prevents sample contamination.

Analyse a representative number of conditioned tubes for blank value, using routine analytical parameters, to ensure that thermal desorption blank is sufficiently small (see ISO 16000-6:2021, Clause 9).

Sampling should take place as soon as possible after conditioning. If sampling is not possible within approximately 14 d after conditioning, then the tube shall be reconditioned for 15 min at approximately 300 °C before sampling. Cotton gloves can be used to minimize the risk of contamination of the sorbent tubes. In addition, labelling shall be omitted.

The thermal desorption device should ensure that any contamination from external tube surfaces is excluded from the analytical sample flow path.

Tubes should be individually identifiable via etched barcodes. No adhesive labels or writing on the tube is allowed.

5.2.3 Sampling

Prior to sampling, the conditioned tubes are spiked with a maximum of 1 µl of internal standard solution in methanol (e.g. 20 ng/µl for a sampling volume of 50 l; the absolute mass of the additionally spiked standard depends on the sampling volume and the operating range of the method). The standard solution is usually applied on the sampling end of the sorbent tube.

The sampling equipment is assembled according to Figure 1. The sampling equipment shall be free of leaks. The pump is connected to the non-sampling end of the sorbent tube by means of polyethylene or PTFE connectors and is switched on. If the breakthrough volume of the analysed phthalates is unknown, then two sorption tubes shall be connected in series. The tubes shall be connected with a phthalate-free coupling.

© ISO 2024 – All rights reserved

Documents
Document Sharing Hub
Full document details: BS ISO 16000-33:2024

The volume flow, as well as the temperature, the absolute air pressure and the relative air humidity, shall be recorded. The suitable sampling volume flows are within the range of 50 ml/min to 200 ml/min. This corresponds to a recommended sampling volume of approximately 20 l to 70 l for a sampling duration of approximately 2 h to 24 h. After sampling, the sorption tube is removed from the sampling equipment; both ends of the sorption tube shall be closed.

A duplicate sampling of the indoor air is recommended.

Sampled tubes shall be transported to the laboratory and analysed as soon as possible.

5.3 Sampling by adsorption and subsequent solvent extraction

5.3.1 Apparatus, operating materials and chemicals

5.3.1.1 Sampling system, in accordance with Figure 1.

5.3.1.2 Pump, suitable for a volume of approximately 2 l/min under the conditions of the sampling, recommended sampling volume of approximately 1 m^3 to 3 m^3 in 8 h to 24 h.

5.3.1.3 Gas volume meter, the maximal measurement inaccuracy shall not exceed 5 %.

5.3.1.4 Muffle furnace.

5.3.1.5 Flat, heat resistant evaporating dish, for heating Florisil®.

5.3.1.6 Florisil®, 60 to 100 mesh.

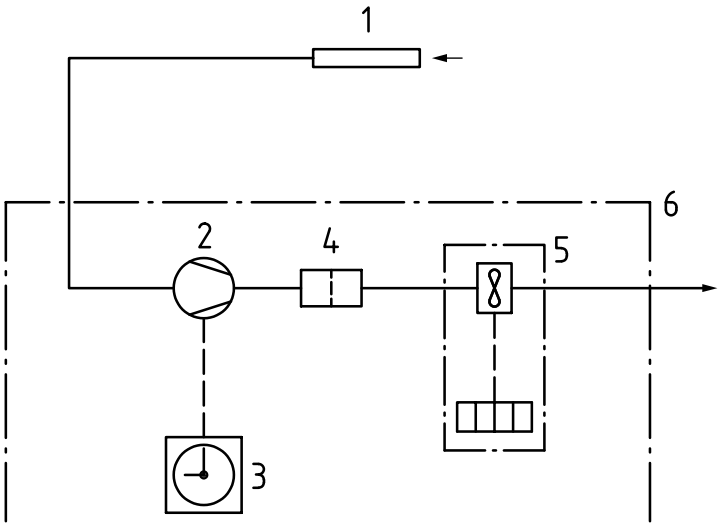

Key

1 sampling tube
2 membrane vacuum pump
3 timer switch (optional)
4 anti-abrasion filter
5 volume measuring device or mass flow controller
6 protective housing

Figure 1 — Schematic diagram of the sampling equipment

5.3.1.7 Glass wool, silanized.

5.3.1.8 Glass flask, with screw-cap and PTFE sealing, 50 ml.

© ISO 2024 – All rights reserved

Documents
Document Sharing Hub
Full document details: BS ISO 16000-33:2024

5.3.1.9 Adsorption tubes, glass tube, approximately 200 ml long, internal diameter approximately 10 mm to 12 mm.

5.3.1.10 Laboratory sampling facilities, hygrometer, thermometer, barometer.

5.3.1.11 Solvent, e.g. TBME or toluene, free of blank values (the solvent shall be tested for the absence of phthalate blank values).

5.3.1.12 Internal standards. Suitable examples include the ring-deuterated compounds D_4-DMP, D_4-DEP, D_4-DBP, D_4-BBP, D_4-DEHP, D_4-DOP as well as the non-deuterated DAIP; see Clause 6 and Table 3.

5.3.1.13 GC-MS, gas chromatographic system fitted with a mass spectrometric detector.

5.3.2 Preparation of Florisil® and the adsorption tubes

Florisil® is brought out in a thin layer (approximately 3 cm to 4 cm) on an evaporation dish and heated at 800 °C for 6 h. After cooling down in the desiccator it is deactivated with bi-distilled water (3 % proportion by mass). To this end, 5 g of Florisil® and 150 µl of water are added to a 50 ml glass flask with a screw-cap and PTFE sealing. After closing the flask, Florisil® shall be mixed for approximately 45 min until a uniformly flowing powder has formed again. The deactivated Florisil® is then filled into an adsorption tube (see Figure 2). The filling height should be approximately 10 cm to 13 cm. The ends of the Florisil® filling are closed with silanised glass wool. The filled tubes are stored in the desiccator over silica gel until air sampling.

NOTE The geometry of the tube is based on the method described in Reference [4].

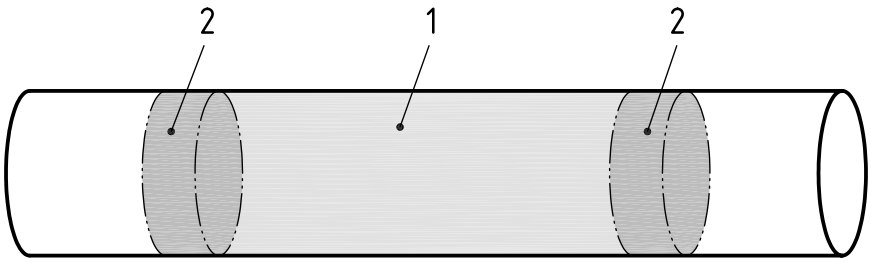

Key

1 Florisil®

2 glass wool

Figure 2 — Filling of the glass tube

5.3.3 Suggestions regarding the application of Florisil®

Each batch of Florisil® newly heated and deactivated in accordance with 5.3.2 shall be examined for blank values. Batches where high phthalate blank values are still measured after such treatment shall be heated and deactivated anew.

As long as the prepared tubes are stored in the desiccator, they are suitable for storage and use within six months. After expiration of this period, unused tubes shall be emptied and the Florisil® shall be treated again in accordance with 5.3.2.

Other adsorbents such as Chromosorb 106®[3)] or comparable carrier materials can be utilized as adsorption agents. Absorbent preparation and sampling shall then be modified accordingly, and the suitability shall be proven by a determination of the performance characteristics.

3) Chromosorb 106® is the trade name of a product supplied by SKC Ltd. This information is given for the convenience of users of this document and does not constitute an endorsement by ISO of the product named. Equivalent products may be used if they can be shown to lead to the same results.

© ISO 2024 – All rights reserved

Documents
Document Sharing Hub
Full document details: BS ISO 16000-33:2024

5.3.4 Sampling

A known volume (e.g. 10 µl) of the internal standard solution (e.g. 100 mg/l which corresponds to an absolute mass of the internal standard of 1 µg) shall be added prior to sampling. The preparation of the solutions of the internal standards is described in Annex E for thermal desorption method and in Annex F for solvent extraction method using Florisil®.

The internal standard is added, for example, by means of a microlitre syringe. The standard solution is usually placed on the adsorbent on the side oriented towards the flow. The amount to be added for the anticipated operating ranges from 0,05 µg/m^3 to 10 µg/m^3 is listed in Table 1. The compounds listed in Clause 6 are suitable as internal standards.

The sampling equipment is assembled according to Figure 1 and a leak test is performed. The volume flow, as well as the temperature, the absolute air pressure and the relative air humidity, shall be recorded. Sampling takes place by means of a pump, and the sampling volume amounts to 1 m^3 to 3 m^3. For a volume flow of 2 l/min to 3 l/min, the sampling duration shall be approximately 8 h to 24 h depending on the sampling strategy.

The loaded tubes shall be transported to the laboratory promptly, and processing of the tubes shall take place as soon as possible after sampling.

Table 1 — Operating range to determine the phthalates with contents from 0,05 µg/m^3 to 10 µg/m^3 in an air sample

Concentration of the reduced sampling solution mg/l	**Corresponds to a concentration in the air** µg/m^3
0,05	0,05
0,1	0,1
0,5	0,5
1,0	1,0
2,5	2,5
5,0	5,0
10,0	10,0
The data concerning the calculated concentrations in the air are tentative. The actual detection and quantification limits of the method shall be determined by the test laboratory based on the calibration under consideration of the blank value. NOTE The data given in Table 1 are valid for an air volume of 1 m^3 and sample processing as described in 5.3.5.	

5.3.5 Sample conditioning

The Florisil® and the glass wool from the adsorption tube are transferred completely to a 50 ml glass flask with screw and mixed with 25 ml solvent. The flask is closed by a screw-cap with a PTFE-coated seal, effectually shacked up for thorough wetting and placed for 15 min in the ultrasonic bath.

TBME and toluene have been proven successful as solvents. The use of another slightly polar solvent is possible. Non-polar solvents (e.g. hexane) are not suitable. However, it shall be guaranteed that the same solvent is used for calibration and gas chromatographic determination of the sampling solution.

Five millilitres of the supernatant are then extracted by a pipette and reduced to 0,2 ml by evaporation. Reduction to dryness leads to considerable substance loss, especially of the volatile phthalates. A 100 µl of this concentrated extract is transferred to the auto sampler vials and used for the GC-MS analysis (see Clause 7). Under application of the specifications described in 5.3.4, the concentration of the internal standard in the concentrated extract amounts to 1 mg/l.

© ISO 2024 – All rights reserved

Documents
Document Sharing Hub
Full document details: BS ISO 16000-33:2024

6 Calibration

6.1 General

Phthalates present in indoor environments tend to undergo gas-particle-partitioning which is mainly characterized by the vapour pressure of the individual compound. Phthalates exhibiting high vapour pressures are most likely found in the gas phase whereas phthalates with low pressures tend to condense and are predominantly found in the particle phase. Therefore, some phthalates like DPhP, DiNP, DiDP and DiUP are not normally present at detectable concentrations in indoor air. Those compounds will be found in solvent wipe samples and house dust samples. Methods for screening phthalates in solvent wipe tests and house dust are described in Annex C and Annex D, respectively. Table 2 gives an overview for a range of phthalates and their occurrence in air samples or house dust as well as in wipe samples.

Table 2 — Ascertainable phthalates in various media

Compound	Air sample	House dust	Wipe sample
DMP	X	X	X
DEP	X	X	X
DPP	X	X	X
DiBP	X	X	X
DBP	X	X	X
BBP	X	X	X
DCHP	X	X	X
DEHP	X	X	X
DOP	X	X	X
DPhP		X	X
DiNP		X	X
DiDP		X	X
DiUP		X	X

A calibration shall be performed in order to specify the concentration and working range to be determined, respectively. A multiple calibration (at least a five-point calibration) is required for the establishment of the basic calibration. It shall be repeated regularly, at the latest after substantial changes of the measurement system. A multiple calibration (at least a three-point calibration) shall be performed for the validation of the calibration function. The ring-deuterated compounds listed in 5.2.2 as well as the non-deuterated DAIP are suitable as internal standards (see ISO 18856).

6.2 Calibration of the thermal desorption method

A minimum five-point thermal desorption GC-MS calibration shall be performed by desorbing a blank tube and preparing standard tubes at four or more different levels covering the work range. Methanol is used as solvent. A detailed example for a calibration procedure is given in Annex E.

6.3 Calibration of the solvent extraction method

A minimum five-point solvent extraction GC-MS calibration shall be performed by desorbing a blank tube and preparing standard tubes at four or more different levels covering the work range. More calibration points can be added if an extended calibration range is required. Either toluene or TBME is used as solvent. A detailed example for a calibration procedure is given in Annex F.

© ISO 2024 – All rights reserved

Documents
Document Sharing Hub
Full document details: BS ISO 16000-33:2024

7 Identification and quantification

7.1 Mass spectrometric analysis

During phthalate breakup through electron ionization, the anhydride fragment with a mass to charge ratio (m/z) of 149 forms the base peak. The masses usually used in SIM mode are listed in Table 3.

Specific problems arise during quantification of the isomer mixtures, e.g. nonyl, decyl and undecyl phthalates. Since isomeric phthalates fragment stronger than their *n*-compounds, the determination of phthalates using the ion m/z = 149 and the response factor of the corresponding *n*-compound leads to a result that lies lower than the actual value. Thus, for example, DEHP and DiBP show an approximately 20 % lower detection sensitivity towards their *n*-compounds upon quantification by means of m/z = 149. The lower results for components with longer chains can amount to 50 %.

Table 3 — Mass traces (SIM masses)

Compound	Quantification mass	Qualification mass
DMP	163	194
DEP	149	177
DPP	149	191,209
DiBP	149	167,223
DBP	149	205,223
BBP	149	91,206
DCHP	149	167,249
DEHP	149	167,279
DOP	149	167,279
DPhP	225	77,226
DiNP	293	149,167
DiDP	307	149
DiUP	321	149
D_4-DMP[a]	167	198
D_4-DEP[a]	153	181
D_4-DBP[a]	153	209,227
D_4-BBP[a]	153	95,212 0
D_4-DEHP[a]	153	171,283
D_4-DOP[a]	153	171,283
DAIP[b]	149	104,189

[a] These compounds are ring-deuterated phthalate internal standards.

[b] This compound is an internal standard.

When DAIP is used as an internal standard, it is necessary to confirm that the retention times of DAIP and 4-NP are not identical.

In addition, numerous peaks in the chromatogram are obtained in the case of the isomeric nonyl, decyl and undecyl phthalates (especially in house dust samples or solvent wipe samples)[5],[6],[7] (see Figure 3). Thus, for the same concentration, the height and the area of the individual peaks within a peak pattern of this type are smaller than for the phthalates consisting of only one isomer, e.g. DEHP. Smaller concentrations of the isomeric nonyl and decyl phthalates can present difficulties with conforming identities compared with the same concentrations of phthalates consisting of a single isomer. Hence, the achievable quantification limits for isomer mixtures are higher than for the common phthalates.

© ISO 2024 – All rights reserved

Documents
Document Sharing Hub
Full document details: BS ISO 16000-33:2024