BS ISO 16254:2016

BSI Standards Publication

Acoustics — Measurement of sound emitted by road vehicles of category M and N at standstill and low speed operation — Engineering method

Documents
Document Sharing Hub

Full document details: BS ISO 16254:2016

National foreword

This British Standard is the UK implementation of ISO 16254:2016.

The UK participation in its preparation was entrusted to Technical Committee EH/1/2, Transport noise.

A list of organizations represented on this committee can be obtained on request to its secretary.

This publication does not purport to include all the necessary provisions of a contract. Users are responsible for its correct application.

© The British Standards Institution 2016. Published by BSI Standards Limited 2016

ISBN 978 0 580 79649 4

ICS 17.140.30

Compliance with a British Standard cannot confer immunity from legal obligations.

This British Standard was published under the authority of the Standards Policy and Strategy Committee on 31 May 2016.

Amendments issued since publication

Date	Text affected

Documents
Document Sharing Hub

Full document details: BS ISO 16254:2016

INTERNATIONAL STANDARD

ISO 16254

First edition
2016-05-01

Acoustics — Measurement of sound emitted by road vehicles of category M and N at standstill and low speed operation — Engineering method

Acoustique — Mesurage du bruit émis par les véhicules routiers de catégories M et N à l'arrêt et en fonctionnement à basse vitesse — Méthode d'expertise

Reference number
ISO 16254:2016(E)

Documents
Document Sharing Hub
© ISO 2016

COPYRIGHT PROTECTED DOCUMENT

© ISO 2016, Published in Switzerland

All rights reserved. Unless otherwise specified, no part of this publication may be reproduced or utilized otherwise in any form or by any means, electronic or mechanical, including photocopying, or posting on the internet or an intranet, without prior written permission. Permission can be requested from either ISO at the address below or ISO's member body in the country of the requester.

ISO copyright office
Ch. de Blandonnet 8 • CP 401
CH-1214 Vernier, Geneva, Switzerland
Tel. +41 22 749 01 11
Fax +41 22 749 09 47
copyright@iso.org
www.iso.org

© ISO 2016 – All rights reserved

Documents
Document Sharing Hub

Full document details: BS ISO 16254:2016

Contents

Page

Foreword ... **v**
Introduction ... **vi**
1 Scope ... **1**
2 Normative references ... **1**
3 Terms and definitions ... **2**
4 Symbols and abbreviated terms ... **3**
5 Instrumentation ... **4**
5.1 Instruments for acoustic measurement ... 4
5.1.1 General ... 4
5.1.2 Calibration ... 5
5.1.3 Compliance with requirements ... 5
5.2 Instrumentation for speed measurements ... 5
5.3 Meteorological instrumentation ... 5
6 Acoustic environment, meteorological conditions, and background noise ... **6**
6.1 Test site ... 6
6.1.1 General ... 6
6.1.2 Outdoor testing ... 6
6.1.3 Indoor hemi anechoic or anechoic testing ... 7
6.1.4 Indoor external sound generation system testing ... 9
6.2 Meteorological conditions ... 9
6.2.1 General ... 9
6.2.2 Outdoor measurements ... 9
6.2.3 Indoor measurements ... 9
6.3 Background noise ... 9
6.3.1 Measurement criteria for A-weighted sound pressure level ... 9
6.3.2 Vehicle A-weighted sound pressure level measurement correction criteria ... 10
6.3.3 Background noise requirements when analysing in one-third-octave bands ... 11
6.3.4 Measurement background noise when testing a component ... 12
7 Test procedures ... **12**
7.1 Full vehicle testing ... 12
7.1.1 Microphone positions ... 12
7.1.2 Conditions of the vehicle ... 12
7.1.3 Test mass of vehicle ... 13
7.1.4 Tyre selection and condition ... 13
7.1.5 Operating conditions ... 13
7.1.6 Measurement readings and reported values ... 15
7.1.7 Data compilation ... 16
7.1.8 Standstill results ... 16
7.1.9 Slow speed cruise result at 10 km/h ... 16
7.1.10 Reported value ... 16
7.2 Measurement of sound to determine frequency shift ... 16
7.2.1 General ... 16
7.2.2 Instrumentation ... 17
7.2.3 Signal processing requirements ... 17
7.2.4 Test facilities ... 17
7.2.5 Frequency shift measurement test procedure ... 17
7.3 Measurement uncertainty ... 20
8 Test report ... **21**
Annex A (informative) **Information on development of ISO 16254** ... **22**
Annex B (informative) **Development of frequency shift information** ... **24**

AVA Documents
Document Sharing Hub

© ISO 2016 – All rights reserved

Full document details: BS ISO 16254:2016

Annex C (informative) **Relevance of objective acoustic data to pedestrian safety** 26
Annex D (informative) **Measurement uncertainty — Framework for analysis according to ISO/IEC Guide 98-3 (GUM)** 28
Annex E (normative) **Testing requirements for reduced uncertainty** 34
Annex F (informative) **Frequency identification of tones using the fast Fourier transformation** 35
Annex G (informative) **Flowchart of the procedure for measurement and reporting of background noise** 37
Annex H (informative) **Flowchart for the procedure to correct A-weighted sound pressure levels** 38
Annex I (informative) **Flowchart for the procedure to report A-weighted one-third-octave-band sound pressure levels** 39
Bibliography 40

© ISO 2016 – All rights reserved
Documents
Document Sharing Hub
Full document details: BS ISO 16254:2016

Foreword

ISO (the International Organization for Standardization) is a worldwide federation of national standards bodies (ISO member bodies). The work of preparing International Standards is normally carried out through ISO technical committees. Each member body interested in a subject for which a technical committee has been established has the right to be represented on that committee. International organizations, governmental and non-governmental, in liaison with ISO, also take part in the work. ISO collaborates closely with the International Electrotechnical Commission (IEC) on all matters of electrotechnical standardization.

The procedures used to develop this document and those intended for its further maintenance are described in the ISO/IEC Directives, Part 1. In particular the different approval criteria needed for the different types of ISO documents should be noted. This document was drafted in accordance with the editorial rules of the ISO/IEC Directives, Part 2 (see www.iso.org/directives).

Attention is drawn to the possibility that some of the elements of this document may be the subject of patent rights. ISO shall not be held responsible for identifying any or all such patent rights. Details of any patent rights identified during the development of the document will be in the Introduction and/or on the ISO list of patent declarations received (see www.iso.org/patents).

Any trade name used in this document is information given for the convenience of users and does not constitute an endorsement.

For an explanation on the meaning of ISO specific terms and expressions related to conformity assessment, as well as information about ISO's adherence to the WTO principles in the Technical Barriers to Trade (TBT) see the following URL: Foreword - Supplementary information

The committee responsible for this document is ISO/TC 43, *Acoustics*, Subcommittee SC 1, *Noise*, in collaboration with ISO/TC 22, *Road vehicles*.

© ISO 2016 – All rights reserved

Documents
Document Sharing Hub
Full document details: BS ISO 16254:2016

Introduction

The advent of road transport vehicles that rely, in whole or in part, on alternative drive trains (e.g. electromotive propulsion) are serving to reduce both air and noise pollution and their adverse impacts on citizens throughout the world. However, the environmental benefits achieved to date by these "hybrid or pure electric" road vehicles have resulted in the unintended consequence of removing a source of audible signal that is used by various groups of pedestrians (e.g. in particular, blind and low vision persons) to detect the approach, presence and/or departure of road vehicles.

Therefore, this International Standard has been developed to provide a method to measure the sound emission of road vehicles in standstill and low speed operation, as well as to quantify the characteristics of any external sound-generation system installed for the purpose of conveying acoustic information about the approach, presence and/or departure of the vehicle to nearby pedestrians.

This International Standard was developed in cooperation with the Society of Automotive Engineers (SAE) Vehicle Sound for Pedestrians Subcommittee.

© ISO 2016 – All rights reserved
Documents
Document Sharing Hub
Full document details: BS ISO 16254:2016

INTERNATIONAL STANDARD ISO 16254:2016(E)

Acoustics — Measurement of sound emitted by road vehicles of category M and N at standstill and low speed operation — Engineering method

1 Scope

This International Standard is derived from ISO 362-1 and specifies an engineering method for measuring the sound emitted by M and N category road vehicles at standstill and low speed operating conditions. The specifications reproduce the level of sound which is generated by the principal vehicle sound sources consistent with stationary and low speed vehicle operating conditions relevant for pedestrian safety. The method is designed to meet the requirements of simplicity as far as they are consistent with reproducibility of results under the operating conditions of the vehicle.

The test method requires an acoustic environment which is only obtained in an extensive open space. Such conditions usually exist during the following:

— measurements of vehicles for regulatory certification;

— measurements at the manufacturing stage;

— measurements at official testing stations.

The results obtained by this method give an objective measure of the sound emitted under the specified conditions of test. It is necessary to consider the fact that the subjective appraisal of the annoyance, perceptibility, and/or detectability of different motor vehicles or classes of motor vehicles due to their sound emission are not simply related to the indications of a sound measurement system. As annoyance, perceptibility and/or detectability are strongly related to personal human perception, physiological human condition, culture, and environmental conditions, there are large variations and therefore these terms are not useful as parameters to describe a specific vehicle condition.

Spot checks of vehicles chosen at random rarely occur in an ideal acoustic environment. If measurements are carried out on the road in an acoustic environment which does not fulfil the requirements stated in this International Standard, the results obtained might deviate appreciably from the results obtained using the specified conditions.

In addition, this International Standard provides an engineering method to measure the performance of external sound generation systems intended for the purpose of providing acoustic information to pedestrians on a vehicle's operating condition. This information is reported as objective criteria related to the external sound generation system's sound pressure level, frequency content, and changes in sound pressure level and frequency content as a function of vehicle speed. As such, these measures can provide pedestrians with information on the location, speed, acceleration, and deceleration behaviour of a vehicle. Annex A contains background information relevant in the development of this International Standard.

2 Normative references

The following documents, in whole or in part, are normatively referenced in this document and are indispensable for its application. For dated references, only the edition cited applies. For undated references, the latest edition of the referenced document (including any amendments) applies.

ISO 362–1, *Measurement of noise emitted by accelerating road vehicles — Engineering method — Part 1: M and N categories*

© ISO 2016 – All rights reserved

Documents
Document Sharing Hub
Full document details: BS ISO 16254:2016

ISO 10844, *Acoustics — Specification of test tracks for measuring noise emitted by road vehicles and their tyres*

ISO 26101, *Acoustics — Test methods for the qualification of free-field environments*

IEC 60942, *Electroacoustics — Sound calibrators*

IEC 61260–1, *Electroacoustics — Octave-band and fractional-octave-band filters — Part 1: Specifications*

IEC 61672–1, *Electroacoustics — Sound level meters — Part 1: Specifications*

SAE J2889–1, *Measurement of Minimum Noise Emitted by Road Vehicles*

ISO/IEC Guide 98–3, *Uncertainty of measurement — Part 3: Guide to the expression of uncertainty in measurement (GUM:1995)*

3 Terms and definitions

For the purposes of this document, the terms and definitions given in ISO 362–1 and SAE J2889–1 and the following apply.

3.1
front reference plane
vertical plane tangent to the leading edge of the vehicle

3.2
rear reference plane
vertical plane tangent to the trailing edge of the vehicle

3.3
external sound generation system
system that provides an acoustic signal to the external environment of the vehicle for the purpose to provide information to pedestrians

3.4
component
external sound generation system (3.3) intended to emit sound information which can be tested separately from the vehicle

3.5
kerb mass
complete shipping mass of a vehicle fitted with all equipment necessary for normal operation plus the mass of the following elements for M1, N1 and M2 having a maximum authorized mass not exceeding 3 500 kg:

— lubricants, coolant (if needed), washer fluid;

— fuel (tank filled to at least 90 % of the capacity specified by the manufacturer);

— other equipment if included as basic parts for the vehicle, such as spare wheel(s), wheel chocks, fire extinguisher(s), spare parts and tool kit

Note 1 to entry: The definition of kerb mass can vary from country to country, but in this International Standard it refers to the definition contained in ISO 1176.

Note 2 to entry: M and N vehicle categories are defined in SAE J2889–1 and ISO 362-1.

3.6
mass in running order
nominal mass of an N2, N3 or M2 vehicle having a maximum authorized mass greater than 3 500 kg, or an M3 vehicle as determined by the following conditions:

© ISO 2016 – All rights reserved
Documents
Document Sharing Hub
Full document details: BS ISO 16254:2016

a) the mass in running order is taken as the sum of the unladen vehicle mass and the driver's mass;

b) in the case of category M2 and M3 vehicles that include seating positions for additional crewmembers, their mass is incorporated in the same way and equal to that of the driver

Note 1 to entry: The driver's mass is calculated in accordance with ISO 2416.

Note 2 to entry: Unladen vehicle mass is defined in ISO 362-1.

3.7
full vehicle operation
operation of a vehicle with all systems and components operating according to the manufacturer's specification for normal road use

3.8
simulated vehicle operation
operation of a vehicle with some systems or components disabled to reduce noise interference during testing which may include external signals applied to the vehicle to simulate actual in-use signals

3.9
lowest frequency of interest
frequency below which there is no signal content relevant to the measurement of sound emission for the vehicle under test

4 Symbols and abbreviated terms

Table 1 — Symbols and abbreviated terms and the paragraph in which they are first used

Symbol	Unit	Subclause	Explanation
AA′	—	7.1.5.1	Line perpendicular to vehicle travel which indicates the beginning of the zone to record sound pressure level during test.
BB′	—	7.1.5.1	Line perpendicular to vehicle travel which indicates end of the zone to record sound pressure level during test.
δ_1 - δ_7	dB	D.2	Input quantities to allow for any uncertainty in A-weighted sound pressure level.
δ_8 - δ_{14}	dB	D.3	Input quantities to allow for any uncertainty in one-third-octave-band A-weighted sound pressure level.
δ_{15} - δ_{21}	Hz	D.4	Input quantities to allow for any uncertainty in frequency measurement used for the determination of frequency shift.
CC′	—	6.1.3	Centreline of vehicle travel.
$f_{i,\mathrm{speed}}$	Hz	7.2.5.2	Single frequency component of external sound generation system at a given vehicle speed.
$f_{i,\mathrm{ref}}$	Hz	7.2.5.2	Single frequency component of external sound generation system at reference vehicle speed.
del_f	%	7.2.5.2	Frequency shift expressed in percent of a reference frequency.
Δf	Hz	7.2.3	Frequency resolution of narrowband analysis used to measure frequency spectra for the purpose of determining frequency shift information.
F_s	Hz	5.1.1	Sampling frequency used by digital signal processing system
j	—	6.3.2	Index for single test run within stopped or slow speed cruise test conditions
l_{vehicle}	m	6.1.3	Vehicle length used for determination of minimal space necessary to fulfil hemi-anechoic space requirements.
$L_{\mathrm{st,fwd}}$	dB	7.1.8	Vehicle A-weighted sound pressure level in stationary forward condition.

© ISO 2016 – All rights reserved

Documents
Document Sharing Hub
Full document details: BS ISO 16254:2016

Table 1 *(continued)*

Symbol	Unit	Subclause	Explanation
$L_{st,rev}$	dB	7.1.8	Vehicle A-weighted sound pressure level in stationary reverse condition.
$L_{crs,10}$	dB	7.1.9	Cruise vehicle A-weighted sound pressure level at a vehicle speed of 10 km/h.
L_{corr}	dB	6.3.2	Background noise correction.
$L_{test,j}$	dB	6.3.2	A-weighted sound pressure level result of jth test run.
$L_{testcorr,j}$	dB	6.3.2	A-weighted sound pressure level result of jth test run corrected for background noise.
L_{bgn}	dB	6.3.1	Background noise A-weighted sound pressure level.
$\Delta L_{bgn,p\text{-}p}$	dB	6.3.1	Range of maximum to minimum value of the representative background noise A-weighted sound pressure level over a defined time period.
L_x	dB	D.2	A-weighted sound pressure level for any stationary or cruise condition for use in assessment of measurement uncertainty.
$L_{x,band}$	dB	D.3	A-weighted sound pressure level per one-third-octave band for any stationary or cruise condition for use in assessment of measurement uncertainty.
$L_{x,meas}$	dB	D.2	A-weighted sound pressure level for any stationary or cruise condition for use in assessment of measurement uncertainty.
ΔL	dB	6.3.2	A-weighted sound pressure level of jth test result minus the A-weighted background noise level ($\Delta L = L_{test,j} - L_{bgn}$).
N	—	7.2.3	Block size of digital sample used for discrete Fourier transform or autopower spectrum analysis.
PP′	—	7.1.1	Line perpendicular to vehicle travel which indicates location of microphones.
$v_{AA'}$	km/h	5.2	Vehicle velocity when vehicle front reference plane in forward motion passes line AA′. See 3.1 for definition of front reference plane.
$v_{BB'}$	km/h	5.2	Vehicle velocity when vehicle front reference plane or rear of vehicle in forward motion passes line BB′. See 3.1 for definition of front reference plane.
$v_{PP'}$	km/h	5.2	Vehicle velocity when vehicle front reference plane in forward motion passes line PP′. See 3.1 for definition of front reference plane.
v_{ref}	km/h	7.2.5.2	Reference vehicle velocity used for calculating frequency shift percentage.
v_{test}	km/h	7.1.5.2	Target vehicle test velocity.

5 Instrumentation

5.1 Instruments for acoustic measurement

5.1.1 General

The apparatus used for measuring the sound pressure level shall be a sound level meter or equivalent measurement system meeting the requirements of class 1 instruments (inclusive of the recommended windscreen, if used). These requirements are described in IEC 61672–1.

The entire measurement system shall be checked by means of a sound calibrator that fulfils the requirements of class 1 sound calibrators in accordance with IEC 60942.

© ISO 2016 – All rights reserved
Documents
Document Sharing Hub
Full document details: BS ISO 16254:2016

Measurements shall be carried out using the time weighting "F" of the acoustic measurement instrument and the "A" frequency weighting also described in IEC 61672–1. When using a system that includes a periodic monitoring of the A-weighted sound pressure level, a reading should be made at a time interval not greater than 30 ms.

When measurements are carried out for one-third octaves, the instrumentation shall meet all requirements of IEC 61260–1, class 1.

When measurements are carried out for frequency shift, the digital sound recording system shall have at least a 16 bit quantization. The sampling rate, F_S, and the dynamic range shall be appropriate to the signal of interest.

The instruments shall be maintained and calibrated in accordance to the instructions of the instrument manufacturer.

5.1.2 Calibration

At the beginning and at the end of every measurement session, the entire acoustic measurement system shall be checked by means of a sound calibrator as described in 5.1.1. Without any further adjustment, the difference between the readings shall be less than or equal to 0,5 dB. If this value is exceeded, the results of the measurements obtained after the previous satisfactory check shall be discarded.

5.1.3 Compliance with requirements

Compliance of the sound calibrator with the requirements of IEC 60942 shall be verified once a year. Compliance of the instrumentation system with the requirements of IEC 61672–1 shall be verified at least every 2 years. All compliance testing shall be conducted by a laboratory which is authorized to perform calibrations traceable to the appropriate standards.

5.2 Instrumentation for speed measurements

The road speed of the vehicle shall be measured with instruments meeting specification limits of at least ±0,5 km/h when using continuous measuring devices.

If testing uses independent measurements of speed, this instrumentation shall meet specification limits of at least ±0,2 km/h.

NOTE Independent measurements of speed are when two or more separate devices will determine the $v_{AA'}$, $v_{BB'}$ and $v_{PP'}$ values. A continuous measuring device will determine all required speed information with one device.

5.3 Meteorological instrumentation

The meteorological instrumentation used to monitor the environmental conditions during the test shall meet the specifications of the following:

— ±1 °C or less for a temperature measuring device;

— ±1,0 m/s for a wind speed-measuring device;

— ±5 hPa for a barometric pressure measuring device;

— ±5 % for a relative humidity measuring device.

© ISO 2016 – All rights reserved

Documents
Document Sharing Hub
Full document details: BS ISO 16254:2016

6 Acoustic environment, meteorological conditions, and background noise

6.1 Test site

6.1.1 General

The specifications for the test site provide the necessary acoustic environment to carry out the full vehicle or component tests documented in this International Standard. Outdoor and indoor test environments that meet the specifications of this International Standard provide equivalent acoustic environments and produce results that are equally valid.

6.1.2 Outdoor testing

The test site shall be substantially level. The test track construction and surface shall meet the requirements of ISO 10844. Figure 1 gives information on test site dimensions.

Within a radius of 50 m around the centre of the track, the space shall be free of large reflecting objects, such as fences, rocks, bridges or buildings. The test track and the surface of the site shall be dry and free from absorbing materials, such as powdery snow or loose debris.

In the vicinity of the microphones, there shall be no obstacle that could influence the acoustic field and no person shall remain between the microphone and the noise source. The meter observer shall be positioned so as not to influence the meter reading.

NOTE 1 Buildings outside the 50 m radius might have significant influence if their reflection focuses on the test track.

The term “substantially level” is intended to convey that the test site shall not have slopes or discontinuities that would render invalid the assumption the site provided free-field acoustic propagation. This is not to limit slopes on the test site necessary for water management, drainage, etc. Engineering judgement is expected to be applied to determine the effect on the site of any obstacle. The test track itself is subject to the requirements specified.

For the purpose of this International Standard, test track constructions and surfaces according to either ISO 10844:2011 or ISO 10844:1994 will also provide satisfactory results for vehicle speeds of up to 20 km/h.

NOTE 2 Government regulations can require specific surface requirements.

© ISO 2016 – All rights reserved
Documents
Document Sharing Hub
Full document details: BS ISO 16254:2016

Dimensions in metres

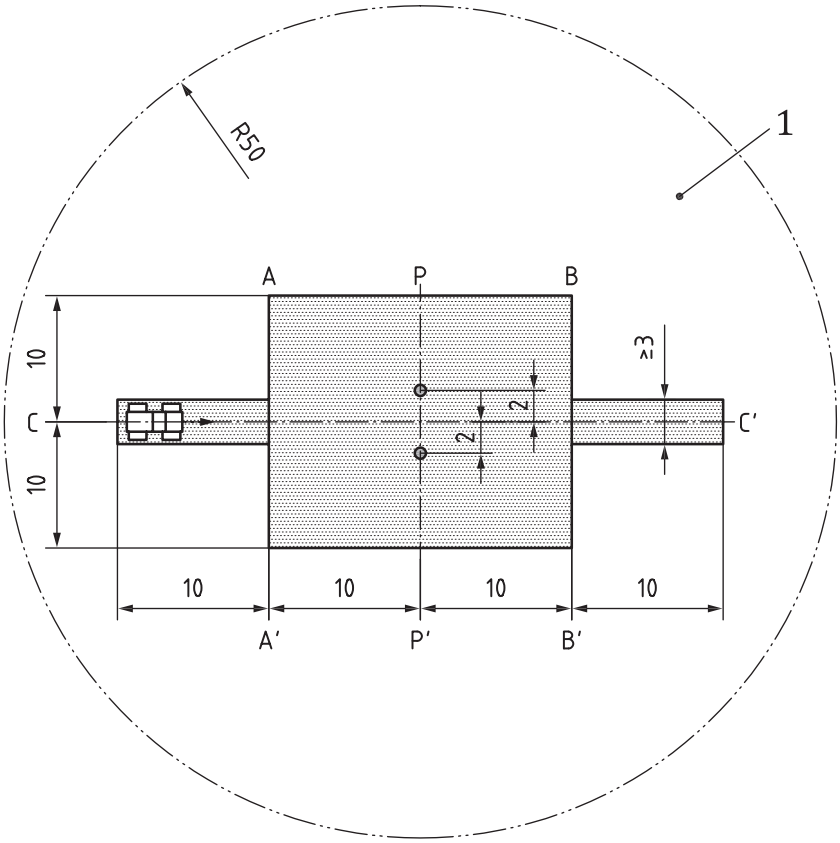

Key

1 area free of reflecting objects

○ microphone (height 1,2 m)

NOTE The shaded area is the minimum area to be covered with a surface complying with ISO 10844.

Figure 1 — Test site dimensions

6.1.3 Indoor hemi anechoic or anechoic testing

This subclause specifies conditions applicable when testing a full vehicle, either operating as it would on the road with all systems operational or operating in a mode where only the external sound generation system is operational.

The test facility shall meet requirements of ISO 26101 with the following qualification criteria and measurement requirements appropriate to this test method.

Space to be deemed hemi-anechoic shall be defined as shown in Figure 2. Points D, E, F and G are locations used for the microphones in conducting testing according to the method described in Clause 7.

© ISO 2016 – All rights reserved

Documents
Document Sharing Hub
Full document details: BS ISO 16254:2016

Dimensions in metres

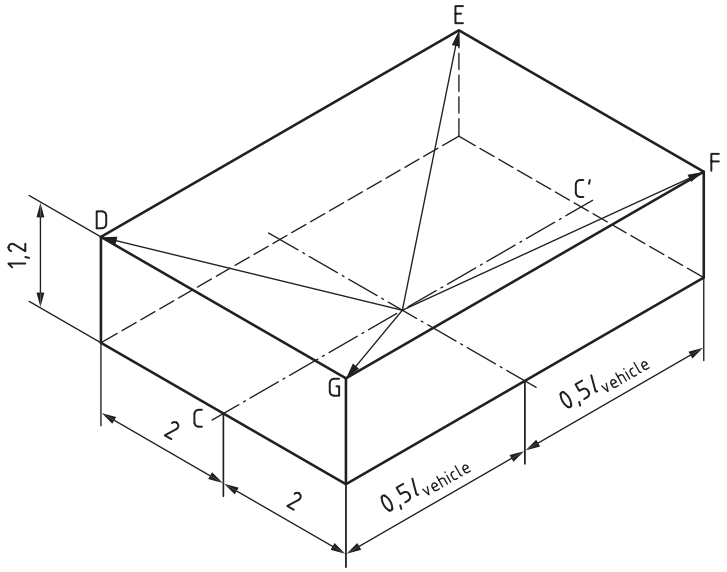

Key

CC' centreline of vehicle travel

D, E, F, G microphone positions

Figure 2 — Spatial dimensions for acoustic space defined to be hemi-anechoic

For qualifying the hemi acoustic space, the following evaluation shall be conducted:

— sound source location shall be placed on the floor in middle of the space deemed to be anechoic;

— sound source shall provide a broadband input for measurement;

— evaluation shall be conducted in one-third-octave bands;

— microphone locations for evaluation shall be on a line from the source location to each position of microphones used for measurement in the International Standard shown by points D, E, F, and G in Figure 2. This is commonly referred at the microphone transverse;

— the maximum spacing of the measurement points for evaluation on the microphone transverse line shall depend on the size of the space deemed hemi-anechoic. A minimum of 10 points shall be used;

— the one-third-octave bands used to establish hemi-anechoic qualification shall be defined to cover the spectral range of interest.

The test facility shall have a cut-off frequency, as defined in ISO 26101, lower than the lowest frequency of interest.

In the vicinity of the microphones, there shall be no obstacle that could influence the acoustic field and no person shall remain between the microphone and the noise source. The meter observer shall be positioned so as not to influence the meter reading. Microphones shall be located as specified in Figure 1.

NOTE It is expected that users of this International Standard will understand that valid measurements can only be made when the cut-off frequency is lower than the lowest frequency of interest. A specific numerical requirement for cut-off frequency is not given due to the range of variation of appropriate cut-off frequencies depending upon the measured vehicle.

In the absence of any information on the range of frequencies to be measured for hemi-anechoic qualification, it is recommended to use the frequency range from 100 Hz to 10 000 Hz.

© ISO 2016 – All rights reserved
Documents
Document Sharing Hub
Full document details: BS ISO 16254:2016