BS ISO 16254:2024

BSI Standards Publication

Acoustics — Measurement of sound emitted by road vehicles of category M and N at standstill and low speed operation — Engineering method

Documents
Document Sharing Hub

Full document details: BS ISO 16254:2024

National foreword

This British Standard is the UK implementation of ISO 16254:2024. It supersedes BS ISO 16254:2016, which is withdrawn.

The UK participation in its preparation was entrusted to Technical Committee EH/1/2, Transport noise.

A list of organizations represented on this committee can be obtained on request to its committee manager.

Contractual and legal considerations

This publication has been prepared in good faith, however no representation, warranty, assurance or undertaking (express or implied) is or will be made, and no responsibility or liability is or will be accepted by BSI in relation to the adequacy, accuracy, completeness or reasonableness of this publication. All and any such responsibility and liability is expressly disclaimed to the full extent permitted by the law.

This publication is provided as is, and is to be used at the recipient's own risk.

The recipient is advised to consider seeking professional guidance with respect to its use of this publication.

This publication is not intended to constitute a contract. Users are responsible for its correct application.

© The British Standards Institution 2024
Published by BSI Standards Limited 2024

ISBN 978 0 539 13141 3

ICS 17.140.30

Compliance with a British Standard cannot confer immunity from legal obligations.

This British Standard was published under the authority of the Standards Policy and Strategy Committee on 31 December 2024.

Amendments/corrigenda issued since publication

Date	Text affected

Documents
Document Sharing Hub

Full document details: BS ISO 16254:2024

International Standard

ISO 16254

Second edition
2024-12

Acoustics — Measurement of sound emitted by road vehicles of category M and N at standstill and low speed operation — Engineering method

Acoustique — Mesurage du bruit émis par les véhicules routiers de catégories M et N à l'arrêt et en fonctionnement à basse vitesse — Méthode d'expertise

Reference number
ISO 16254:2024(en)

© ISO 2024

Documents
Document Sharing Hub

Full document details: BS ISO 16254:2024

COPYRIGHT PROTECTED DOCUMENT

© ISO 2024

All rights reserved. Unless otherwise specified, or required in the context of its implementation, no part of this publication may be reproduced or utilized otherwise in any form or by any means, electronic or mechanical, including photocopying, or posting on the internet or an intranet, without prior written permission. Permission can be requested from either ISO at the address below or ISO's member body in the country of the requester.

ISO copyright office
CP 401 • Ch. de Blandonnet 8
CH-1214 Vernier, Geneva
Phone: +41 22 749 01 11
Email: copyright@iso.org
Website: www.iso.org

Published in Switzerland

Documents
Document Sharing Hub
Full document details: BS ISO 16254:2024

Contents

Page

Foreword ... **v**
Introduction ... **vi**
1 Scope ... **1**
2 Normative references ... **1**
3 Terms and definitions ... **2**
4 Symbols and abbreviated terms ... **3**
5 Instrumentation ... **6**
5.1 Instruments for acoustic measurement ... 6
5.1.1 General ... 6
5.1.2 Daily verification and adjustment ... 7
5.1.3 Conformity with requirements ... 7
5.2 Instrumentation for speed measurements ... 7
5.3 Meteorological instrumentation ... 8
6 Acoustic environment, meteorological conditions, and background noise ... **8**
6.1 Test site ... 8
6.1.1 General ... 8
6.1.2 Outdoor testing ... 8
6.1.3 Indoor hemi anechoic or anechoic testing ... 9
6.1.4 Indoor external sound generation system testing ... 11
6.2 Meteorological conditions ... 11
6.2.1 General ... 11
6.2.2 Outdoor measurements ... 11
6.2.3 Indoor measurements ... 11
6.3 Background noise ... 11
6.3.1 Measurement criteria for A-weighted sound pressure level ... 11
6.3.2 Background noise requirements when analysing in one-third octave bands ... 12
6.3.3 Measurement background noise when testing a component ... 13
7 Test procedures ... **13**
7.1 Full vehicle testing ... 13
7.1.1 Microphone positions ... 13
7.1.2 Conditions of the vehicle ... 13
7.1.3 Test mass of vehicle ... 14
7.1.4 Tyre selection and condition ... 14
7.1.5 Operating conditions ... 14
7.1.6 Measurement readings and reported values ... 16
7.1.7 Data compilation ... 18
7.1.8 Reported standstill results ... 19
7.1.9 Reported slow speed cruise result at 10 km/h ... 20
7.2 Measurement of sound to determine frequency shift ... 20
7.2.1 General ... 20
7.2.2 Instrumentation ... 20
7.2.3 Signal processing requirements ... 20
7.2.4 Test facilities ... 20
7.2.5 Frequency shift measurement test procedure ... 21
7.3 Measurement uncertainty ... 23
8 Test report ... **24**
Annex A (informative) **Information on development of ISO 16254** ... **27**
Annex B (informative) **Development of frequency shift information** ... **29**
Annex C (informative) **Relevance of objective acoustic data to pedestrian safety** ... **31**

© ISO 2024 – All rights reserved

Documents
Document Sharing Hub
Full document details: BS ISO 16254:2024

Annex D (informative) **Measurement uncertainty – Framework for analysis according to ISO/IEC Guide 98-3 (GUM)** 33
Annex E (informative) **Testing requirements for reduced uncertainty** 41
Annex F (informative) **Frequency identification of tones using the fast Fourier transformation** 42
Annex G (informative) **Flowchart of the procedure for measurement and reporting of background noise** 44
Annex H (informative) **Flowchart for the procedure to measure and report A-weighted sound pressure levels** 45
Annex I (informative) **Flowchart for the procedure to report A-weighted one-third octave band sound pressure levels** 47
Annex J (informative) **Tonality** 48
Bibliography 54

© ISO 2024 – All rights reserved

Documents
Document Sharing Hub
Full document details: BS ISO 16254:2024

Foreword

ISO (the International Organization for Standardization) is a worldwide federation of national standards bodies (ISO member bodies). The work of preparing International Standards is normally carried out through ISO technical committees. Each member body interested in a subject for which a technical committee has been established has the right to be represented on that committee. International organizations, governmental and non-governmental, in liaison with ISO, also take part in the work. ISO collaborates closely with the International Electrotechnical Commission (IEC) on all matters of electrotechnical standardization.

The procedures used to develop this document and those intended for its further maintenance are described in the ISO/IEC Directives, Part 1. In particular, the different approval criteria needed for the different types of ISO document should be noted. This document was drafted in accordance with the editorial rules of the ISO/IEC Directives, Part 2 (see www.iso.org/directives).

ISO draws attention to the possibility that the implementation of this document may involve the use of (a) patent(s). ISO takes no position concerning the evidence, validity or applicability of any claimed patent rights in respect thereof. As of the date of publication of this document, ISO had not received notice of (a) patent(s) which may be required to implement this document. However, implementers are cautioned that this may not represent the latest information, which may be obtained from the patent database available at www.iso.org/patents. ISO shall not be held responsible for identifying any or all such patent rights.

Any trade name used in this document is information given for the convenience of users and does not constitute an endorsement.

For an explanation of the voluntary nature of standards, the meaning of ISO specific terms and expressions related to conformity assessment, as well as information about ISO's adherence to the World Trade Organization (WTO) principles in the Technical Barriers to Trade (TBT), see www.iso.org/iso/foreword.html.

This document was prepared by Technical Committee ISO/TC 43, *Acoustics*, Subcommittee SC 1, *Noise,* in collaboration with ISO/TC 22, *Road vehicles*.

This second edition cancels and replaces the first edition (ISO 16254:2016), which has been technically revised.

The main changes are as follows:

— addition of multiple microphones at each measurement location;

— revised signal processing to improve correlation to human perception;

— further development of tonal loudness as an alternate method to identify frequencies and to assure frequencies so identified are audible to pedestrians.

Any feedback or questions on this document should be directed to the user's national standards body. A complete listing of these bodies can be found at www.iso.org/members.html.

© ISO 2024 – All rights reserved

Documents
Document Sharing Hub
Full document details: BS ISO 16254:2024

Introduction

The advent of road transport vehicles that rely, in whole or in part, on alternative drive trains (e.g. electromotive propulsion) is serving to reduce both air and noise pollution and their adverse impacts on citizens throughout the world. However, the environmental benefits achieved to date by these “hybrid or pure electric” road vehicles have resulted in the unintended consequence of removing a source of audible signal that is used by various groups of pedestrians (e.g. in particular, blind and low vision persons) to detect the approach, presence and/or departure of road vehicles.

Therefore, this document has been developed to provide a method to measure the sound emission of road vehicles at standstill and low speed operation, as well as to quantify the characteristics of any external sound-generation system installed for the purpose of conveying acoustic information about the approach, presence and/or departure of the vehicle to nearby pedestrians.

This document incorporates additional sensor locations and provisions to reduce the measurement variation of reported results and to introduce a metric for determining the frequency of tonal components that does not rely on prior knowledge of the sound signal. Tonal loudness calculates the audibility of the given signals considering how the sounds are perceived by people, providing an optional metric to assess detection and to identify frequency content.

This document was developed in cooperation with the Society of Automotive Engineers (SAE) Vehicle Sound for Pedestrians Subcommittee and the SAE Advanced Driver Assistance Committee.

© ISO 2024 – All rights reserved

Documents
Document Sharing Hub
Full document details: BS ISO 16254:2024

Acoustics — Measurement of sound emitted by road vehicles of category M and N at standstill and low speed operation — Engineering method

1 Scope

This document is derived from ISO 362-1[2] and specifies an engineering method for measuring the sound emitted by M and N category road vehicles at standstill and low speed operating conditions. The specifications reproduce the level of sound which is generated by the principal vehicle sound sources consistent with stationary and low speed vehicle operating conditions relevant for pedestrian safety. The method is designed to meet the requirements of simplicity as far as they are consistent with reproducibility of results under the operating conditions of the vehicle.

The test method requires an acoustic environment which is only obtained in an extensive open space. Such conditions usually exist during the following:

— measurements of vehicles for regulatory certification;

— measurements at the manufacturing stage;

— measurements at official testing stations.

The results obtained by this method give an objective measure of the sound emitted under the specified conditions of test. It is necessary to consider the fact that the subjective appraisal of the annoyance, perceptibility, and/or detectability of different motor vehicles or classes of motor vehicles due to their sound emission are not simply related to the indications of a sound measurement system. As annoyance, perceptibility and/or detectability are strongly related to personal human perception, physiological human condition, culture, and environmental conditions, there are large variations and therefore these terms are not useful as parameters to describe a specific vehicle condition.

Spot checks of vehicles chosen at random rarely occur in an ideal acoustic environment. If measurements are carried out on the road in an acoustic environment which does not fulfil the requirements stated in this document, the results obtained might deviate appreciably from the results obtained using the specified conditions.

In addition, this document provides an engineering method to measure the performance of external sound generation systems intended for the purpose of providing acoustic information to pedestrians on a vehicle's operating condition. This information is reported as objective criteria related to the external sound generation system's sound pressure level, frequency content, and changes in sound pressure level and frequency content as a function of vehicle speed.

This document adds a metric related to the human perception of tonal loudness, the psychoacoustic tonality. The psychoacoustic tonality can be used to estimate audible frequency shifts of the sounds by identifying the most audible component in each auditory frequency band (critical band), as well as to determine if the band(s) so identified meet audibility criteria.

Annex A and Annex C contains background information relevant in the development of this document.

2 Normative references

The following documents are referred to in the text in such a way that some or all of their content constitutes requirements of this document. For dated references, only the edition cited applies. For undated references, the latest edition of the referenced document (including any amendments) applies.

© ISO 2024 – All rights reserved

Documents
Document Sharing Hub
Full document details: BS ISO 16254:2024

ISO 3745:2012, *Acoustics — Determination of sound power levels and sound energy levels of noise sources using sound pressure — Precision methods for anechoic rooms and hemi-anechoic rooms*

ISO 10844, *Acoustics — Specification of test tracks for measuring sound emitted by road vehicles and their tyres*

ISO 26101-1, *Acoustics — Test methods for the qualification of the acoustic environment — Part 1: Qualification of free-field environments*

IEC 60942, *Electroacoustics — Sound calibrators*

IEC 61260-1, *Electroacoustics — Octave-band and fractional-octave-band filters — Part 1: Specifications*

IEC 61672-1, *Electroacoustics — Sound level meters — Part 1: Specifications*

IEC 61672-3, *Electroacoustics — Sound level meters — Part 3: Periodic tests*

ISO/IEC Guide 98-3, *Uncertainty of measurement — Part 3: Guide to the expression of uncertainty in measurement (GUM:1995)*

ECMA-418-2, *Psychoacoustic metrics for ITT equipment: models based on human perception*

3 Terms and definitions

For the purposes of this document, the following terms and definitions apply.

ISO and IEC maintain terminology databases for use in standardization at the following addresses:

— ISO Online browsing platform: available at https://www.iso.org/obp

— IEC Electropedia: available at https://www.electropedia.org/

3.1
front reference plane
vertical plane tangent to the leading edge of the vehicle

3.2
rear reference plane
vertical plane tangent to the trailing edge of the vehicle

3.3
external sound generation system
system that provides an acoustic signal to the external environment of the vehicle for the purpose to provide information to pedestrians

3.4
component
external sound generation system (3.3) intended to emit sound information which can be tested separately from the vehicle

3.5
kerb mass
complete shipping mass of a vehicle fitted with all equipment necessary for normal operation plus the mass of the following elements for M1, N1 and M2 having a maximum authorized mass not exceeding 3 500 kg:

— lubricants, coolant (if needed), washer fluid;

— fuel (tank filled to at least 90 % of the capacity specified by the manufacturer);

— other equipment if included as basic parts for the vehicle, such as spare wheel(s), wheel chocks, fire extinguisher(s), spare parts and tool kit

Note 1 to entry: The definition of kerb mass can vary from country to country, but in this document, it refers to the definition contained in ISO 1176[4].

© ISO 2024 – All rights reserved

Documents
Document Sharing Hub
Full document details: BS ISO 16254:2024

Note 2 to entry: M and N vehicle categories are defined in SAE J2889-1[8] and ISO 362-1[2].

3.6
mass in running order
nominal mass of an N2, N3 or M2 vehicle having a maximum authorized mass greater than 3 500 kg, or an M3 vehicle as determined by the following conditions:

a) the mass in running order is taken as the sum of the unladen vehicle mass and the driver's mass;

b) in the case of category M2 and M3 vehicles that include seating positions for additional crewmembers, their mass is incorporated in the same way and equal to that of the driver

Note 1 to entry: The driver's mass is calculated in accordance with ISO 2416[5].

Note 2 to entry: Unladen vehicle mass is defined in ISO 362-1[2].

3.7
full vehicle operation
operation of a vehicle with all systems and *components* (3.4) operating according to the manufacturer's specification for normal road use

3.8
simulated vehicle operation
operation of a vehicle with some systems or *components* (3.4) disabled to reduce noise interference during testing which may include external signals applied to the vehicle to simulate actual in-use signals

3.9
lowest frequency of interest
frequency below which there is no signal content relevant to the measurement of sound emission for the vehicle under test

3.10
critical band
filter within the human cochlea describing the frequency resolution of the auditory system with characteristics that are usually estimated from the results of masking experiments

3.11
tonality
characteristic of sound containing a single-frequency component or narrow-band components that emerge audibly from the total sound

3.12
specific tonality
tonality (3.11) in a single *critical band* (3.10)

4 Symbols and abbreviated terms

Table 1 — Symbols and abbreviated terms and the paragraph in which they are first used

Symbol	Unit	Subclause	Explanation
AA′	—	6.1.2	Line perpendicular to vehicle travel which indicates the beginning of the zone to record sound pressure level during test.
BB′	—	6.1.2	Line perpendicular to vehicle travel which indicates end of the zone to record sound pressure level during test.
CC′	—	6.1.2	Centreline of vehicle travel.
δ_1 - δ_7	dB	D.2	Input quantities to allow for any uncertainty in A-weighted sound pressure level.
δ_8 - δ_{14}	dB	D.3	Input quantities to allow for any uncertainty in one-third octave band A-weighted sound pressure level.

© ISO 2024 – All rights reserved

Documents
Document Sharing Hub
Full document details: BS ISO 16254:2024

Table 1 *(continued)*

Symbol	Unit	Subclause	Explanation
δ_{15} - δ_{21}	Hz	D.4	Input quantities to allow for any uncertainty in frequency measurement used for the determination of frequency shift.
$f_{i,\text{speed}}$	Hz	7.2.5.3.1	Single frequency component of external sound generation system at a given vehicle speed.
$f_{i,\text{ref}}$	Hz	7.2.5.3.1	Single frequency component of external sound generation system at reference vehicle speed.
$\Delta f_{percent}$	%	7.2.5.3.1	Frequency shift expressed in percent of a reference frequency.
Δf	Hz	7.2.3	Frequency resolution of narrowband analysis used to measure frequency spectra for the purpose of determining frequency shift information.
F_s	Hz	5.1.1	Sampling frequency used by digital signal processing system
i	—	6.3.2	Index for left or right microphone locations
j	—	7.1.6.1	Index for single test run within stopped or slow speed cruise test conditions
$L_{\text{st,fwd}}$	dB	7.1.7.2	Vehicle A-weighted sound pressure level in stationary forward condition.
$L_{\text{st,rev}}$	dB	7.1.8	Vehicle A-weighted sound pressure level in stationary reverse condition.
$L_{\text{crs,10}}$	dB	7.1.9	Cruise vehicle A-weighted sound pressure level at a vehicle speed of 10 km/h.
$L_{\text{test},j}$	dB	7.1.6.1	A-weighted sound pressure level result of jth test run.
L_{bgn}	dB	6.3.1	Background noise A-weighted sound pressure level.
$L_{\text{bgn,L},i}$	dB	6.3.1	Background noise A-weighted sound pressure level, left side of vehicle, i^{th} microphone location.
$L_{\text{bgn,R},i}$	dB	6.3.1	Background noise A-weighted sound pressure level, right side of vehicle, i^{th} microphone location.
$L_{\text{bgn_BAND}}$	dB	6.3.2	Background noise one-third octave A-weighted sound pressure level. This result is reported as a frequency spectrum between 160 Hz and 5 000 Hz,
$L_{\text{bgn_BAND,L},i}$	dB	6.3.2	Background noise one-third octave A-weighted sound pressure level, left side of vehicle, i^{th} microphone location. This result is reported as a frequency spectrum between 160 Hz and 5 000 Hz,
$L_{\text{bgn_BAND,R},i}$	dB	6.3.2	Background noise one-third octave A-weighted sound pressure level, right side of vehicle, i^{th} microphone location. This result is reported as a frequency spectrum between 160 Hz and 5 000 Hz,
L_x	dB	D.2	A-weighted sound pressure level for any stationary or cruise condition for use in assessment of measurement uncertainty.
$L_{x,\text{band}}$	dB	D.3	A-weighted sound pressure level per one-third octave band for any stationary or cruise condition for use in assessment of measurement uncertainty.
$L_{x,\text{meas}}$	dB	D.2	A-weighted sound pressure level for any stationary or cruise condition for use in assessment of measurement uncertainty.
$\text{MicLeft}_{_i}$	—	7.1.1	ith Microphone situated at left side of vehicle
$\text{MicRight}_{_i}$	—	7.1.1	ith Microphone situated at right side of vehicle
MicLeft_1	—	7.1.1	Microphone situated at left side of vehicle, with height of 0,8 m above ground
MicLeft_2	—	7.1.1	Microphone situated at left side of vehicle, with height of 1,0 m above ground
MicLeft_3	—	7.1.1	Microphone situated at left side of vehicle, with height of 1,2 m above ground

© ISO 2024 – All rights reserved

Documents
Document Sharing Hub
Full document details: BS ISO 16254:2024

Table 1 *(continued)*

Symbol	Unit	Subclause	Explanation
$MicLeft_4$	—	7.1.1	Microphone situated at left side of vehicle, with height of 1,4 m above ground
$MicLeft_5$	—	7.1.1	Microphone situated at left side of vehicle, with height of 1,6 m above ground
$MicRight_1$	—	7.1.1	Microphone situated at right side of vehicle, with height of 0,8 m above ground
$MicRight_2$	—	7.1.1	Microphone situated at right side of vehicle, with height of 1,0 m above ground
$MicRight_3$	—	7.1.1	Microphone situated at right side of vehicle, with height of 1,2 m above ground
$MicRight_4$	—	7.1.1	Microphone situated at right side of vehicle, with height of 1,4 m above ground
$MicRight_5$	—	7.1.1	Microphone situated at right side of vehicle, with height of 1,6 m above ground
$L_{MicLeft_i_BAND,j}$	dB	7.1.6.2	Maximum one-third octave results for each band over the entire measurement interval for each $MicLeft__i$ location for the *j*th measurement run. This result is reported as a frequency spectrum between 160 Hz and 5 000 Hz,
$L_{MicRight_i_BAND,j}$	dB	7.1.6.2	Maximum one-third octave results for each band over the entire measurement interval for each $MicRight__i$ location for the *j*th measurement run
$L_{MicLeft_BAND,j}$	dB	7.1.6.4.2	Maximum one-third octave results for each band over the entire measurement interval for all $MicLeft__i$ locations for the *j*th measurement run. This result is reported as a frequency spectrum between 160 Hz and 5 000 Hz,
$L_{MicRight_BAND,j}$	dB	7.1.6.4.2	Maximum one-third octave results for each band over the entire measurement interval for all $MicRight__i$ locations for the *j*th measurement run. This result is reported as a frequency spectrum between 160 Hz and 5 000 Hz,
$L_{MicLeft_i_BAND}$	dB	7.1.6.2	Maximum one-third octave results for each band over the entire measurement interval for each $MicLeft__i$ location.
$L_{MicRight_i_BAND}$	dB	7.1.6.2	Maximum one-third octave results for each band over the entire measurement interval for each $MicRight__i$ location. This result is reported as a frequency spectrum between 160 Hz and 5 000 Hz,
$L_{MicLeft_i_OA,j}$	dB	7.1.6.3.2	Maximum overall sound pressure level result over the entire measurement interval for each $MicLeft__i$ location for the *j*th measurement run
$L_{MicRight_i_OA,j}$	dB	7.1.6.3.2	Maximum overall sound pressure level result over the entire measurement interval for each $MicRight__i$ location for the *j*th measurement run
$L_{MicLeft_OA,j}$	dB	7.1.6.2	Maximum overall sound pressure level result over the entire measurement interval for all $MicLeft__i$ locations for the *j*th measurement run
$L_{MicRight_OA,j}$	dB	7.1.6.2	Maximum overall sound pressure level result over the entire measurement interval for all $MicRight__i$ locations for the *j*th measurement run
$L_{MicLeft_i_OA}$	dB	7.1.5.3.1	Maximum overall sound pressure level result over the entire measurement interval for each $MicLeft__i$ locations averaged over all *j* runs
$L_{MicRight_i_OA}$	dB	7.1.5.3.1	Maximum overall sound pressure level result over the entire measurement interval for each $MicRight__i$ locations averaged over all *j* runs

© ISO 2024 – All rights reserved

Documents
Document Sharing Hub
Full document details: BS ISO 16254:2024

Table 1 *(continued)*

Symbol	Unit	Subclause	Explanation
$L_{\mathrm{MicLeftBAND}}$	dB	7.1.7.3	Maximum one-third octave sound pressure level over the entire measurement interval for all $\mathrm{MicLeft_i}$ locations averaged over all *j* measurement runs. This result is reported as a frequency spectrum between 160 Hz and 5 000 Hz,
$L_{\mathrm{MicRightBAND}}$	dB	7.1.7.3	Maximum one-third octave sound pressure level over the entire measurement interval for all $\mathrm{MicRight_i}$ locations averaged over all *j* measurement runs. This result is reported as a frequency spectrum between 160 Hz and 5 000 Hz,
$L_{\mathrm{MicLeftOA}}$	dB	7.1.7.2	Maximum overall sound pressure level result over the entire measurement interval for all $\mathrm{MicLeft_i}$ locations
$L_{\mathrm{MicRightOA}}$	dB	7.1.7.2	Maximum overall sound pressure level result over the entire measurement interval for all $\mathrm{MicRight_i}$ locations
N	—	7.2.3	Block size of digital sample used for discrete Fourier transform or autopower spectrum analysis.
PP′	—	6.1.2	Line perpendicular to vehicle travel which indicates location of microphones.
v_{ref}	km/h	7.2.5.2	Reference vehicle velocity used for calculating frequency shift percentage.
v_{test}	km/h	7.2.5.3.1	Target vehicle test velocity.
$f_{\mathrm{band,speed}}$	Hz	J.4.6	Main frequency of tonal component in a critical band belonging to a certain frequency shift and speed
$f_{\mathrm{band,speed,filtered}}$	Hz	J.4.6	Valid frequencies from the tonality analysis over time in a critical band belonging to a certain frequency shift and speed
T'_{bgn}	$\mathrm{tu_{HMS}}$	8	Specific tonality of the background noise in a critical band
$T'_{\mathrm{speed,shift}}$	$\mathrm{tu_{HMS}}$	J.4.4	Specific tonality in critical band belonging to a certain frequency shift and speed
z	$\mathrm{Bark_{HMS}}$	J.4.6	Critical-band rate
$Z_{\mathrm{speed,shift}}$	$\mathrm{Bark_{HMS}}$	J.4.4	Critical-band rate corresponding to a certain frequency shift and speed

5 Instrumentation

5.1 Instruments for acoustic measurement

5.1.1 General

The apparatus used for measuring the sound pressure level shall be a sound level meter or equivalent measurement system meeting the requirements of class 1 instruments (inclusive of the recommended windscreen, if used). These requirements are described in IEC 61672–1.

The entire measurement system shall be checked by means of a sound calibrator that fulfils the requirements of class 1 sound calibrators in accordance with IEC 60942.

Measurements shall be carried out using the time weighting “F” of the acoustic measurement instrument and the “A” frequency weighting also described in IEC 61672–1. When using a system that includes a periodic monitoring of the A-weighted sound pressure level, a reading should be made at a time interval not greater than 30 ms.

When no general statement or conclusion can be made about conformance of the sound level meter model to the full specifications of IEC 61672-1, the apparatus used for measuring the sound pressure level shall

© ISO 2024 – All rights reserved

Documents
Document Sharing Hub
Full document details: BS ISO 16254:2024

be a sound level meter or equivalent measurement system meeting the conformity requirements of Class 1 instruments as described in IEC 61672-3.

NOTE The tests of IEC 61672-3 cover only a limited subset of the specifications in IEC 61672-1 for which the scope is large (temperature range, frequency requirements up to 20 kHz, etc.). It is economically not feasible to verify the whole IEC 61672-1 requirements on each item of a computerized data acquisition systems model. Apparently, until today, no computerized data acquisition system available complies with the full specifications of IEC 61672-1. It is beyond the possibilities of the users of these systems to prove conformity of the instrumentation required by the test code.

When measurements are carried out for one-third octaves, the instrumentation shall meet all requirements of IEC 61260–1, class 1.

When measurements are carried out for frequency shift, the digital sound recording system shall have at least a 16 bit quantization. The sampling rate, F_s, and the dynamic range shall be appropriate to the signal of interest.

5.1.2 Daily verification and adjustment

At the beginning of every measurement session, the entire acoustic measurement system shall be checked and adjusted, if possible, by means of a sound calibrator as described in 5.1.1. At the end of every measurement session, the entire acoustic measurement system shall be checked by means of a sound calibrator as described in 5.1.1.

Without any further adjustment, the difference between the readings at the beginning and the end shall be less than or equal to 0,5 dB. If this value is exceeded, the results of the measurements obtained after the previous satisfactory check shall be discarded.

NOTE 1 A bi-yearly IEC 61672-3 calibration permits the use of a daily sensitivity check and adjustment.

NOTE 2 The purpose of the check at the beginning of the measurement session is twofold:

a) To ensure the measurement system is in good working order, and

b) To adjust the level consistent with the environmental conditions of the day.

The purpose of the check at the end of the measurement session is also twofold:

— To ensure the measurement system remains in good working order, and

— To verify the adjusted level remains within expected tolerances for a repeatable and reproduceable measurement.

5.1.3 Conformity with requirements

Conformity of the sound calibrator with the requirements of IEC 60942 shall be verified once a year. Conformity of the instrumentation system with the requirements of IEC 61672–1 shall be verified at least every 2 years using IEC 61672-3. All conformity testing shall be conducted by a laboratory, which is authorized to perform calibrations traceable to the appropriate standards.

NOTE The tests of IEC 61672-3 cover only a limited subset of the specifications in IEC 61672-1 for which the scope is large (temperature range, frequency requirements up to 20 kHz, etc.). It is not feasible to verify the whole IEC 61672-1 requirements on each item of a computerized data acquisition system. Computerized data acquisition system available comply with the necessary specifications of IEC 61672-1 and testing specifications of IEC 61672-3 as required for this document.

5.2 Instrumentation for speed measurements

The road speed of the vehicle shall be measured with instruments meeting specification limits of at least ±0,5 km/h when using continuous measuring devices.

NOTE A continuous measuring device will determine all required speed information with one device.

© ISO 2024 – All rights reserved

Documents
Document Sharing Hub
Full document details: BS ISO 16254:2024

5.3 Meteorological instrumentation

The meteorological instrumentation used to monitor the environmental conditions during the test shall meet the specifications of the following:

— ±1 °C or less for a temperature measuring device;

— ±1,0 m/s for a wind speed-measuring device;

— ±5 hPa for a barometric pressure measuring device;

— ±5 % for a relative humidity measuring device.

6 Acoustic environment, meteorological conditions, and background noise

6.1 Test site

6.1.1 General

The specifications for the test site provide the necessary acoustic environment to carry out the full vehicle or component tests documented in this document. Outdoor and indoor test environments that meet the specifications of this document provide equivalent acoustic environments and produce results that are equally valid.

6.1.2 Outdoor testing

The test site shall be substantially level. The test track construction and surface shall meet the requirements of ISO 10844. Figure 1 gives information on test site dimensions.

Within a radius of 50 m around the centre of the track, the space shall be free of large reflecting objects, such as fences, rocks, bridges or buildings. The test track and the surface of the site shall be dry and free from absorbing materials, such as powdery snow or loose debris.

In the vicinity of the microphones, there shall be no obstacle that can influence the acoustic field and no person shall remain between the microphone and the noise source. The meter observer shall be positioned so as not to influence the meter reading.

NOTE 1 Buildings outside the 50 m radius might have significant influence if their reflection focuses on the test track.

The term “substantially level” is intended to convey that the test site shall not have slopes or discontinuities that would render invalid the assumption the site provided free-field acoustic propagation. This is not to limit slopes on the test site necessary for water management, drainage, etc. Engineering judgement is expected to be applied to determine the effect on the site of any obstacle. The test track itself is subject to the requirements specified.

For the purpose of this document, test track constructions and surfaces according to ISO 10844 will also provide satisfactory results for vehicle speeds of up to 20 km/h.

NOTE 2 Government regulations can require specific surface requirements.

© ISO 2024 – All rights reserved

Documents
Document Sharing Hub
Full document details: BS ISO 16254:2024

Dimensions in metres

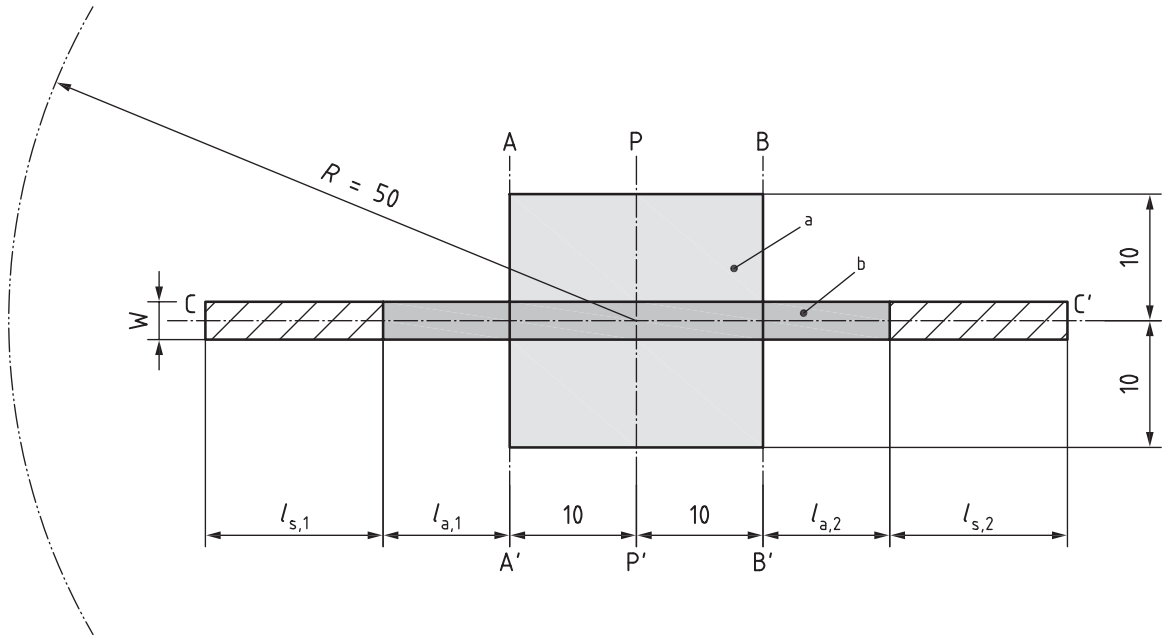

Key

$l_{s,1}$	entrance construction run-up section (diagonal hatch area), in metres
$l_{s,2}$	exit construction run-up section (diagonal hatch area), in metres (length of entrance and exit construction run-up sections can differ)
$l_{a,1}$	entrance drive lane extension beyond propagation area, in metres
$l_{a,2}$	exit drive lane extension beyond propagation area, in metres (length of entrance and exit drive lane extensions can differ)
w	drive lane width, in metres
AA'	entrance to propagation area 10 m before line PP'
BB'	exit from propagation area 10 m after line PP'
CC'	drive lane centre line (longitudinal axis)
PP	microphone line (transverse axis)
a	Propagation area.
b	Drive lane.

NOTE 1 Buildings outside the 50 m radius can have significant influence if their reflection focuses on the test track.

NOTE 2 Shaded area ("test area") is the minimum area that it is required to be covered with a surface complying with ISO 10844.

Figure 1 — Test site dimensions

6.1.3 Indoor hemi anechoic or anechoic testing

This subclause specifies conditions applicable when testing a full vehicle, either operating as it would on the road with all systems operational or operating in a mode where only the external sound generation system is operational in a hemi-anechoic space, or for testing a component in either a hemi-anechoic or anechoic space.

The test facility shall meet requirements of ISO 26101-1 or ISO 3745:2012, Annex A:

a) within the following space as shown in Figure 2.

Points D, E, F and G are locations used for the microphones in conducting testing according to the method described in Clause 7.

© ISO 2024 – All rights reserved

Documents
Document Sharing Hub
Full document details: BS ISO 16254:2024

Dimensions in meters

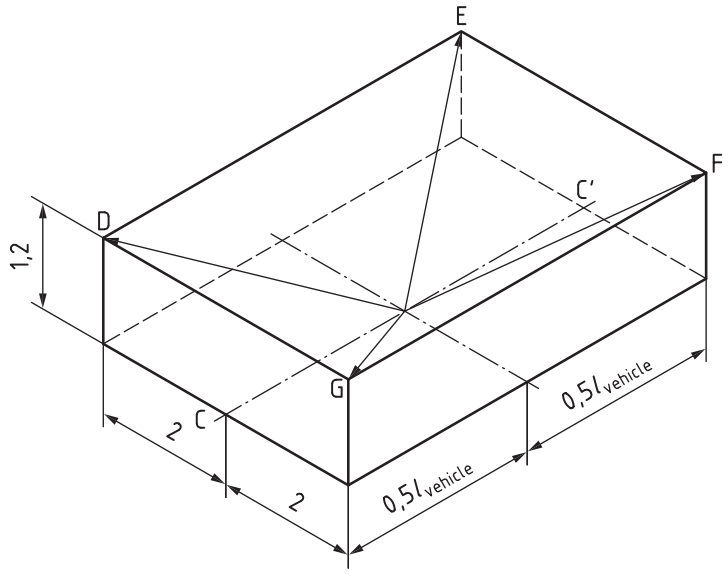

Key

CC' centreline of vehicle travel

D, E, F, G microphone positions

Figure 2 — Spatial dimensions for acoustic space defined to be hemi-anechoic

b) For qualifying the hemi-anechoic space, the following evaluation shall be conducted:

— sound source location shall be placed on the floor in middle of the space deemed to be hemi-anechoic;

— sound source shall provide a broadband input for measurement;

— evaluation shall be conducted in one-third octave bands;

— microphone locations for evaluation shall be on a line from the source location to each position of microphones used for measurement in the document shown by points D, E, F, and G in Figure 2. This is commonly referred at the microphone transverse;

— the maximum spacing of the measurement points for evaluation on the microphone transverse line shall depend on the size of the space deemed hemi-anechoic. A minimum of 10 points shall be used;

— the one-third octave bands used to establish hemi-anechoic qualification shall be defined to cover the spectral range of interest.

c) The test facility shall have a cut-off frequency, as defined in ISO 26101-1, lower than the lowest frequency of interest.

In the vicinity of the microphones, there shall be no obstacle that can influence the acoustic field and no person shall remain between the microphone and the noise source. The meter observer shall be positioned so as not to influence the meter reading.

NOTE 1 It is expected that users of this document will understand that valid measurements can only be made when the cut-off frequency is lower than the lowest frequency of interest. A specific numerical requirement for cut-off frequency is not given due to the range of variation of appropriate cut-off frequencies depending upon the measured vehicle.

NOTE 2 This document adds additional microphone hights up to 1,6 m. Qualification to 1,2 m height as in previous editions is expected to produce acceptable results.

In the absence of any information on the range of frequencies to be measured for hemi-anechoic qualification, it is recommended to use the frequency range from 100 Hz to 10 000 Hz.

© ISO 2024 – All rights reserved

Documents
Document Sharing Hub
Full document details: BS ISO 16254:2024

6.1.4 Indoor external sound generation system testing

This subclause specifies conditions applicable when testing only the external sound generation system separate from the vehicle.

The test facility shall meet the requirements of ISO 26101-1 or ISO 3745:2012, Annex A following the same qualification criteria used in 6.1.3 with the following exception: The space to be deemed hemi-anechoic shall extend at least 2 m in all radial directions from the centre location used for the source.

The test facility shall have a cut-off frequency lower than the lowest frequency of interest.

In the vicinity of the microphone, there shall be no obstacle that can influence the acoustic field and no person shall remain between the microphone and the noise source. The meter observer shall be positioned so as not to influence the meter reading. Microphones shall be located as specified in 7.1.1.

6.2 Meteorological conditions

6.2.1 General

Meteorological conditions are specified to provide a range of normal operating temperatures and to prevent abnormal readings due to extreme environmental conditions.

A value representative of temperature, relative humidity, and barometric pressure shall be recorded during the measurement interval.

6.2.2 Outdoor measurements

The meteorological instrumentation shall deliver data representative for the test site and shall be positioned adjacent to the test area at a height representative of the height of the measuring microphone.

The measurements shall be made when the ambient air temperature is within the range from 5 °C to 40 °C.

The ambient temperature may of necessity be restricted to a narrower temperature range such that all key vehicle functionalities that can reduce vehicle noise emissions (e.g. start/stop, hybrid propulsion, battery propulsion, fuel-cell stack operation) are enabled according to manufacturer's specifications.

The tests shall not be carried out if the wind speed, including gusts, at microphone height exceeds 5 m/s during the noise measurement interval.

6.2.3 Indoor measurements

The measurements shall be made when the ambient air temperature is within the range from 5 °C to 40 °C.

The ambient temperature may of necessity be restricted to a narrower temperature range such that all key vehicle functionalities that can reduce vehicle noise emissions (e.g. start/stop, hybrid propulsion, battery propulsion, fuel-cell stack operation) are enabled according to the manufacturer's specifications.

6.3 Background noise

6.3.1 Measurement criteria for A-weighted sound pressure level

The background, or ambient noise, shall be measured for a duration of at least 10 s. A 10 s sample taken from these measurements shall be used to calculate the reported background noise, taking account to ensure the 10 s sample selected is representative of the background noise in absence of any transient disturbance. The measurements shall be made with the same microphones and microphone locations used during the test.

Background noise requirements apply to all test conditions and test locations.

© ISO 2024 – All rights reserved

Documents
Document Sharing Hub
Full document details: BS ISO 16254:2024

The overall sound pressure level of the background shall be reported as the largest overall sound pressure level from all microphones, L_{bgn} as given by Formula (1):

$$L_{bgn} = \max(L_{bgn,L,i}, L_{bgn,R,i}) \quad (1)$$

When testing in an indoor facility, the noise emitted by the roller-bench, chassis dynamometer or other test facility equipment, without the vehicle installed or present, inclusive of the noise caused by air handling of facility and vehicle cooling, shall be reported as the background noise. The recorded maximum A-weighted sound pressure level in the selected 10 s samples and from all microphones, as given by Formula (1), shall be reported as the background noise, L_{bgn}.

The A-weighted overall sound pressure level of the background noise shall be at least 6 dB below the measurement of the vehicle or external sound generation system under test.

The use of indoor test facilities can be necessary to achieve the specifications in this document.

The background noise frequency range shall be reported from at least 160 Hz to 5 000 Hz.

Annex G gives measurement criteria for background noise A-weighted sound pressure levels in flowchart form as an aid to measurement and reporting results.

NOTE Background noise measurements account for the variations in time at all microphones. The intent of the above statements is to capture the entire range of variation experienced at the test facility to provide an assessment of the suitability of the test facility to carry out the specified measurements. It is expected that persons carrying out such measurements have evaluated the facility background noise over sufficiently long periods of time that the selected 10 second sample is representative of the facility background noise.

6.3.2 Background noise requirements when analysing in one-third octave bands

The one-third octave frequency spectrum measured according to IEC 61260–1, corresponding to the maximum hold in each individual one-third octave band of background noise shall be reported as given by Formula (2) to Formula (4). These results are reported as a frequency spectrum between 160 Hz and 5 000 Hz,

$$L_{bgn_BAND,L,i} = \max(\text{Each frequency and each left microphone}) \quad (2)$$

$$L_{bgn_BAND,R,i} = \max(\text{Each frequency and each right microphone}) \quad (3)$$

$$L_{bgn_BAND} = \max(L_{bgn_BAND,L,i}, L_{bgn_BAND,R,i}) \quad (4)$$

The level of background noise in each one-third octave of interest, analysed according to 6.3.1, shall be at least 6 dB below the measurement of the vehicle or external sound generation system under test in each one-third octave band of interest.

Annex G gives measurement criteria for background noise one-third octave band sound pressure levels in flowchart form as an aid to measurement and reporting results.

NOTE 1 The requirements for margin between background noise and test results are given to maintain a maximum error of 1 dB or less solely due to background noise. Total measurement uncertainty will include uncertainty due to additional factors.

NOTE 2 Reporting the background noise as described is the same as treating all microphones as if they were a single microphone and reporting the maximum one-third octave result, by individual band, wherever it occurs. The purpose is to establish the highest possible disturbance signal as the baseline from which to assess the signal to noise criteria of 6.3.2.

© ISO 2024 – All rights reserved

Documents
Document Sharing Hub
Full document details: BS ISO 16254:2024