BS ISO 16316:2024

BSI Standards Publication

Windows, doors and curtain walling — Impacted by windborne debris in windstorms — Test method and classification

Documents
Document Sharing Hub

Full document details: BS ISO 16316:2024

National foreword

This British Standard is the UK implementation of ISO 16316:2024.

The UK participation in its preparation was entrusted to Technical Committee B/538/1, Windows and doors.

A list of organizations represented on this committee can be obtained on request to its committee manager.

Contractual and legal considerations

This publication has been prepared in good faith, however no representation, warranty, assurance or undertaking (express or implied) is or will be made, and no responsibility or liability is or will be accepted by BSI in relation to the adequacy, accuracy, completeness or reasonableness of this publication. All and any such responsibility and liability is expressly disclaimed to the full extent permitted by the law.

This publication is provided as is, and is to be used at the recipient's own risk.

The recipient is advised to consider seeking professional guidance with respect to its use of this publication.

This publication is not intended to constitute a contract. Users are responsible for its correct application.

© The British Standards Institution 2024
Published by BSI Standards Limited 2024

ISBN 978 0 539 27138 6

ICS 91.060.10; 91.060.50

Compliance with a British Standard cannot confer immunity from legal obligations.

This British Standard was published under the authority of the Standards Policy and Strategy Committee on 31 October 2024.

Amendments/corrigenda issued since publication

Date	Text affected

Documents
Document Sharing Hub

Full document details: BS ISO 16316:2024

International Standard

ISO 16316

Windows, doors and curtain walling — Impacted by windborne debris in windstorms — Test method and classification

First edition
2024-10

Reference number
ISO 16316:2024(en)

© ISO 2024

Documents
Document Sharing Hub

Full document details: BS ISO 16316:2024

COPYRIGHT PROTECTED DOCUMENT

© ISO 2024

All rights reserved. Unless otherwise specified, or required in the context of its implementation, no part of this publication may be reproduced or utilized otherwise in any form or by any means, electronic or mechanical, including photocopying, or posting on the internet or an intranet, without prior written permission. Permission can be requested from either ISO at the address below or ISO's member body in the country of the requester.

ISO copyright office
CP 401 • Ch. de Blandonnet 8
CH-1214 Vernier, Geneva
Phone: +41 22 749 01 11
Email: copyright@iso.org
Website: www.iso.org

Published in Switzerland

Documents
Document Sharing Hub
Full document details: BS ISO 16316:2024

Contents

Page

Foreword ... **v**

1 Scope ... **1**

2 Normative references ... **1**

3 Terms and definitions ... **1**

4 Symbols and abbreviated terms ... **4**

5 Principle and significance ... **4**
5.1 General ... 4
5.2 Significance and use ... 5
5.3 Options ... 5

6 Test apparatus ... **5**

7 Test specimens ... **7**
7.1 General ... 7
7.2 Test specimen size ... 7
7.3 Test specimen ... 7
7.4 Order of testing ... 8

8 Test procedure ... **8**
8.1 General ... 8
8.2 Preparation ... 8
8.2.1 General ... 8
8.2.2 Installation ... 8
8.2.3 Conditioning ... 8
8.2.4 Missile impact ... 8
8.3 Missile impact test ... 9
8.3.1 Projectile descriptions ... 9
8.3.2 Impact-speed tolerance ... 9
8.3.3 Impact angle ... 9
8.3.4 Impact location ... 10
8.4 Air pressure cycling test ... 16
8.4.1 General ... 16
8.4.2 Leakage ... 16
8.4.3 Air-pressure differential ... 17
8.4.4 Cyclic test loading ... 17

9 Pass and fail assessment criteria ... **18**
9.1 General ... 18
9.2 Glass infill(s) ... 18
9.3 Panel(s) ... 18
9.4 External emergency exit doorset (panic exit doorset) ... 18
9.5 Edge releases ... 18
9.6 Windstorm protective systems ... 18

10 Product qualification ... **18**
10.1 Requirements ... 18
10.2 Applicable missile for impact test ... 19
10.3 Levels of protection ... 19
10.4 Reference wind-speed zones ... 19

Annex A (normative) **Required information and test report** ... **21**

Annex B (informative) **Recommended missile-propulsion devices** ... **24**

Annex C (informative) **Reference wind speed** ... **26**

Annex D (normative) **Flow chart of test procedure** ... **27**

© ISO 2024 – All rights reserved

Documents
Document Sharing Hub
Full document details: BS ISO 16316:2024

Annex E (informative) **Guidance on substitution criteria for fenestration assemblies qualified under this document** 29

Annex F (informative) **Test program examples** 43

Annex G (informative) **Flow chart of engineering analysis for wind-borne debris resistant building envelope design** 62

Bibliography 64

© ISO 2024 – All rights reserved

Documents
Document Sharing Hub

Full document details: BS ISO 16316:2024

Foreword

ISO (the International Organization for Standardization) is a worldwide federation of national standards bodies (ISO member bodies). The work of preparing International Standards is normally carried out through ISO technical committees. Each member body interested in a subject for which a technical committee has been established has the right to be represented on that committee. International organizations, governmental and non-governmental, in liaison with ISO, also take part in the work. ISO collaborates closely with the International Electrotechnical Commission (IEC) on all matters of electrotechnical standardization.

The procedures used to develop this document and those intended for its further maintenance are described in the ISO/IEC Directives, Part 1. In particular, the different approval criteria needed for the different types of ISO documents should be noted. This document was drafted in accordance with the editorial rules of the ISO/IEC Directives, Part 2 (see www.iso.org/directives).

ISO draws attention to the possibility that the implementation of this document may involve the use of (a) patent(s). ISO takes no position concerning the evidence, validity or applicability of any claimed patent rights in respect thereof. As of the date of publication of this document, ISO had not received notice of (a) patent(s) which may be required to implement this document. However, implementers are cautioned that this may not represent the latest information, which may be obtained from the patent database available at www.iso.org/patents. ISO shall not be held responsible for identifying any or all such patent rights.

Any trade name used in this document is information given for the convenience of users and does not constitute an endorsement.

For an explanation of the voluntary nature of standards, the meaning of ISO specific terms and expressions related to conformity assessment, as well as information about ISO's adherence to the World Trade Organization (WTO) principles in the Technical Barriers to Trade (TBT), see www.iso.org/iso/foreword.html.

This document was prepared by Technical Committee ISO/TC 162, *Doors, windows and curtain walling*.

Any feedback or questions on this document should be directed to the user's national standards body. A complete listing of these bodies can be found at www.iso.org/members.html.

© ISO 2024 – All rights reserved

Documents
Document Sharing Hub
Full document details: BS ISO 16316:2024

Documents
Document Sharing Hub

Windows, doors and curtain walling — Impacted by windborne debris in windstorms — Test method and classification

1 Scope

This document specifies a method to determine the windborne debris-resistance of windows (including skylights), doors or curtain walling to natural threats characterized by simulated destructive-windstorm events. The test method can also be used on windstorm protective systems for the missile impact tests.

The test method determines the performance of windows, doors or curtain walling, under conditions representative of events that occur in severe, destructive-windstorm environments using simulated missile impact(s) followed by the application of cyclic test load.

This document is applicable to the design of an entire window (including skylight), door or curtain walling, and also in case these systems are tested in combination with windstorm protective system assemblies and their installation.

This document is not applicable to:

— exterior garage doors and rolling doors are beyond the scope of this document and this document does not refer to:

  — bullet;

  — blast;

  — flood resistance.

— windstorm protective systems when tested alone, i.e. not tested in combination with windows, skylights, doors or curtain walling. When windows, skylights, doors or curtain walling are tested in combination with windstorm protective systems, pass and fail assessment criteria (see Clause 9), only refer to windows, skylights, doors or curtain walling themselves. This document does not define pass or fail criteria for windstorm protective systems.

2 Normative references

There are no normative references in this document.

3 Terms and definitions

For the purposes of this document, the following terms and definitions apply.

ISO and IEC maintain terminology databases for use in standardization at the following addresses:

— ISO Online browsing platform: available at https://www.iso.org/obp

— IEC Electropedia: available at https://www.electropedia.org/

© ISO 2024 – All rights reserved

Documents
Document Sharing Hub
Full document details: BS ISO 16316:2024

3.1
windstorm protective system
construction assemblies applied, attached, or locked over an exterior glazed opening system to protect that system from *windborne debris* (3.4) during *destructive windstorm* (3.2) events

Note 1 to entry: Windstorm protective systems include types that are fixed, operable, or removable.

3.2
destructive windstorm
severe weather event with high winds and turbulent gusts, such as a tropical cyclone, having a *reference wind speed* (3.3) capable of generating *windborne debris* (3.4)

3.3
reference wind speed
V_r
velocity of the wind used in calculation as determined by the ordering party

Note 1 to entry: The reference wind speed is intended to represent the 3-second gust wind speed design basis for a tropical cyclone such as used to describe a 50-year recurrence period or annual 0,02 probability of being exceeded ($V_r = V_{t=3\ s}$, see Annex C).

3.4
windborne debri
object carried by the wind in windstorms

3.5
air pressure differential
P
specified maximum air pressure differential in cyclic test load across the specimen, creating an inward or outward load

Note 1 to entry: The air pressure portion of the test shall use the *test loading sequence* (3.12). Select P_{pos} and P_{neg} for the maximum inward (positive) and maximum outward (negative) air pressure differential for which qualification is sought.

Note 2 to entry: P is determined depending on local building code or by the design professional.

Note 3 to entry: The air pressure differential is expressed in Pascal or its multiples.

3.6
windborne debris-resistance
performance of a window, a door or a curtain walling, [also in case these systems are tested in combination with a *windstorm protective system* (3.1)], to resist the impact of *windborne debris* (3.4) and *cyclic test load* (3.11) without occurrence of specified failure

3.7
test specimen
entire assembled unit submitted for test

3.8
missile
object that is propelled towards a *test specimen* (3.7), i.e. *lumber missile* (3.9) and *steel ball* (3.10) (3.11)

3.9
lumber missile
dressed piece of surface-dried, soft-wood, structural timber that impacts the glazing surface of the specimen.

3.10
steel ball
solid steel ball weighing 2 g ± 5 %, with an 8 mm nominal diameter

© ISO 2024 – All rights reserved

Documents
Document Sharing Hub
Full document details: BS ISO 16316:2024

3.11
cyclic test load
beginning at a specified *air pressure differential* (3.5), the application of a positive (and negative) pressure to achieve another specified air pressure differential and returning to the initial air pressure differential

3.12
test-loading sequence
group of tests carried out in the following sequence:

a) missile impact test

b) air pressure cycling test

3.13
serviceability pressure
uniform, static air-pressure difference from wind, inward or outward, for which the test specimen is designed under service load conditions.

Note 1 to entry: Serviceability pressures are based on reference wind speed with a mean recurrence interval that relates to the importance level of the construction.

3.14
fenestration assembly
exterior windows (including skylights), doors, curtain walling, or a combination thereof, intended to be installed in a building

3.15
height above ground level of assembly
H_a
distance between the ground level and the head of the building component itself.

Note 1 to entry: In case of different ground level for a single front of a building (see key 1 and key 2 Figure 1), the ground level is the lower altitude line referred to each front of the building (see key 2 of Figure 1).

Note 2 to entry: for the definition of "head" of a window, see ISO 22496.

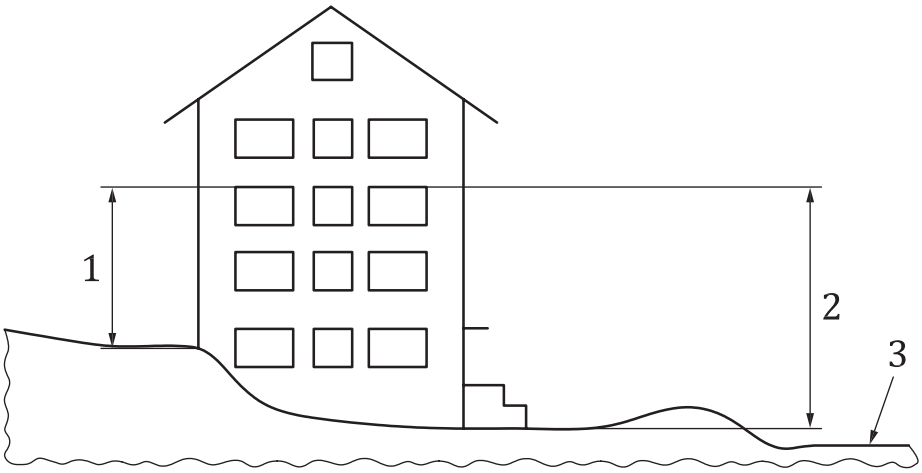

Key
1 height above (upper) ground level
2 height above ground level of assembly (H_a) for the front of the building
3 ground level not relevant for the fronts of the building

Figure 1 — Schematic examples of height above ground level of assembly depending on the different fronts of a building

© ISO 2024 – All rights reserved

Documents
Document Sharing Hub
Full document details: BS ISO 16316:2024

3.16
external emergency exit doorset
panic exit doorset
external doorset in a construction work which separates the exterior climate from the interior of a building, that opens in an emergency situation with one single operation (without a key).

Note 1 to entry: An external emergency exit is usually fitted with panic exit devices (push bars) or emergency exit devices (push to open, lever handle or push pad).

4 Symbols and abbreviated terms

For the purposes of this document, the following symbols and abbreviated terms apply:

DLO	Daylight opening – the width and the height of the visible glass (see Annex F)
G1I	Insulating glass type n°1 for test mock-up examples (see Annex F)
G2	Laminated glass type n°2 for test mock-up examples (see Annex F)
G2I	Insulating glass type n°2 for test mock-up examples (see Annex F)
H.S.	Heat strengthened glass
F.T.	Fully tempered glass
TH-1	Threshold type n°1 for test mock-up examples (see Annex F)
TH-2	Threshold type n°2 for test mock-up examples (see Annex F)
P	Air pressure differential
W	Width of the mock-up examples (see Annex F)
H_{mu}	Height of the mock-up examples (see Annex F)
V	reference wind speed
V_t	Velocity of the wind used in the test, as determined by the procedure of this document

5 Principle and significance

5.1 General

This test method shall be used to determine the windborne debris-resistance of windows, doors or curtain walling. Qualification under this document provides a basis to judge the ability of the fenestration assembly to remain without failure according to Clause 9 during extreme wind events, when they can be impacted by windborne debris. This minimizes the damaging effects of a destructive windstorm on the building interior and reduces the magnitude of internal pressurization and wind-driven rain infiltration.

This test method consists of mounting the test specimen and testing to an appropriate class, by impacting the test specimen with the missile(s) and then applying cyclic pressure differentials (i.e. a cyclic test load) across the test specimen in accordance with a specified test-loading sequence. The condition of the test specimen is observed and measured, and the results are reported.

A missile-propulsion device, an air pressure system and a test chamber are used to model representative conditions that can be representative of windborne debris and pressures in a windstorm event.

The performance determined by this test method relates to the ability of building envelope components to fulfil the pass criteria listed in Clause 9.

© ISO 2024 – All rights reserved

Documents
Document Sharing Hub
Full document details: BS ISO 16316:2024

Classification is intended as a basis for judging the ability of the building envelope assembly to remain essentially without significant openings or holes as the result of a windstorm. Impact by missile(s) and subsequent cyclic static-pressure differentials simulate conditions representative of windborne debris and pressures in a destructive windstorm.

5.2 Significance and use

Structural design for the determination of windborne debris-resistance of windows, doors or curtain walling is based on positive and negative serviceability pressures (see 3.13). Impact resistance of building envelope components is generally performed according to test methods such as ISO 7892, to prove adequacy to different types of impacts, varying the mass of the body (impactor), its nature, drop height, impact location, and impact direction (acting from the outside or inside of the building). ISO 7892 is not developed to estimate the ability to withstand impacts from windborne debris followed by fluctuating pressures that simulate the windstorm environment.

Windstorm damage assessments demonstrated that windborne debris impact and the subsequent exposure to positive and negative pressure caused significant damage to building envelopes in extreme-wind events. The resistance of windows, doors or curtain walling to wind loading after impact depends upon product design, installation, load magnitude and duration.

5.3 Options

This test method can be used:

— either to test the windows (incl. skylights), doors or curtain walling for classification according to 10.3

— or to test the windows (incl. skylights), doors or curtain walling to other conditions without classification as requested by the ordering party, in which case the required information, in accordance with Annex A, shall be provided for the test procedure.

6 Test apparatus

Any equipment capable of performing the test procedure within the allowable tolerances may be used.

6.1 Mounting frame, supporting the outer specimen test frame(s) in a vertical position during testing. The mounting frame shall be either integral with the test chamber or capable of being installed into the test chamber prior to or following missile impact(s). The mounting frame shall be anchored so it does not move when the specimen is impacted. The specifications for the inner and the outer specimen-support frame shall be specified in the testing report.

6.2 Air-pressure cycling test chamber, consisting of an enclosure or box with an opening against which the test specimen is installed. It shall be capable of withstanding the specified cyclic static-pressure differential. The chamber shall be deep enough to avoid contact with the test specimen during pressure cycling. Pressure taps shall be provided to facilitate measurement of the cyclic pressure differential. They shall be located such that the measurements are unaffected by the air supplied to or evacuated from the test chamber or by any other air movements.

6.3 Air-pressure system, consisting of a controllable blower, a compressed-air supply/vacuum system or other suitable system capable of providing the required maximum air-pressure differential (inward and outward acting) across the test specimen. Specified pressure differentials across the test specimen shall be imposed and controlled through any system that subjects the test specimen to the prescribed test-loading program. Examples of suitable control systems include manually operated valves, electrically operated valves or computer-controlled servo-operated valves.

6.4 Air-pressure-measuring apparatus. Pressure differentials across the test specimen shall be measured by an air-pressure-measuring apparatus with an accuracy of ±2 % of its maximum rated capacity, or ±100 Pa, whichever is the lowest, and with a response time of less than 50 ms.

© ISO 2024 – All rights reserved

Documents
Document Sharing Hub
Full document details: BS ISO 16316:2024

EXAMPLE Mechanical pressure gages and electronic pressure transducers are acceptable.

6.5 Missile-propulsion device(s), capable of propelling a missile at a specified speed and orientation towards a specified impact location; see Annex B. The missile shall not be accelerating upon impact due to the force of gravity along a line normal to the specimen.

6.6 Speed-measuring system, capable of measuring missile speeds within the tolerances defined in 8.3.2.

6.7 Missiles

6.7.1 General

Missiles shall be one or more of the following, as appropriate to classification, see 10.2. Any other representative missiles shall have mass, size, shape and impact speed determined by engineering analysis (see Annex G) considering the reference wind speed.

6.7.2 Small-ball missile

A solid steel ball weighing 2 g ±5 %, with an 8 mm nominal diameter, and an impact speed according to Table 1.

6.7.3 Lumber missile

The lumber missile shall be made of pine or fir with a moisture content of 15 % ±4 %, and a cross section of 50 mm x 100 mm with no defects, including knots, splits, checks, shakes, or wane within 30 cm of the impact end, which shall be trimmed (cut in 90° angle).

The lumber missile shall have a mass of between 910 g ± 100 g and 4 100 g ± 100 g and a length between 525 mm ± 100 mm and 4,0 m ± 100 mm and an impact speed according to Table 1.

If required for propulsion, a circular sabot (i.e. circular base plate as represented in Figure 2) having a mass of no more than 200 g may be applied to the trailing edge of the lumber missile. The mass and length of the lumber missile includes the mass and length of the sabot.

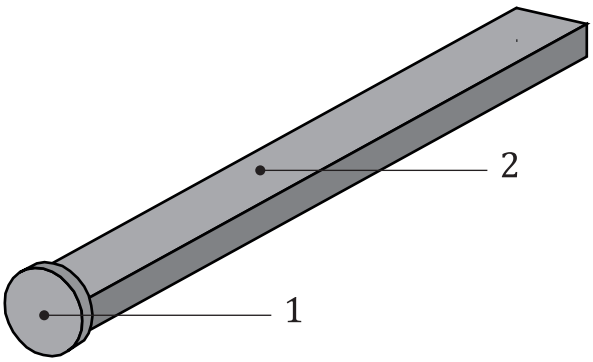

Key

1 (optional) circular sabot (base plate)

2 lumber missile

Figure 2 — Schematic diagram of lumber missile

6.7.4 Other missile

Any other representative missile with mass, size, shape, and impact speed as a function of reference wind speed determined by engineering analysis (see Annex G).

© ISO 2024 – All rights reserved

Documents
Document Sharing Hub
Full document details: BS ISO 16316:2024

6.8 Speed-measuring system. The speed-measuring system shall be calibrated. Calibration shall be performed at the speed-measuring system manufacturer's recommended frequency. The speed measuring system shall be calibrated by at least one of the following methods:

— photographically, using a stroboscope and a still camera;

— photographically, using a high-speed motion-picture or video camera with a frame rate exceeding 500 frames per second capable of producing a clear image and a device that allows single-frame viewing;

— using gravity to accelerate a free-falling object having negligible air drag through the timing system and comparing measured and theoretical elapsed times.

6.9 Pressure transducers. Electronic pressure transducers shall be calibrated at six-month intervals using a standardized calibrating system or a manometer readable to 10 Pa (1 mm of water).

6.10 Manometers. The calibration of manometers is normally not required, provided that the instruments are used at a temperature near their design temperature.

7 Test specimens

7.1 General

The test specimens shall consist of the entire fenestration assembly and contain all devices used to resist wind and windborne debris (e.g. windstorm protective systems tested in combination with the specimen).

All parts of the test specimen shall be full size, as specified for actual use, using the identical materials, details, and methods of construction. Mullions shall be tested as part of the test sample and true glazing bars shall be tested as part of the test samples.

7.2 Test specimen size

The test specimen to be tested shall have nominal dimensions representative of the commercial production.

The size of the test specimen shall be determined by the ordering party. All components of each test specimen shall be full size.

Where it is impractical to test the entire fenestration assembly such as curtain walling and heavy commercial assemblies, test the largest size of each type of panel as required by the ordering party, to qualify the entire assembly. When the smaller panels exceed a 50 % reduction in their individual length size (e.g. height or width) with reference to the panel that has been tested for certification purposes, a second test should be conducted. The second test shall check that the higher stiffness of these smaller building components is not influencing their impact performances when it comes to wind-borne debris simulation.

7.3 Test specimen

Individual windows (including skylights), doors or curtain walling, should be tested separately (see Figure 4 and Figure 6).

Windows (including skylights), doors or curtain walling intended to be installed combined together shall be tested by joining at least three lites into one mounting frame, separated only by the mullions (see Figure 5 and Figure 7). These mullions should be representative of the mullions of the building envelope to be tested.

Openable elements (and windstorm protective devices affecting their operation) shall be opened and closed twice before testing.

When windstorm protective systems are intended to be installed combined with windows (including skylights), doors or curtain walling, the deflection after the impact testing shall be verified. This parameter is used to establish the minimum design installation distance of these building components from the

© ISO 2024 – All rights reserved

Documents
Document Sharing Hub
Full document details: BS ISO 16316:2024

internal building envelope to be protected. External windstorm protective systems maximum deflection should guarantee a minimum distance of these building components from the internal building envelope.

If windows (including skylights), doors or curtain walling are intended to be installed combined with windstorm protective systems, the assembly shall be tested by joining at least three lites into one mounting frame, separated only by the mullions.

7.4 Order of testing

Test specimens passing the acceptance criteria of the lumber-missile or small-ball-missile impact test shall be submitted for the air-pressure-cycle test.

8 Test procedure

8.1 General

The test procedure shall follow Annex D.

Test specimen shall be tested to a class appropriate to its use. The following test information shall be provided:

a) missile type;

b) maximum specified air-pressure differential (see 8.4.3).

If the test specimen is tested at other conditions, then the relevant information shall be provided in accordance with Annex A.

8.2 Preparation

8.2.1 General

Remove from the test specimen any sealing or construction material that is not intended to be used when the unit is installed in or on a building. The test specimen shall not be removed from the mounting frame at any time during the test sequence.

8.2.2 Installation

Support and secure the test specimen into the mounting frame in a vertical position using the same number and type of anchors normally used for product installation as defined by the manufacturer or as required for a specific project. If this is impractical, install the test specimen with the same number of equivalent fasteners located in the same manner as the intended installation. This test shall not be used to evaluate anchorage of curtain walling and heavy commercial assemblies. In those cases, the specimen shall be securely anchored to facilitate testing.

8.2.3 Conditioning

Condition the specimens separately for at least 4 h within a temperature range of 15 °C to 35 °C. For specimens tested in different temperature conditions, those conditions shall be agreed by the ordering party.

8.2.4 Missile impact

Take the following steps to prepare the specimen for missile impact.

— Secure the specimen and mounting frame such that the missile (lumber missile or small-ball missile) impacts the exterior side of the specimen as installed.

— Locate the end of the propulsion device from which the missile exits at least 1,5 times the length of the missile from the specimen. This distance shall be no less than 1,80 m.

© ISO 2024 – All rights reserved

Documents
Document Sharing Hub
Full document details: BS ISO 16316:2024

— Set up appropriate signal/warning devices to prevent test and/or other personnel from coming between the propulsion device and the test specimen during testing.

— Weight each missile prior to starting the test.

— Load the missile into the propulsion device.

— Reset the speed-measuring system.

— Align the missile-propulsion device such that the specified missile impacts the test specimen at the specified location.

8.3 Missile impact test

8.3.1 Projectile descriptions

Propel the missile at the specified impact speed specified in Table 1.

Table 1 — Applicable missiles

Missile type	Missile	Impact speed (m/s)
A	(2 ± 0,1) g (small steel ball)	40
B	(910 ± 100) g (small lumber)	15
C	(2 050 ± 100) g (small lumber)	12
D	(4 100 ± 100) g (medium lumber)	15
E	(4 100 ± 100) g (medium lumber)	24
NOTE 1 Impact speed is given here to two significant figures (see ISO 16932:2020, Table 1). NOTE 2 Missile weight is given to one significant figure (with possible uncertainty given to one significant figure) (see ISO 16932:2020, Table 1).		

8.3.2 Impact-speed tolerance

The measured missile speed shall be within the following respective tolerances at the chosen measuring point after the missile leaves the propulsion device:

a) ±2 % specified speed for lumber missile impact test;

b) ±1 % specified speed for small-ball missile impact test.

8.3.3 Impact angle

For missiles having a longitudinal axis, on impact the longitudinal axis of the missile shall be within ±5° of a line normal to the specimen at the specified impact point. For each missile, the allowable deviation of launching angle is shown in Figure 3.

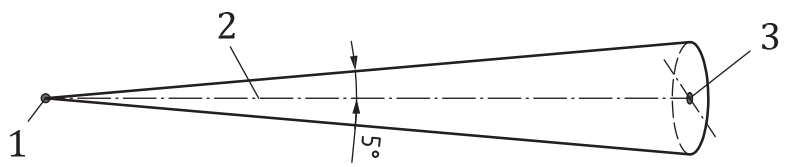

Key

1 starting point of the missile

2 normal line of the testing face

3 objective/ striking point

Figure 3 — Allowable launching angle deviation

© ISO 2024 – All rights reserved

Documents
Document Sharing Hub
Full document details: BS ISO 16316:2024

8.3.4 Impact location

8.3.4.1 Lumber-missile test

Impact each test specimen once (in Figure 4, key I), as shown in Figure 4.

a) Impact one specimen with the missile within a 65 mm radius circle at the centre of specimen.

b) Impact a different specimen with the missile within a 65 mm radius circle with the centre located 150 mm from supporting members at a corner.

c) Impact the remaining specimen with the missile within a 65 mm radius circle having its centre located 150 mm from supporting members at a diagonally opposite corner.

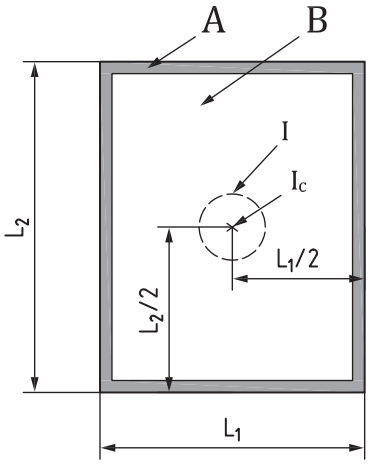

a) Specimen 1: impact area of wood lumber missile impact test for individual windows (incl. skylights), doors or curtain walling tested separately

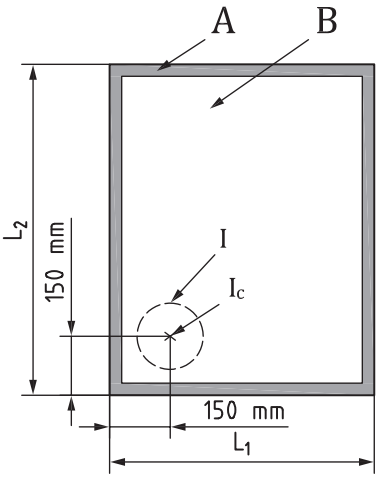

b) Specimen 2: impact area of wood lumber missile impact test for individual windows (incl. skylights), doors or curtain walling tested separately

© ISO 2024 – All rights reserved

Documents
Document Sharing Hub
Full document details: BS ISO 16316:2024

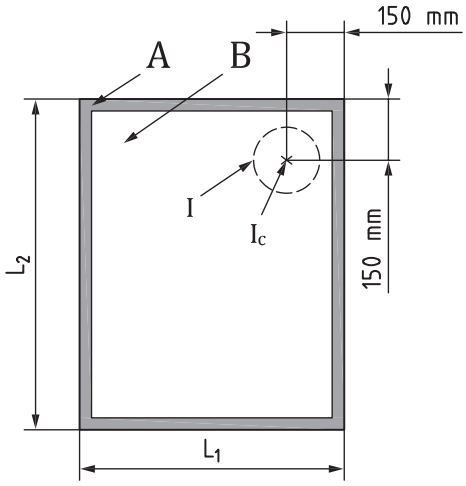

c) Specimen 3: impact area of wood lumber missile impact test for individual windows (incl. skylights), doors or curtain walling tested separately

Key

I impact area of each specimen

I_c centre of the impact area

L_1 width of each specimen

L_2 height of each specimen

A frame of the specimen

B panel (glazed or opaque) of the specimen

Figure 4 — Impact area of wood lumber missile impact test for individual windows (incl. skylights), doors or curtain walling tested separately

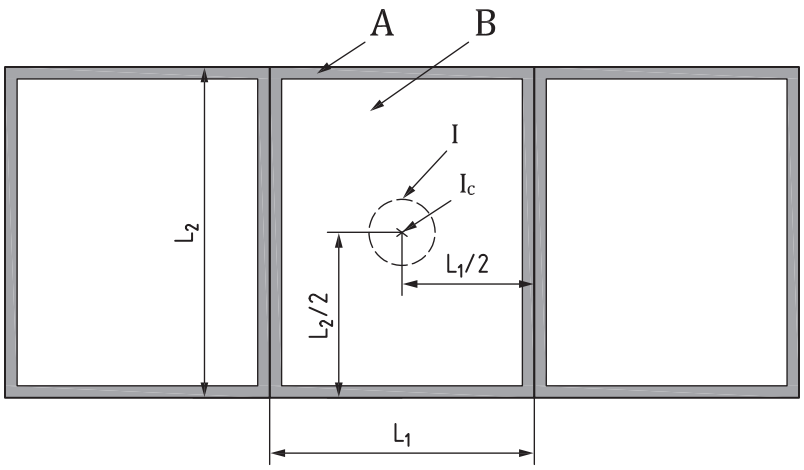

a) Specimen 1: impact area of wood lumber missile impact test for windows (incl. skylights), doors or curtain walling intended to be installed combined together and tested by joining at least three lites into one mounting frame

© ISO 2024 – All rights reserved

Documents
Document Sharing Hub
Full document details: BS ISO 16316:2024

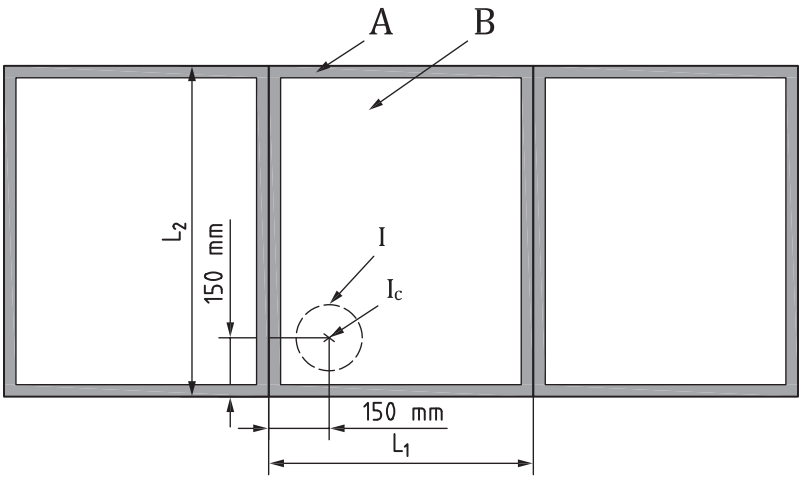

b) Specimen 2: impact area of wood lumber missile impact test for windows (incl. skylights), doors or curtain walling intended to be installed combined together and tested by joining at least three lites into one mounting frame

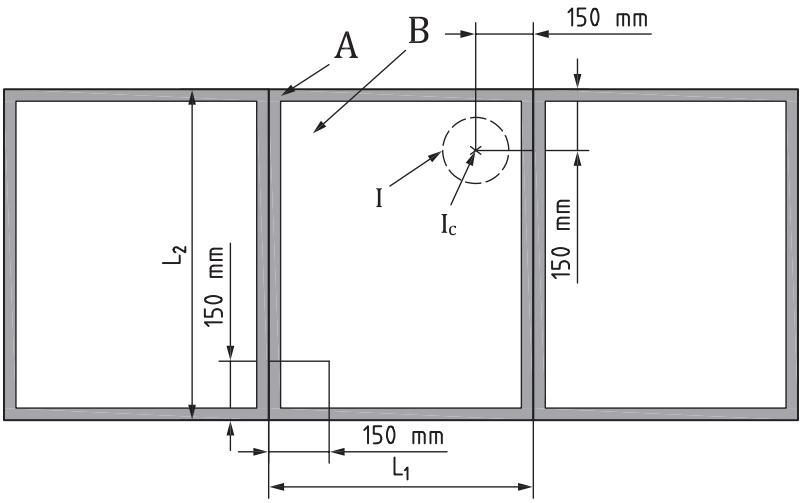

c) Specimen 3: impact area of wood lumber missile impact test for windows (incl. skylights), doors or curtain walling intended to be installed combined together and tested by joining at least three lites into one mounting frame

Key

I impact area of each specimen

I_c centre of the impact area

L_1 width of each specimen

L_2 height of each specimen

A frame of the specimen

B panel (glazed or opaque) of the specimen

Figure 5 — Impact area of wood lumber missile impact test for windows (incl. skylights), doors or curtain walling intended to be installed combined together and tested by joining at least three lites into one mounting frame

© ISO 2024 – All rights reserved

Documents
Document Sharing Hub
Full document details: BS ISO 16316:2024

8.3.4.2 Small-ball-missile test

Impact each test specimen three times (in Figure 6: I1, I2 and I3) with 10 steel balls each as shown in Figure 6. Each specimen shall receive a total of 30 impacts from steel balls.

a) The corner-impact locations shall be entirely within a 250 mm radius circle having its centre located 275 mm from the corner edges.

b) The edge-impact locations shall be entirely within a 250 mm radius circle having its centre located at 275 mm from the edges and located at the centre line between two corners.

c) The centre-impact location shall be entirely within a 250 mm radius circle having its centre located at the horizontal and vertical centre line of the specimen.

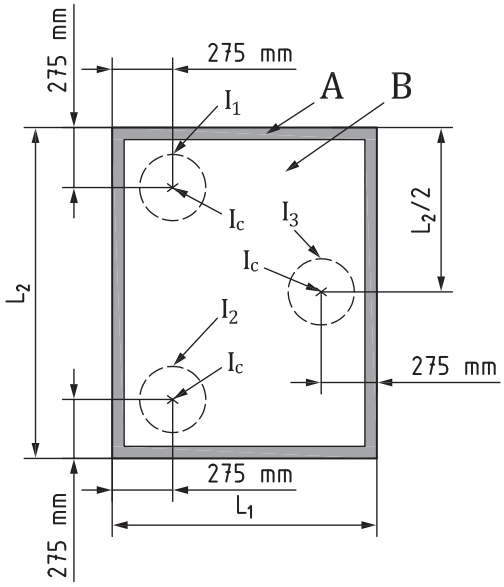

a) Specimen 1: impact area of steel ball impact test for individual windows (incl. skylights), doors or curtain walling tested separately

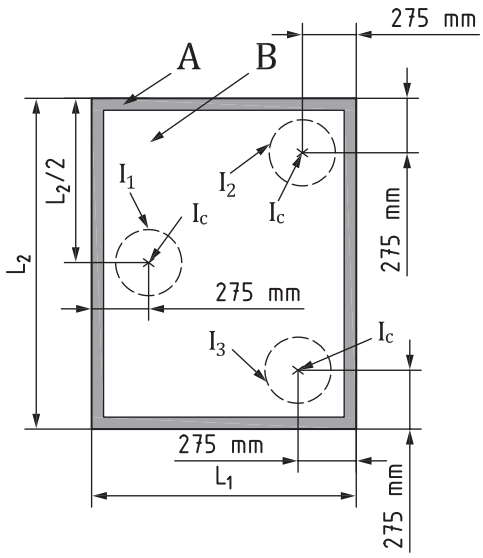

b) Specimen 2: impact area of steel ball impact test for individual windows (incl. skylights), doors or curtain walling tested separately

© ISO 2024 – All rights reserved

Documents
Document Sharing Hub
Full document details: BS ISO 16316:2024

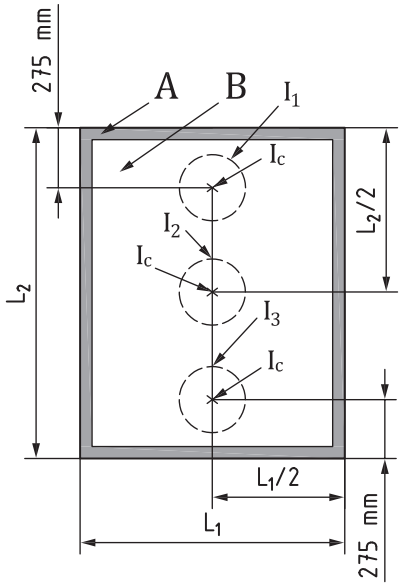

c) Specimen 3: impact area of steel ball impact test for individual windows (incl. skylights), doors or curtain walling tested separately

Key

I_1 impact area n°1 of each specimen
I_2 impact area n°2 of each specimen
I_3 impact area n°3 of each specimen
I_c centre of the impact area
L_1 width of each specimen
L_2 height of each specimen
A frame of the specimen
B panel (glazed or opaque) of the specimen

Figure 6 — Impact area of steel ball impact test for individual windows (incl. skylights), doors or curtain walling tested separately

© ISO 2024 – All rights reserved

Documents
Document Sharing Hub
Full document details: BS ISO 16316:2024

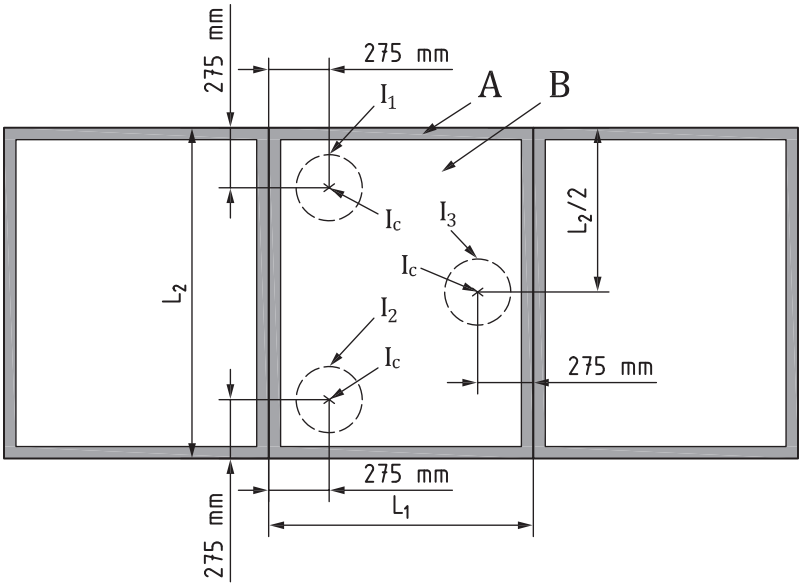

a) Specimen 1: impact area of steel ball impact test for windows (incl. skylights), doors or curtain walling intended to be installed combined together and tested by joining at least three lites into one mounting frame

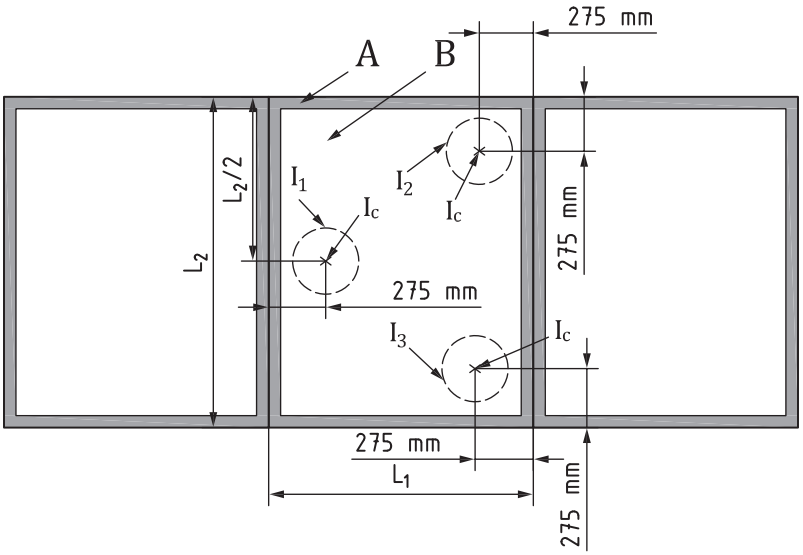

b) Specimen 2: impact area of steel ball impact test for windows (incl. skylights), doors or curtain walling intended to be installed combined together and tested by joining at least three lites into one mounting frame

© ISO 2024 – All rights reserved

Documents
Document Sharing Hub
Full document details: BS ISO 16316:2024