BS ISO 16462:2014

BSI Standards Publication

Cubic boron nitride inserts, tipped or solid — Dimensions, types

bsi.

...making excellence a habit.™

Document Sharing Hub

National foreword

This British Standard is the UK implementation of ISO 16462:2014. It supersedes BS ISO 16462:2004 which is withdrawn.

The UK participation in its preparation was entrusted to Technical Committee MTE/18, Tools tips and inserts for cutting applications.

A list of organizations represented on this committee can be obtained on request to its secretary.

This publication does not purport to include all the necessary provisions of a contract. Users are responsible for its correct application.

© The British Standards Institution 2014.
Published by BSI Standards Limited 2014

ISBN 978 0 580 83606 0
ICS 25.100.01

Compliance with a British Standard cannot confer immunity from legal obligations.

This British Standard was published under the authority of the Standards Policy and Strategy Committee on 31 May 2014.

Amendments/corrigenda issued since publication

Date	Text affected

Documents
Document Sharing Hub

Full document details: BS ISO 16462:2014

INTERNATIONAL STANDARD

ISO 16462

Second edition
2014-06-01

Cubic boron nitride inserts, tipped or solid — Dimensions, types

Plaquettes en nitrure de bore cubique, brasées ou monobloc — Dimensions, types

Reference number
ISO 16462:2014(E)

Documents
Document Sharing Hub

© ISO 2014

Full document details: BS ISO 16462:2014

COPYRIGHT PROTECTED DOCUMENT

© ISO 2014

All rights reserved. Unless otherwise specified, no part of this publication may be reproduced or utilized otherwise in any form or by any means, electronic or mechanical, including photocopying, or posting on the internet or an intranet, without prior written permission. Permission can be requested from either ISO at the address below or ISO's member body in the country of the requester.

ISO copyright office
Case postale 56 • CH-1211 Geneva 20
Tel. + 41 22 749 01 11
Fax + 41 22 749 09 47
E-mail copyright@iso.org
Web www.iso.org

Published in Switzerland

© ISO 2014 – All rights reserved

Documents
Document Sharing Hub

Full document details: BS ISO 16462:2014

Contents

Page

Foreword ... **iv**

1 Scope ... **1**

2 Normative references ... **1**

3 Insert shapes and design ... **1**
3.1 Insert shapes ... 1
3.2 Normal clearance α_n ... 1
3.3 Cutting edge corner ... 1
3.4 Tolerance class ... 1
3.5 Design of cutting edges ... 2
3.6 Insert type ... 2

4 Designation ... **2**
4.1 General ... 2
4.2 Designation of inserts for turning ... 2
4.3 Designation of a tipped insert for milling ... 2

5 Dimensions ... **3**
5.1 Insert shape T with fixing hole (inserts for turning) ... 3
5.2 Insert shape S with fixing hole (inserts for turning) ... 4
5.3 Insert shape C with fixing hole (inserts for turning) ... 5
5.4 Insert shape D with fixing hole (inserts for turning) ... 6
5.5 Insert shape V with fixing hole (inserts for turning) ... 7
5.6 Insert shape S with fixing hole (inserts for milling) ... 8
5.7 Insert shape C with fixing hole (inserts for milling) ... 9
5.8 Insert shapes C, R, S, and T without fixing hole (inserts for turning) ... 9
5.9 Insert shapes S and T without fixing hole (inserts for milling) ... 11
5.10 Insert shapes S and T without fixing hole (inserts for milling) ... 12
5.11 Insert shape W with fixing hole (inserts for turning) ... 13
5.12 Insert shape W without fixing hole (inserts for turning) ... 14

6 Cutting edge length, l_1, of tipped inserts ... **15**
6.1 General ... 15
6.2 Inserts with radius ... 15
6.3 Inserts with wiper edge ... 15

7 Base material, cutting material ... **16**

8 Measurements ... **16**

9 Marking ... **16**

Annex A (informative) **Relationship between designations in ISO 16462 and ISO/TS 13399-2** ... **17**

© ISO 2014 – All rights reserved

Documents
Document Sharing Hub
Full document details: BS ISO 16462:2014

Foreword

ISO (the International Organization for Standardization) is a worldwide federation of national standards bodies (ISO member bodies). The work of preparing International Standards is normally carried out through ISO technical committees. Each member body interested in a subject for which a technical committee has been established has the right to be represented on that committee. International organizations, governmental and non-governmental, in liaison with ISO, also take part in the work. ISO collaborates closely with the International Electrotechnical Commission (IEC) on all matters of electrotechnical standardization.

The procedures used to develop this document and those intended for its further maintenance are described in the ISO/IEC Directives, Part 1. In particular the different approval criteria needed for the different types of ISO documents should be noted. This document was drafted in accordance with the editorial rules of the ISO/IEC Directives, Part 2 (see www.iso.org/directives).

Attention is drawn to the possibility that some of the elements of this document may be the subject of patent rights. ISO shall not be held responsible for identifying any or all such patent rights. Details of any patent rights identified during the development of the document will be in the Introduction and/or on the ISO list of patent declarations received (see www.iso.org/patents).

Any trade name used in this document is information given for the convenience of users and does not constitute an endorsement.

For an explanation on the meaning of ISO specific terms and expressions related to conformity assessment, as well as information about ISO's adherence to the WTO principles in the Technical Barriers to Trade (TBT) see the following URL: Foreword - Supplementary information

The committee responsible for this document is ISO/TC 29, *Small Tools*, Subcommittee SC 9, *Tools with cutting edges made of hard cutting materials*.

This second edition cancels and replaces the first edition (ISO 16462:2004), of which it constitutes a minor revision.

© ISO 2014 – All rights reserved
Documents
Document Sharing Hub
Full document details: BS ISO 16462:2014

INTERNATIONAL STANDARD ISO 16462:2014(E)

Cubic boron nitride inserts, tipped or solid — Dimensions, types

1 Scope

This International Standard applies to inserts with insert shapes in accordance with ISO 883, ISO 3364, ISO 3365, and ISO 6987, tipped with cubic boron nitride (BL, BH, BC) or made of solid cubic boron nitride (BL, BH, BC).

2 Normative references

The following documents, in whole or in part, are normatively referenced in this document and are indispensable for its application. For dated references, only the edition cited applies. For undated references, the latest edition of the referenced document (including any amendments) applies.

ISO 513, *Classification and application of hard cutting materials for metal removal with defined cutting edges — Designation of the main groups and groups of application*

ISO 883, *Indexable hardmetal (carbide) inserts with rounded corners, without fixing hole — Dimensions*

ISO 1832, *Indexable inserts for cutting tools — Designation*

ISO 3364, *Indexable hardmetal (carbide) inserts with rounded corners, with cylindrical fixing hole — Dimensions*

ISO 3365, *Indexable hardmetal (carbide) inserts with wiper edges, without fixing hole — Dimensions*

ISO 6987, *Indexable hard material inserts with rounded corners, with partly cylindrical fixing hole — Dimensions*

3 Insert shapes and design

3.1 Insert shapes

Triangular (T), square (S), rhombic 80° (C), 55° (D) and 35° (V), round (R), and trigon (W).

3.2 Normal clearance α_n

Normal clearance 0° (N), 5° (B), 7° (C), and 11° (P).

3.3 Cutting edge corner

Inserts for turning with corner radius r_ε 0,2 mm, 0,4 mm, 0,8 mm, 1,2 mm, and 1,6 mm.

Inserts for milling with wiper edge.

NOTE The design of non-tipped corners is optional.

3.4 Tolerance class

Tolerance class in accordance with ISO 1832 shall be applied. In Tables 1 to 12, this position is shown with a dot (•).

© ISO 2014 – All rights reserved

Documents
Document Sharing Hub
Full document details: BS ISO 16462:2014

3.5 Design of cutting edges

Any design shall be indicated in the designation (see ISO 1832).

3.6 Insert type

The styles of tipped or solid cutting edges in accordance with ISO 1832 shall be applied.

4 Designation

4.1 General

The designation of inserts tipped or solid with cubic boron nitride (BL, BH, BC) is based on ISO 1832. The letter symbol for the cutting edge condition and the letter symbol for the insert type shall be indicated in the designation in each case.

Designations contained in 4.2 and 4.3 are examples of the use of designations in accordance with ISO 1832.

4.2 Designation of inserts for turning

4.2.1 Solid insert (S)

Designation of a rhombic insert with included angle ε_r = 80° (C), normal clearance α_n = 0° (N), with tolerance class M, without chip breakers and without fixing hole (N), with side length l = 9,67 mm (09), thickness s = 3,18 mm (03), corner radius r_ε = 0,8 mm (08), with chamfered and rounded cutting edges (S), insert type solid (S), cutting material in accordance with ISO 513 (e.g. BL05):

Insert CNMN 090308S — S — BL05 — ....

NOTE BL05 is optional in accordance with ISO 1832, designation symbol 13.

4.2.2 Insert, tipped — full thickness — one corner (T)

Designation of a rhombic insert with included angle ε_r = 55° (D), normal clearance α_n = 0° (N), with tolerance class M, without chip breakers and with cylindrical fixing hole (A), with side length l = 15,5 mm (15), thickness s = 4,76 mm (04), corner radius r_ε = 0,8 mm (08), with chamfered and rounded cutting edges (S), tipped — full thickness — one corner (T), long (L), cutting material in accordance with ISO 513 (e.g. BL05):

Insert DNMA 150408S — TL — BL05 — ....

NOTE BL05 is optional in accordance with ISO 1832, designation symbol 13.

4.3 Designation of a tipped insert for milling

Designation of a square insert (S) with normal clearance α_n = 7° (C), with tolerance class G, without chip breakers and with fixing hole (W), with side length l = 12,7 mm (12), thickness s = 4,76 mm (04), cutting edge angle κ_r = 75° (E), normal clearance at wiper edge α = 15° (D), right-hand type (R), tipped — one side — one corner (A), long (L), cutting material in accordance with ISO 513 (e.g. BL05):

Insert SCGW 1204EDR — AL — BL05 — ....

NOTE BL05 is optional in accordance with ISO 1832, designation symbol 13.

© ISO 2014 – All rights reserved
Documents
Document Sharing Hub
Full document details: BS ISO 16462:2014

5 Dimensions

5.1 Insert shape T with fixing hole (inserts for turning)

See Figure 1 and Table 1.

NOTE For the dimensions of l_1, see Table 13.

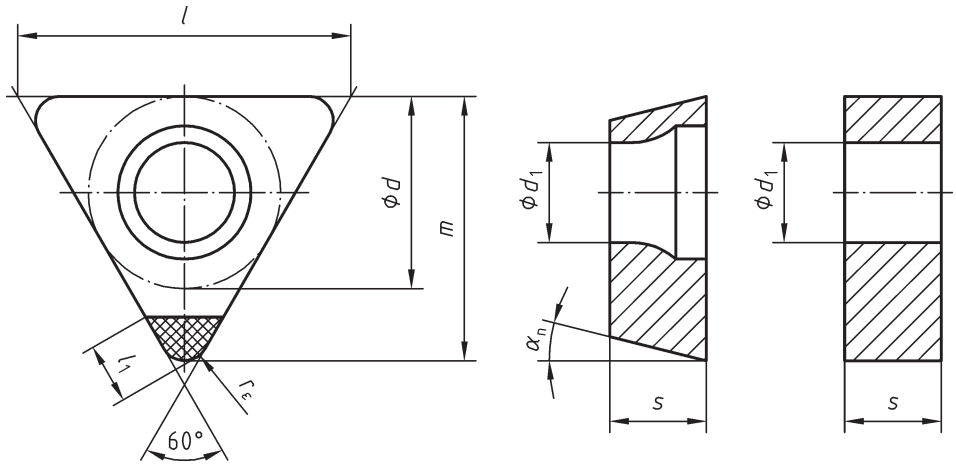

Figure 1

Table 1

Designation	d	d_1	l ≈	m	s	α_n	r_ε
TC•W 09 02 02S	5,56	2,5	9,63	8,137	2,38	7°	0,2
TC•W 09 02 04S	5,56	2,5	9,63	7,943	2,38	7°	0,4
TC•W 09 02 08S	5,56	2,5	9,63	7,541	2,38	7°	0,8
TC•W 11 02 02S	6,35	2,8	11	9,322	2,38	7°	0,2
TC•W 11 02 04S	6,35	2,8	11	9,128	2,38	7°	0,4
TC•W 11 02 08S	6,35	2,8	11	8,731	2,38	7°	0,8
TC•W 16 T3 02S	9,525	4,4	16,5	14,084	3,97	7°	0,2
TC•W 16 T3 04S	9,525	4,4	16,5	13,891	3,97	7°	0,4
TC•W 16 T3 08S	9,525	4,4	16,5	13,494	3,97	7°	0,8
TC•W 16 T3 12S	9,525	4,4	16,5	13,097	3,97	7°	1,2
TC•W 16 T3 16S	9,525	4,4	16,5	12,700	3,97	7°	1,6
TN•A 11 03 02S	6,35	2,26	11	9,322	3,18	0°	0,2
TN•A 11 03 04S	6,35	2,26	11	9,128	3,18	0°	0,4
TN•A 11 03 08S	6,35	2,26	11	8,731	3,18	0°	0,8
TN•A 16 04 04S	9,525	3,81	16,5	13,891	4,76	0°	0,4
TN•A 16 04 08S	9,525	3,81	16,5	13,494	4,76	0°	0,8
TN•A 16 04 12S	9,525	3,81	16,5	13,097	4,76	0°	1,2
TN•A 16 04 16S	9,525	3,81	16,5	12,700	4,76	0°	1,6
TP•W 08 02 02S	4,763	2,3	8,2	6,945	2,38	11°	0,2
TP•W 08 02 04S	4,763	2,3	8,2	6,747	2,38	11°	0,4
TP•W 08 02 08S	4,763	2,3	8,2	6,350	2,38	11°	0,8
TP•W 09 02 02S	5,56	2,5	9,63	8,137	2,38	11°	0,2

© ISO 2014 – All rights reserved

AVA Documents Document Sharing Hub
Full document details: BS ISO 16462:2014