BS ISO 16625:2025

BSI Standards Publication

Cranes and hoists — Selection of wire ropes, drums and sheaves

Documents
Document Sharing Hub

Full document details: BS ISO 16625:2025

National foreword

This British Standard is the UK implementation of ISO 16625:2025. It supersedes BS ISO 16625:2013, which is withdrawn.

The UK participation in its preparation was entrusted to Technical Committee MHE/3/1, Crane design.

A list of organizations represented on this committee can be obtained on request to its committee manager.

Contractual and legal considerations

This publication has been prepared in good faith, however no representation, warranty, assurance or undertaking (express or implied) is or will be made, and no responsibility or liability is or will be accepted by BSI in relation to the adequacy, accuracy, completeness or reasonableness of this publication. All and any such responsibility and liability is expressly disclaimed to the full extent permitted by the law.

This publication is provided as is, and is to be used at the recipient's own risk.

The recipient is advised to consider seeking professional guidance with respect to its use of this publication.

This publication is not intended to constitute a contract. Users are responsible for its correct application.

© The British Standards Institution 2025
Published by BSI Standards Limited 2025

ISBN 978 0 539 20660 9

ICS 53.020.30

Compliance with a British Standard cannot confer immunity from legal obligations.

This British Standard was published under the authority of the Standards Policy and Strategy Committee on 28 February 2025.

Amendments/corrigenda issued since publication

Date	Text affected

Documents
Document Sharing Hub

Full document details: BS ISO 16625:2025

International Standard

ISO 16625

Cranes and hoists — Selection of wire ropes, drums and sheaves

Appareils de levage à charge suspendue et treuils — Choix des câbles, tambours et poulies

Second edition
2025-02

Reference number
ISO 16625:2025(en)

© ISO 2025

Documents
Document Sharing Hub

Full document details: BS ISO 16625:2025

COPYRIGHT PROTECTED DOCUMENT

© ISO 2025

All rights reserved. Unless otherwise specified, or required in the context of its implementation, no part of this publication may be reproduced or utilized otherwise in any form or by any means, electronic or mechanical, including photocopying, or posting on the internet or an intranet, without prior written permission. Permission can be requested from either ISO at the address below or ISO's member body in the country of the requester.

ISO copyright office
CP 401 • Ch. de Blandonnet 8
CH-1214 Vernier, Geneva
Phone: +41 22 749 01 11
Email: copyright@iso.org
Website: www.iso.org

Published in Switzerland

Documents
Document Sharing Hub
Full document details: BS ISO 16625:2025

Contents

Page

Foreword ... **iv**

1 Scope ... **1**

2 Normative references ... **1**

3 Terms, definitions and symbols ... **2**
3.1 Terms and definitions ... 2
3.2 Symbols ... 2

4 Running ropes and stationary ropes ... **5**
4.1 General ... 5
4.2 Discard criteria ... 5
4.3 Rope and rope terminations ... 6

5 Proof of competence of running ropes ... **6**
5.1 Proof of static strength ... 6
5.1.1 General ... 6
5.1.2 Vertical hoisting of loads ... 6
5.1.3 General rope drives ... 12
5.1.4 Limit design rope force ... 15
5.2 Proof of fatigue strength ... 16
5.2.1 General ... 16
5.2.2 Design rope force ... 19
5.2.3 Limit design rope force ... 22
5.3 Proof of competence for multilayer spooling ... 27
5.3.1 General ... 27
5.3.2 Vertical hoisting of loads ... 28
5.3.3 General rope drive ... 28
5.3.4 Limit design rope force ... 29

6 Proof of competence of stationary ropes ... **30**
6.1 Proof of static strength ... 30
6.1.1 General ... 30
6.1.2 Limit design rope force ... 30
6.2 Proof of fatigue strength ... 31
6.2.1 General ... 31
6.2.2 Limit design rope force ... 31

Annex A (normative) **Number of relevant bending cycles** ... **33**

Annex B (informative) **Determination of the maximum tensile force in the ropes of multi-rope grabs (holding and closing)** ... **45**

Annex C (informative) **Comparison of minimum design factor according to ISO 16625:2013 and safety level according current version** ... **46**

Annex D (informative) **Selection of a rope by minimum design factor Z_p** ... **50**

Annex E (informative) **Assumed number of hoist ropes l_r during the design life of a crane** ... **52**

Annex F (informative) **Other rope-related design and rope selection aspects** ... **54**

Bibliography ... **66**

© ISO 2025 – All rights reserved

Documents
Document Sharing Hub
Full document details: BS ISO 16625:2025

Foreword

ISO (the International Organization for Standardization) is a worldwide federation of national standards bodies (ISO member bodies). The work of preparing International Standards is normally carried out through ISO technical committees. Each member body interested in a subject for which a technical committee has been established has the right to be represented on that committee. International organizations, governmental and non-governmental, in liaison with ISO, also take part in the work. ISO collaborates closely with the International Electrotechnical Commission (IEC) on all matters of electrotechnical standardization.

The procedures used to develop this document and those intended for its further maintenance are described in the ISO/IEC Directives, Part 1. In particular the different approval criteria needed for the different types of ISO documents should be noted. This document was drafted in accordance with the editorial rules of the ISO/IEC Directives, Part 2 (see www.iso.org/directives).

ISO draws attention to the possibility that the implementation of this document may involve the use of (a) patent(s). ISO takes no position concerning the evidence, validity or applicability of any claimed patent rights in respect thereof. As of the date of publication of this document, ISO had not received notice of (a) patent(s) which may be required to implement this document. However, implementers are cautioned that this may not represent the latest information, which may be obtained from the patent database available at www.iso.org/patents. ISO shall not be held responsible for identifying any or all such patent rights.

Any trade name used in this document is information given for the convenience of users and does not constitute an endorsement.

For an explanation on the meaning of ISO specific terms and expressions related to conformity assessment, as well as information about ISO's adherence to the World Trade Organization (WTO) principles in the Technical Barriers to Trade (TBT) see the following URL: www.iso.org/iso/foreword.html.

This document was prepared by Technical Committee ISO/TC 96, *Cranes*, Subcommittee SC 3, *Selection of ropes.*

This second edition cancels and replaces the first edition (ISO 16625:2013), which has been technically revised.

The main changes are as follows:

— rope selection has been based on working cycles as opposed to the previous time-based concept;

— different proofs of competence for running ropes (static, fatigue, multilayer spooling) and stationary ropes (static, fatigue) have been incorporated;

— the substantial innovation of this document lies in a new mathematical approach for the proof of fatigue strength of running steel wire ropes. A new reference point has been introduced as a characteristic value for the fatigue strength, from which the S-N curves of the fatigue strength of steel wire ropes at different D/d-ratios are described;

— additional annexes have been introduced:

  — Annex A (normative) Number of relevant bending cycles;

  — Annex B (informative) Determination of the maximum tensile force in the ropes of multi-rope grabs (holding and closing);

  — Annex C (informative) Comparison of the minimum design factor according to ISO 16625:2013 and safety level according current version;

  — Annex D (informative) Selection of a rope by minimum design factor Z_p ;

  — Annex E (informative) Assumed number of hoist ropes $\boldsymbol{l}_r$ during life of a crane.

This document is intended to be used together with the ISO 4301-1 or other applicable part of the ISO 4301 series, ISO 4309, ISO 8686-1 or applicable part of the ISO 8686 series.

© ISO 2025 – All rights reserved

Documents
Document Sharing Hub
Full document details: BS ISO 16625:2025

Any feedback or questions on this document should be directed to the user's national standards body. A complete listing of these bodies can be found at www.iso.org/members.html.

© ISO 2025 – All rights reserved

Documents
Document Sharing Hub
Full document details: BS ISO 16625:2025

Documents
Document Sharing Hub

Cranes and hoists — Selection of wire ropes, drums and sheaves

1 Scope

This document provides a proof of competence and criteria for the selection of steel wire ropes used in cranes as defined in ISO 4306-1.

The influence of the geometry of the rope drive, as well as drum and sheave geometry, are incorporated in the proof of competence.

This document does not apply to fibre ropes.

2 Normative references

The following documents are referred to in the text in such a way that some or all of their content constitutes requirements of this document. For dated references, only the edition cited applies. For undated references, the latest edition of the referenced document (including any amendments) applies.

ISO 2408, *Steel wire ropes — Requirements*

ISO 4301-1, *Cranes — Classification — Part 1: General*

ISO 4306-1, *Cranes — Vocabulary — Part 1: General*

ISO 4309, *Cranes — Wire ropes — Care and maintenance, inspection and discard*

ISO 8686-1:2012, *Cranes — Design principles for loads and load combinations — Part 1: General*

ISO 8686-2, *Cranes — Design principles for loads and load combinations — Part 2: Mobile cranes*

ISO 8686-3, *Cranes — Design principles for loads and load combinations — Part 3: Tower cranes*

ISO 8686-4, *Cranes — Design principles for loads and load combinations — Part 4: Jib cranes*

ISO 8686-5, *Cranes — Design principles for loads and load combinations — Part 5: Overhead travelling and portal bridge cranes*

ISO 8793, *Steel wire ropes — Ferrule-secured eye terminations*

ISO 17558, *Steel wire ropes — Socketing procedures — Molten metal and resin socketing*

ISO 17893, *Steel wire ropes — Vocabulary, designation and classification*

ISO 20332, *Cranes — Proof of competence of steel structures*

EN 13411-3, *Terminations for steel wire ropes — Safety — Part 3: Ferrules and ferrule-securing*

EN 13411-4, *Terminations for steel wire ropes — Safety — Part 4: Metal and resin socketing*

EN 13411-6, *Terminations for steel wire ropes — Safety — Part 6: Asymmetric wedge sockets*

EN 13411-8, *Terminations for steel wire ropes — Safety — Part 8: Swage Terminals and Swaging*

© ISO 2025 – All rights reserved

Documents
Document Sharing Hub
Full document details: BS ISO 16625:2025

3 Terms, definitions and symbols

3.1 Terms and definitions

For the purposes of this document, the terms and definitions given in ISO 4301-1, ISO 4306-1, ISO 17893 and the following apply.

ISO and IEC maintain terminology databases for use in standardization at the following addresses:

— ISO Online browsing platform: available at https://www.iso.org/obp

— IEC Electropedia: available at https://www.electropedia.org/

3.1.1
running rope
rope which is wound on and off a drum and bent over sheaves and/or drums, therefore stressed mainly by bending and secondly by tension

3.1.2
stationary rope
rope fixed at both ends, primarily under tensile load, and which is not subject on coiling (winding) on a drum or over a sheave

3.1.3
design life
estimation of the intended period of use for a crane, or component based on its original design specification and taking into consideration the load cycles and load spectrum expected during its intended usage

Note 1 to entry: According to ISO 4301-1, a rope is considered to be a component in this document.

[SOURCE: ISO 12482:2014, 3.2, modified]

3.1.4
work cycle
operating sequence starting from hoisting a load, transferring the load, lowering and grounding the load, detaching the load and moving the unloaded load lifting attachment back to a starting position ready to hoist another load

[SOURCE: ISO 12482:2014, 3.6]

3.1.5
rope bending diameter
diameter of the axis of the rope in the state when bent over a sheave or a drum

3.2 Symbols

The main symbols used in this document are given in ISO 4301-1, ISO 8686-1, ISO 20332 and Table 1.

Table 1 — Symbols

Symbols	Description
A	Classes for group classification of a crane or hoist (see ISO 4301-1)
A_C	Classes for group classification of a component (see ISO 4301-1)
a	Acceleration or deceleration
C	Total number of working cycles during design life of a crane (see ISO 4301-1)
C_r	Total number of working cycles during the design life of a rope
D	Rope bending diameter
D_1	Rope bending diameter of drum

© ISO 2025 – All rights reserved

Documents
Document Sharing Hub
Full document details: BS ISO 16625:2025

Table 1 *(continued)*

Symbols	Description
D_2	Rope bending diameter of sheave
d	Nominal rope diameter
F, S	Rope tension force
F_h	Horizontal force acting on the hoist load
F_{min}	Minimum breaking force of the rope (see ISO 17893)
$F_{Rd,f}$	Limit design rope force for the proof of fatigue strength
$F_{Rd,m}$	Limit design rope force for multilayer spooling
$F_{Rd,s}$	Limit design rope force for the proof of static strength
F_{ref}	Reference value of rope tensile force to describe the reference point of the S-N curve (Wöhler-curve) at the proof of fatigue strength
F_{Sd}	Design rope force
$F_{Sd,f}$	Design rope force for the proof of fatigue strength
$F_{Sd,m}$	Design rope force for multilayer spooling
$F_{Sd,s}$	Design rope force for the proof of static strength
f_F	Factor of further influences to the rope tension force F_{ref}
f_{F1}	Factor of influence of wire tensile strength
f_{F2}	Factor of fleet angle influence
f_{F3}	Factor of lubrication influence
f_{F4}	Factor of groove radius influence
f_{S1}	Rope force increasing factor from rope reeving efficiency to be used at the proof of static strength
f_{S2}	Rope force increasing factor from non-parallel falls to be used at the proof of static strength
f_{S3}	Rope force increasing factor from horizontal forces to be used at the proof of static strength
f_{S4}	Rope force reduction factor due to the type of rope termination to be used at the proof of static strength
f_{S2}^*	Rope force increasing factor from non-parallel falls to be used at the proof of fatigue strength
f_{S3}^*	Rope force increasing factor from horizontal forces to be used at the proof of fatigue strength
f_w	Factor of further influences to the reference number of bending cycles w_{ref}
f_{w1}	Factor of rope type influence
f_{w2}	Factor of rope diameter influence
g	Acceleration due to gravity
K_p	Load spectrum factor (see ISO 4301-1)
k_r	Rope force spectrum factor
l_r	Number of ropes assumed to be used during the design life of the crane
m	Exponent, slope of the S-N curve (Wöhler-curve)
m_H	Mass of the hoist (gross) load (see ISO 8686-1)
m_{Hr}	Mass of the hoist load or that part of the mass of the hoist load that is acting on the rope falls
$m_{Hr,1}$	Portion of the total mass of the hoist load m_H that is acting on the closing ropes
$m_{Hr,2}$	Portion of the total mass of the hoist load m_H that is acting on the holding ropes
m_R	Mass of the portion of the suspended ropes of the hoist drive
N_{ref}	Number of tensile force cycles at reference point (see also ISO 20332)
N_t	Total number of tensile force cycles during the design life of a crane (see ISO 20332)
n	Number of contact points passed by a part of the rope that initiates a change of curvature in the rope
n	Number of tensile force cycles

© ISO 2025 – All rights reserved

Documents
Document Sharing Hub
Full document details: BS ISO 16625:2025

Table 1 *(continued)*

Symbols	Description
n_m	Mechanical advantage
n_s	Number of fixed sheaves between drum and moving part
$p_{f,r}$	Proof of fatigue strength for running ropes
$p_{f,s}$	Proof of fatigue strength for stationary ropes
$p_{m,r}$	Proof of competence for multilayer spooling for running ropes
$p_{s,r}$	Proof of static strength for running ropes
$p_{s,s}$	Proof of static strength for stationary ropes
$q(z)$	Normalized position density
R_r	Rope grade (see ISO 2232)
r_g	Groove radius
S_k	Design load effect in rope drive k of ropes or rope falls, as an inner force, resulting from load combination F_j
S_r	Resulting design force in particular rope
S_{r1}	Design load effect in particular rope
S_{r2}	Design load effect in particular rope arising from local effects
s_r	Rope force history parameter
w	Number of bending cycles
w_c	Bending count of a particular type of bending
w_{Crane}	Assumed total number of bending cycles during the design life of a crane
w_{max}	Maximum number of bending cycles in the most unfavourable part of the reeving system
w_{ref}	Reference number of bending cycles of the S-N curve (Wöhler-curve) for the proof of fatigue strength
w_{tot}	Total number of bending cycles during the design life of a rope in the rope section
w^*	Assumed total number of bending cycles during the design life of a rope
Z_p	Minimum design factor
z, z_i, z_{min}, z_{max}, z_{ref}	Position coordinates
α	Deflection angle
β_{max}	Maximum angle between falls and line of action of force
$\beta(z)$	Angle between falls and line of action of force depending on coordinate z
γ	Angle between direction of gravity and rope projected in plane of F_h and g
γ_n	Risk coefficient (see ISO 8686-1)
γ_p	Partial safety factor (see ISO 8686-1)
γ_{rb}	Rope resistance factor to be used at the proof of static strength and multilayer spooling
γ_{ref}	Factor to adapt the minimum breaking force of the rope F_{min} to the reference rope tension force F_{ref} at the proof of fatigue strength
γ_{rf}	Rope resistance factor to be used at the proof of fatigue strength
γ_{rfD}	Minimum rope resistance factor to prevent from exceeding the Donandt-force
δ	Fleet angle
ε	Angle between sheave planes
η_s	Efficiency of applied rope, sheave and bearing
η_{tot}	Total rope reeving efficiency of the rope drive
ν_r	Relative total number of cycles
ϕ	Dynamic factor for inertial and gravity effects
ϕ^*	Dynamic factor for inertial effects at the proof of fatigue strength and multilayer spooling

© ISO 2025 – All rights reserved

Documents
Document Sharing Hub
Full document details: BS ISO 16625:2025

Table 1 *(continued)*

Symbols	Description
ϕ_2	Dynamic factor for inertial and gravity effects when hoisting an unrestrained grounded load (see ISO 8686-1)
ϕ_5	Dynamic factor for inertial effect (see ISO 8686-1)
ϕ_6	Dynamic factor for inertial and gravity effects when hoisting an unrestrained grounded load under dynamic test load conditions (see ISO 8686-1)
ω	Groove opening angle

4 Running ropes and stationary ropes

4.1 General

Running ropes on cranes are stressed by tensile loads and by bending over sheaves and/or on drum. These cyclic load effects constitute a cumulative fatigue effect to the rope. Within this document this effect is expressed with the rope force history parameter s_r, which is independent of time. For the fatigue proof of competence, it is essential to select a proper number of ropes l_r, which are assumed to be used during the design life of the crane or hoist. Guidance for the choice of l_r is given in Annex E.

Stationary ropes are considered to be part of the cranes load bearing structure and are stressed primarily by tensile loads.

For both categories of wire ropes, running ropes and stationary ropes, several proofs of competence shall be performed.

For running ropes:

— static proof of competence, see 5.1;

— fatigue proof of competence, see 5.2;

— proof of competence for ropes in multilayer spooling, see 5.3, if applicable.

For stationary ropes:

— static proof of competence, see 6.1;

— fatigue proof of competence, see 6.2.

NOTE 1 Only in exceptional cases where some essential information regarding the crane or hoist is missing or some essential parameter values are unknown and cannot be obtained from the documentation of the crane or hoist, a selection of the wire rope according Annex D can be done in order to provide a minimum safety level.

NOTE 2 For the purposes of this document, ‘single-layer ropes’ and ‘parallel-closed ropes’, as defined in ISO 17893, are referred to as ‘standard ropes’ to distinguish themselves from ‘rotation-resistant ropes’.

NOTE 3 Single-layer ropes and parallel-closed ropes are sometimes referred to as ‘non-rotation-resistant ropes’.

4.2 Discard criteria

To ensure the safe use of the wire rope, the discard criteria of ISO 4309 shall apply.

If the intended number of ropes l_r to be used during the design life of the crane is greater than 1, then the design life of the specified rope shall be chosen to exceed the periodic inspection interval of the rope always.

When polymer sheaves are used exclusively in conjunction with single-layer spooling, the deterioration of the rope is likely to advance at a greater rate internally than externally.

Further information is given in Annex F, F.3.

© ISO 2025 – All rights reserved

Documents
Document Sharing Hub
Full document details: BS ISO 16625:2025

4.3 Rope and rope terminations

The wire rope shall meet the requirements specified in ISO 2408.

Ropes selected shall be fit for the application and be made of suitable materials so that they withstand the design forces during the design life of the rope.

The operating environment shall be taken into account and, if necessary, greasing, galvanising or special rope materials shall be considered.

Rope terminations shall meet the requirements of one or more of the following standards: ISO 8793, ISO 17558, EN 13411-3, EN 13411-4, EN 13411-6, EN 13411-8.

Rope terminations shall be such that bending of the rope adjacent to the termination and other additional stresses on the rope are eliminated.

For non-rotation resistant ropes, the end termination shall be made in such a way that it is not possible for the rope to twist around the longitudinal axis. For rotation resistant ropes, a swivel can be integrated in the end termination to relieve any twist induced into the rope reeving system.

Further information is given in Annex F, F.10.2 and F.11.

5 Proof of competence of running ropes

5.1 Proof of static strength

5.1.1 General

The proof of static strength according to Formula (1) shall be provided for all relevant load combinations according to ISO 8686-1, or ISO 8686-2, ISO 8686-3, ISO 8686-4 or ISO 8686-5, as applicable, considering the rope specific effects described in this document.

$$p_{s,r} : F_{Sd,s} \leq F_{Rd,s} \tag{1}$$

where

$p_{s,r}$ is the proof of static strength for running ropes;

$F_{Sd,s}$ is the design rope force for the proof of static strength;

$F_{Rd,s}$ is the limit design rope force for the proof of static strength.

5.1.2 Vertical hoisting of loads

5.1.2.1 Design rope force

The design rope force $F_{Sd,s}$ in vertical hoisting of loads shall be calculated according to Formula (2):

$$F_{Sd,s} = \frac{m_{Hr} \times g}{n_m} \times \phi \times f_{S1} \times f_{S2} \times f_{S3} \times \gamma_p \times \gamma_n \tag{2}$$

© ISO 2025 – All rights reserved

Documents
Document Sharing Hub
Full document details: BS ISO 16625:2025

where

m_{Hr}	is the mass of the hoist load (m_H) or that part of the mass of the hoist load that is acting on the rope falls under consideration (see Figure 1). The mass of the hoist load includes the masses of the payload, load-lifting attachments and a portion of the suspended hoist ropes. In statically undetermined systems, the unequal load distribution between ropes depends on elasticities and shall be taken into account;
g	is the acceleration due to gravity;
n_m	is the mechanical advantage of reeving;
ϕ	is the dynamic factor for inertial and gravity effects, see 5.1.2.2;
f_{S1} to f_{S3}	are the rope force increasing factors, see 5.1.2.3;
γ_p	is the partial safety factor (see ISO 8686-1):
$\gamma_p = 1{,}34$	for regular loads (load combinations A),
$\gamma_p = 1{,}22$	for occasional loads (load combinations B),
$\gamma_p = 1{,}10$	or exceptional loads (load combinations C);
γ_n	is the risk coefficient, where applicable (see ISO 8686-1, additionally ISO 12100 may be used for risk assessment).

© ISO 2025 – All rights reserved

Documents
Document Sharing Hub
Full document details: BS ISO 16625:2025

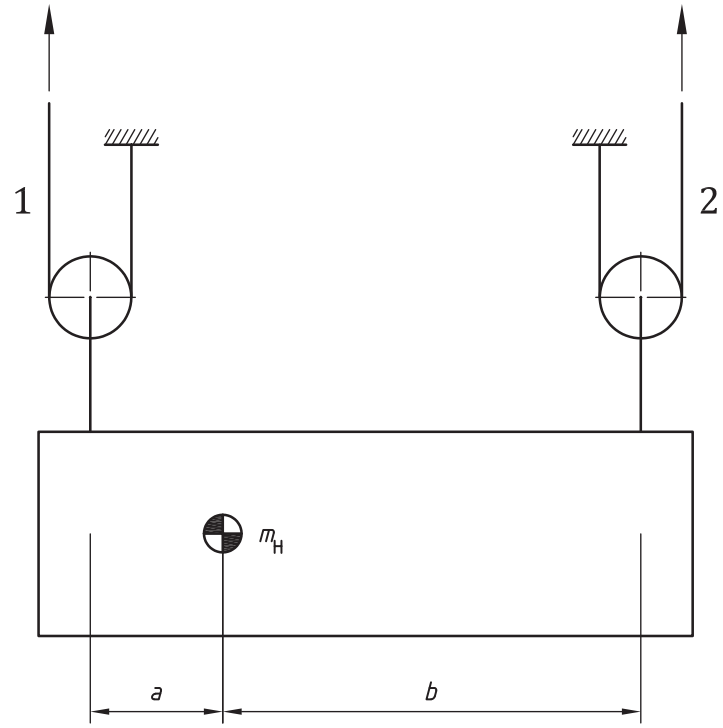

Key

1 rope number 1

2 rope number 2

m_H mass of the hoist load

a distance between line of action of rope drive 1 to the centre of gravity of the hoist load

b distance between line of action of rope drive 2 to the centre of gravity of the hoist load

Figure 1 — Example for acting ropes on eccentric mass of hoist load

Further information regarding the determination of the maximum tensile force in the ropes of multi-rope grabs is given in Annex B.

5.1.2.2 Inertial and gravitational effects acting vertically on the load

5.1.2.2.1 General

For vertical hoisting of loads the maximum inertial effects from either hoisting an unrestrained grounded load or from acceleration or deceleration of same shall be taken into account by the dynamic factor ϕ, given in 5.1.2.2.2 to 5.1.2.2.4 according to ISO 8686-1.

5.1.2.2.2 Hoisting an unrestrained grounded load

The dynamic factor ϕ to consider hoisting of an unrestrained grounded load shall be calculated according to Formula (3):

$$\phi = \phi_2 \tag{3}$$

where ϕ_2 is the dynamic factor for inertial and gravity effects when hoisting an unrestrained grounded load (see ISO 8686-1).

© ISO 2025 – All rights reserved

Documents
Document Sharing Hub
Full document details: BS ISO 16625:2025

5.1.2.2.3 Accelerating a suspended load

The dynamic factor ϕ to consider accelerating a suspended load shall be calculated according to Formula (4):

$$\phi = 1 + \phi_5 \times \frac{a}{g} \tag{4}$$

where

ϕ_5 is the dynamic factor for inertial effects when accelerating or decelerating a suspended load (see ISO 8686-1);

a is the vertical acceleration of the suspended load;

g is the acceleration due to gravity.

5.1.2.2.4 Hoisting of dynamic test load

The dynamic factor ϕ to consider hoisting of a dynamic test load shall be calculated according to Formula (5):

$$\phi = \phi_6 \tag{5}$$

where ϕ_6 is the dynamic factor for inertial and gravity effects when hoisting an unrestrained grounded load under dynamic test load conditions (see ISO 8686-1).

NOTE When testing a crane typically dynamic and static tests are performed (see ISO 4310).

5.1.2.2.5 Loads caused by emergency cut-out

The dynamic factor ϕ to consider loads caused by emergency cut-out shall be calculated according to Formula (6):

$$\phi = 1 + \phi_5 \times \frac{a}{g} \tag{6}$$

where

ϕ_5 is the dynamic factor for inertial effects when accelerating a suspended load in an emergency cut-out situation (see ISO 8686-1);

a is the vertical acceleration or deceleration of the suspended load;

g is the acceleration due to gravity.

5.1.2.3 Rope force increasing factors

5.1.2.3.1 Rope reeving efficiency

The rope force increasing factor from rope reeving efficiency f_{S1} shall be calculated according to Formula (7):

$$f_{S1} = \frac{1}{\eta_{tot}} \tag{7}$$

© ISO 2025 – All rights reserved

Documents
Document Sharing Hub
Full document details: BS ISO 16625:2025

with

$$\eta_{tot} = \frac{(\eta_S)^{n_s}}{n_m} \times \frac{1-(\eta_S)^{n_m}}{1-\eta_S} \tag{8}$$

where

η_{tot} is the total rope reeving efficiency of the rope drive;

η_S is the efficiency of applied rope, sheave and bearing:

for sheave with roller bearing, commonly used $\eta_S = 0{,}985$

for sheave with plain bearing, commonly used $\eta_S = 0{,}965$

NOTE The values for η_S vary due to the rope design, *D/d*-ratio and bearing type;

n_m is the mechanical advantage of reeving (see example in Figure 2);

n_s is the number of fixed sheaves between drum and moving part.

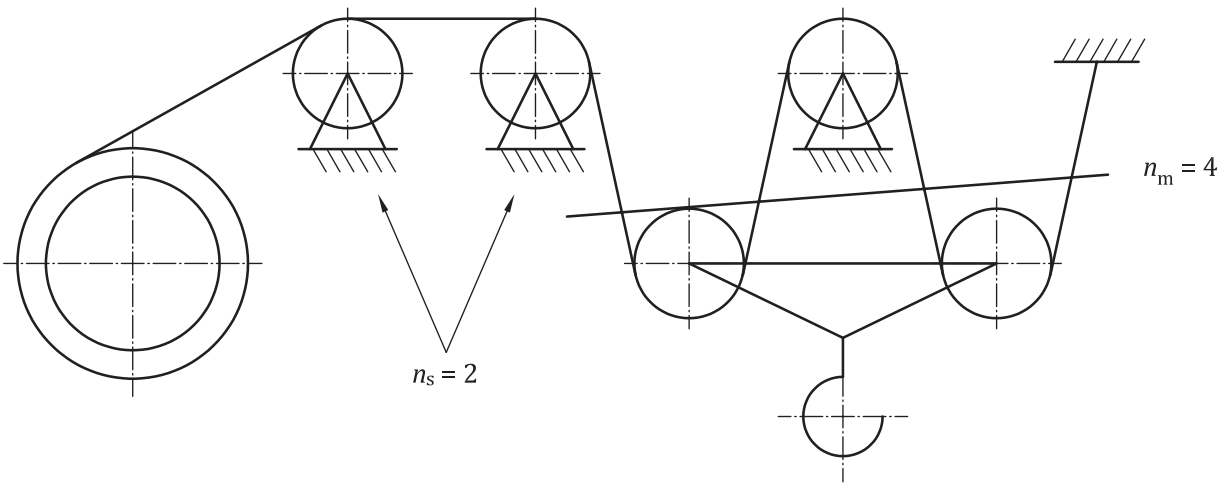

Figure 2 — Example of a rope reeving

5.1.2.3.2 Non-parallel falls

When the rope falls are not parallel, the rope force is increased. The rope force increasing factor from non-parallel falls f_{S2} shall be determined for the most unfavourable position.

The rope force increasing factor from non-parallel falls f_{S2} shall be calculated according to Formula (9):

$$f_{S2} = \frac{1}{\cos \beta_{max}} \tag{9}$$

where β_{max} is the maximum angle between falls and line of action of force, see Figure 3.

© ISO 2025 – All rights reserved

Documents
Document Sharing Hub
Full document details: BS ISO 16625:2025

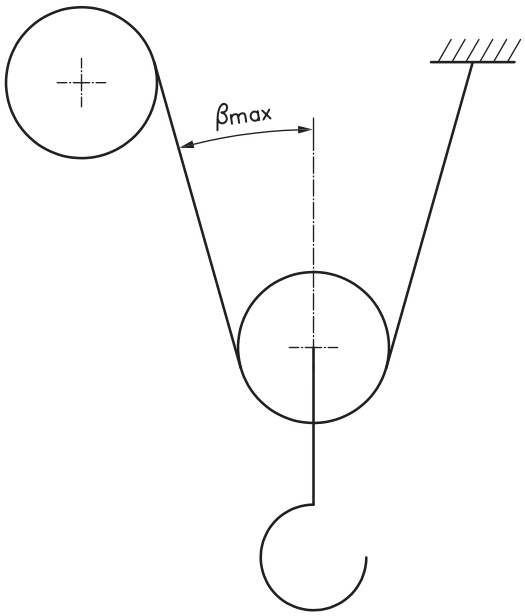

Figure 3 — Angle β_{max} at inclined rope falls

5.1.2.3.3 Horizontal forces acting on the hoist load

The rope force increasing effect due to horizontal forces (e.g. by trolley or crane accelerations, wind) may be neglected in applications with free swinging loads.

However, in applications with several non-parallel and independent ropes (e.g. anti-oscillatory reeving, see Figure 4) horizontal forces increase the rope force considerably. This effect shall be taken into account.

Simplified, the rope force increasing factor from horizontal forces f_{S3} may be calculated according to Formula (10):

$$f_{S3} = 1 + \frac{F_h}{m_{Hr} \times g \times tan\,\gamma} \leq 2 \qquad (10)$$

where

F_h is the horizontal force acting on the hoist load;

m_{Hr} is the mass of the hoist load (m_H) or that part of the mass of the hoist load that is acting on the rope falls under consideration (see Figure 1). The mass of the hoist load includes the masses of the payload, load-lifting attachments and a portion of the suspended hoist ropes. In statically undetermined systems, the unequal load distribution between ropes depends on elasticities and shall be taken into account;

g is the acceleration due to gravity;

γ is the angle between direction of gravity and the rope projected in the plane determined by F_h and direction of gravity g.

© ISO 2025 – All rights reserved

Documents
Document Sharing Hub
Full document details: BS ISO 16625:2025

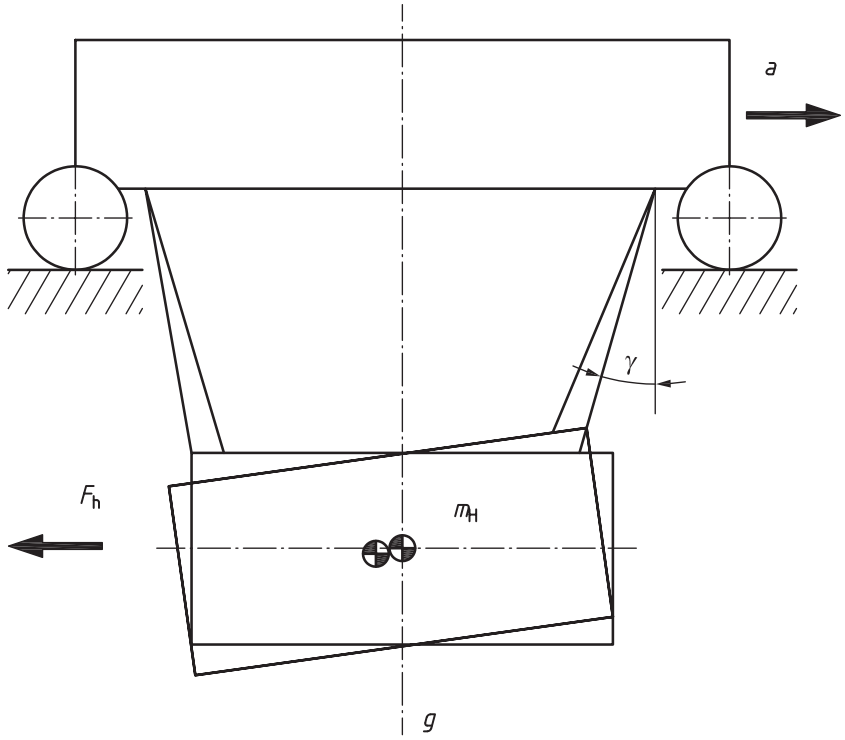

Figure 4 — Load suspension with inclined and independent ropes

Increase of load effects due to ϕ and f_{S3} in Formula (2) may be handled separately, only in cases where simultaneous action of horizontal and vertical accelerations is prevented by technical means (e.g. by the control system).

In case conditions of this subclause apply, f_{S2} is usually already incorporated in f_{S3} in the plane of the horizontal force acting. In the plane perpendicular to this force, the effect of inclined rope falls shall be considered.

5.1.3 General rope drives

5.1.3.1 Design rope force

Figure 5 illustrates the general determination of the design rope force using the limit state method for the proof of competence.

© ISO 2025 – All rights reserved

Documents
Document Sharing Hub
Full document details: BS ISO 16625:2025

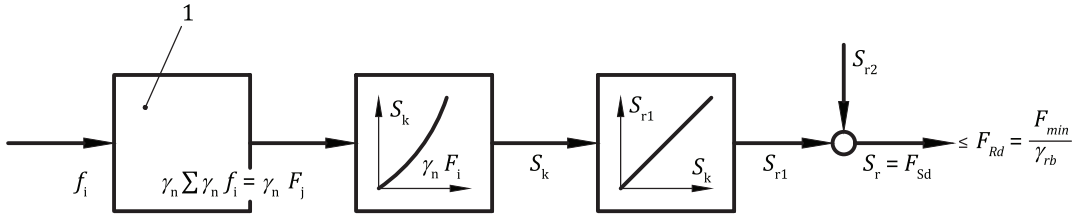

Key

1	load and load combinations, see Table 2 and ISO 8686-1:2012, Table 3
f_i	characteristic load action *i* acting on the component including dynamic factors ϕ_i
F_j	combined load actions from load combination j
S_k	design load effects in rope drive *k* of ropes or rope falls, such as inner forces, resulting from load combination F_j
S_{r1}	design load effect in the particular rope as a result of load effects S_k including rope force increasing factors f_{S1} and f_{S2}
S_{r2}	additional design load effect in the particular rope arising from local effects, e.g. rope pre-tensioning force (in case this load effect has not been applied as load action)
$F_{Sd} = S_r$	resulting design force in particular rope
F_{Rd}	limit design rope force
F_{min}	minimum breaking force of the rope
γ_p	partial safety factors applied to individual load actions according to the load combination under consideration
γ_n	risk coefficient, where applicable (see ISO 8686-1, additionally ISO 12100 may be used for risk assessment)
γ_{rb}	rope resistance factor

Figure 5 — Flow chart of limit state method for the proof of competence of wire ropes

NOTE A flow chart similar to Figure 5 can be found in ISO 8686-1:2012, Annex A, where it is used to explain the proof of competence of structural parts using the limit state method.

Step '1' in Figure 5 illustrates the creation of the relevant load combinations, which shall be applied on the mechanical model. It is important that for general rope drives additional load actions shall be considered, which are not given in ISO 8686-1:2012, Table 3. These additional load actions shall be taken from Table 2. These load actions shall be multiplied with their partial safety factor γ_p and added to each relevant load combination. Hence, Table 2 shall always be used in conjunction with ISO 8686-1:2012, Table 3, where all further information regarding load actions and load combinations are given.

© ISO 2025 – All rights reserved

Documents
Document Sharing Hub
Full document details: BS ISO 16625:2025

Table 2 — Additional loads and their partial safety factors γ_p

Categories of loads	Loads, f_i	Load combinations A	Load combinations B	Load combinations C
		Partial safety factors γ_p	Partial safety factors γ_p	Partial safety factors γ_p
Regular	Travel resistance force	1,34	1,22	1,1
	Rope pre-tensioning force without controlled application [a]	1,22	1,16	1,1
	Rope pre-tensioning force with controlled application [a]	1,16	1,1	1,05

[a] Controlled application means that the rope pre-tensioning force is quantified, and its application is measurable, e.g. by a torque wrench.

The design rope force $F_{Sd,s}$ in general rope drives shall be calculated according to Formula (11):

$$F_{Sd,s} = S_r = S_{r1} + S_{r2} = \frac{S_k}{n_m} \times f_{S1} \times f_{S2} + S_{r2} \tag{11}$$

where

S_r is the resulting design force in particular rope;

S_{r1} is the design load effect in particular rope;

S_{r2} is the design load effect in particular rope arising from local effects;

S_k is the design load effects in rope drive k of ropes or rope falls, as an inner force, resulting from load combination F_j;

n_m is the mechanical advantage of reeving;

f_{S1}, f_{S2} are the rope force increasing factors, see 5.1.2.3.

Figure 6 illustrates general rope drives with different load actions and dynamic effects leading to a complex state of loading.

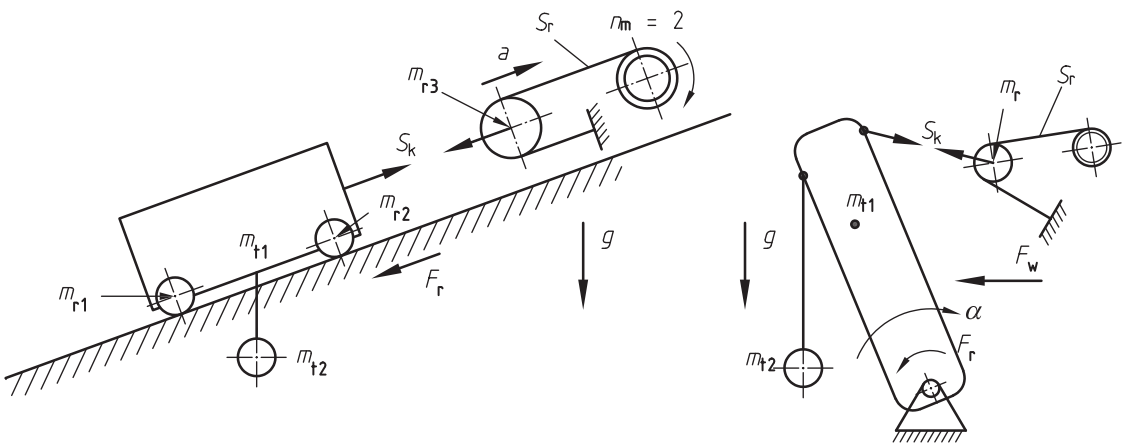

a) Examples for general rope drive with translatory and rotatory masses

© ISO 2025 – All rights reserved

Documents
Document Sharing Hub
Full document details: BS ISO 16625:2025

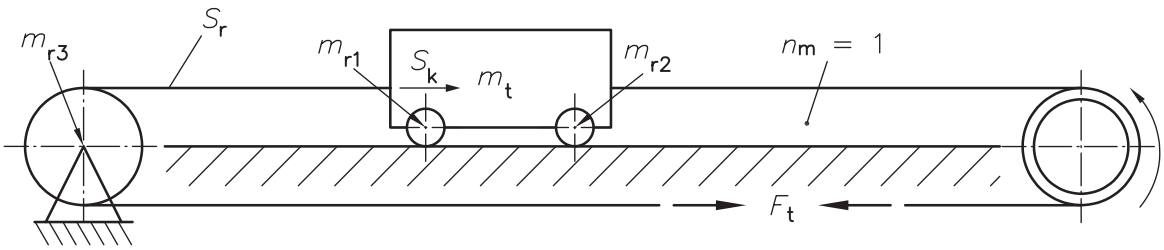

b) Example for general rope drive including rope pre-tension

Key

m_r, m_{r1}, m_{r2}, m_{r3}	rotatory rope driven masses
m_t, m_{t1}, m_{t2}	translational rope driven masses
S_r, S_k	design load effects, see 5.1.3.1
F_w, F_r, F_t	forces induced by wind forces, or by resistances, or by rope tightening forces
a, g, $\propto$	accelerations
n_m	mechanical advantage

Figure 6 — Examples for general rope drives

5.1.4 Limit design rope force

The limit design rope force $F_{Rd,s}$ shall be calculated according to Formula (12):

$$F_{Rd,s} = \frac{F_{min}}{\gamma_{rb}} \times \min\{f_{S4}; f_{S5}\} \tag{12}$$

$$\text{with } \gamma_{rb} = \gamma_m \times \gamma_s \tag{13}$$

where

F_{min} is the specified minimum breaking force of the rope, see ISO 17893;

γ_{rb} is the rope resistance factor and results to 2,0;

f_{S4} is the rope force reduction factor due to the type of rope termination, see Table 3;

f_{S5} is the rope force reduction factor due to D/d-ratio of drum or sheave and rope, see Formula (14);

γ_m is the general resistance factor γ_m = 1,1, see ISO 8686-1;

γ_s is the specific resistance factor γ_s = 1,82 for a proof of competence against breaking strength of a wire rope taking into account the decrease of the minimum breaking load over the operating time as well as the exceeding of the yield point of individual wires in the rope.

© ISO 2025 – All rights reserved

Documents
Document Sharing Hub
Full document details: BS ISO 16625:2025