BS ISO 16750-3:2023

BSI Standards Publication

Road vehicles — Environmental conditions and testing for electrical and electronic equipment

Part 3: Mechanical loads

Documents
Document Sharing Hub

Full document details: BS ISO 16750-3:2023

National foreword

This British Standard is the UK implementation of ISO 16750-3:2023. It supersedes BS ISO 16750-3:2012, which is withdrawn.

The UK participation in its preparation was entrusted to Technical Committee AUE/32, Electrical and electronic components and general system aspects (Road vehicles).

A list of organizations represented on this committee can be obtained on request to its committee manager.

Contractual and legal considerations

This publication has been prepared in good faith, however no representation, warranty, assurance or undertaking (express or implied) is or will be made, and no responsibility or liability is or will be accepted by BSI in relation to the adequacy, accuracy, completeness or reasonableness of this publication. All and any such responsibility and liability is expressly disclaimed to the full extent permitted by the law.

This publication is provided as is, and is to be used at the recipient's own risk.

The recipient is advised to consider seeking professional guidance with respect to its use of this publication.

This publication is not intended to constitute a contract. Users are responsible for its correct application.

© The British Standards Institution 2023
Published by BSI Standards Limited 2023

ISBN 978 0 539 04084 5

ICS 43.040.10

Compliance with a British Standard cannot confer immunity from legal obligations.

This British Standard was published under the authority of the Standards Policy and Strategy Committee on 31 August 2023.

Amendments/corrigenda issued since publication

Date	Text affected

Documents
Document Sharing Hub

Full document details: BS ISO 16750-3:2023

INTERNATIONAL STANDARD

ISO 16750-3

Fourth edition
2023-07

Road vehicles — Environmental conditions and testing for electrical and electronic equipment —

Part 3: Mechanical loads

Véhicules routiers — Spécifications d'environnement et essais de l'équipement électrique et électronique —

Partie 3: Contraintes mécaniques

Reference number
ISO 16750-3:2023(E)

Documents
Document Sharing Hub

© ISO 2023

Full document details: BS ISO 16750-3:2023

COPYRIGHT PROTECTED DOCUMENT

© ISO 2023

All rights reserved. Unless otherwise specified, or required in the context of its implementation, no part of this publication may be reproduced or utilized otherwise in any form or by any means, electronic or mechanical, including photocopying, or posting on the internet or an intranet, without prior written permission. Permission can be requested from either ISO at the address below or ISO's member body in the country of the requester.

ISO copyright office
CP 401 • Ch. de Blandonnet 8
CH-1214 Vernier, Geneva
Phone: +41 22 749 01 11
Email: copyright@iso.org
Website: www.iso.org

Published in Switzerland

© ISO 2023 – All rights reserved

Documents
Document Sharing Hub

Full document details: BS ISO 16750-3:2023

Contents

Page

Foreword ... **v**

1 Scope ... **1**

2 Normative references ... **1**

3 Terms and definitions ... **2**

4 Tests and requirements ... **2**

4.1 Vibration ... 2
4.1.1 Testing conditions during the vibration test ... 2
4.1.2 Test Ia - Passenger car, combustion engine, small and lightweight DUT ... 9
4.1.3 Test II — Passenger car, gearbox attached to a combustion engine, small and lightweight DUT ... 11
4.1.4 Test VI — Commercial vehicle, combustion engine and gearbox, small and lightweight DUT ... 13
4.1.5 Test XIII — Passenger car, hybrid-electric powertrain, combustion engine and gearbox, large and heavy DUT ... 17
4.1.6 Test XV — Passenger car, driving electric motor ... 20
4.1.7 Test XVII — Commercial vehicle, driving electric motor ... 23
4.1.8 Test IV — Passenger car, sprung masses (vehicle body), small and lightweight DUT ... 24
4.1.9 Test VII — Commercial vehicle, sprung mass (vehicle body), small and lightweight DUT ... 26
4.1.10 Test XIV — Hybrid-electric/fully-electric passenger car, sprung mass (vehicle body), large and heavy DUT ... 27
4.1.11 Test XVI — Hybrid-electric/fully-electric commercial vehicle, sprung mass (vehicle body), large and heavy DUT ... 29
4.1.12 Test V — Passenger car, unsprung mass (wheel, wheel suspension), small and lightweight DUT ... 30
4.1.13 Test IX — Commercial vehicle, unsprung mass, small and lightweight DUT ... 32
4.1.14 Test VIII — Commercial vehicle, decoupled cab ... 33
4.1.15 Test III — Passenger car, flexible plenum chamber ... 34
4.1.16 Test XI — Passenger car, solid intake manifold ... 35
4.1.17 Test Ib – Rotating machines ... 37
4.1.18 Test XII — Passenger car, exhaust pipe ... 40
4.1.19 Test X — Passenger car, components on fuel rail (gasoline engine with GDI-system) ... 44
4.2 Mechanical shock ... 46
4.2.1 Shock I — Test for devices in or on doors and flaps on passenger cars ... 46
4.2.2 Shock II — Test for devices on rigid points on the body and on the frame ... 47
4.2.3 Shock III — Test for devices in or on the gearbox ... 47
4.3 Free fall ... 48
4.3.1 Purpose ... 48
4.3.2 Test ... 48
4.3.3 Selection of drop height ... 49
4.3.4 Requirements ... 49
4.4 Surface strength/scratch and abrasion resistance ... 50
4.4.1 Purpose ... 50
4.4.2 Test method ... 50
4.4.3 Requirements ... 50
4.5 Gravel bombardment ... 50
4.5.1 Purpose ... 50
4.5.2 Test method ... 50
4.5.3 Requirements ... 50

5 Code letters for mechanical loads ... **51**

© ISO 2023 – All rights reserved

Documents
Document Sharing Hub
Full document details: BS ISO 16750-3:2023

6 Documentation **58**

Annex A (informative) **Guidelines for the development of test profiles for vibration tests** **59**

Annex B (informative) **Recommended mechanical requirements for equipment depending on the mounting location** **92**

Annex C (informative) **Guidelines for shaker testing of starter motors, alternators and similar DUTs** **93**

Annex D (informative) **Guidelines for free fall testing** **99**

Annex E (informative) **3D vibration testing for automotive components** **101**

Bibliography **104**

© ISO 2023 – All rights reserved

Documents
Document Sharing Hub

Full document details: BS ISO 16750-3:2023

Foreword

ISO (the International Organization for Standardization) is a worldwide federation of national standards bodies (ISO member bodies). The work of preparing International Standards is normally carried out through ISO technical committees. Each member body interested in a subject for which a technical committee has been established has the right to be represented on that committee. International organizations, governmental and non-governmental, in liaison with ISO, also take part in the work. ISO collaborates closely with the International Electrotechnical Commission (IEC) on all matters of electrotechnical standardization.

The procedures used to develop this document and those intended for its further maintenance are described in the ISO/IEC Directives, Part 1. In particular, the different approval criteria needed for the different types of ISO document should be noted. This document was drafted in accordance with the editorial rules of the ISO/IEC Directives, Part 2 (see www.iso.org/directives).

ISO draws attention to the possibility that the implementation of this document may involve the use of (a) patent(s). ISO takes no position concerning the evidence, validity or applicability of any claimed patent rights in respect thereof. As of the date of publication of this document, ISO had not received notice of (a) patent(s) which may be required to implement this document. However, implementers are cautioned that this may not represent the latest information, which may be obtained from the patent database available at www.iso.org/patents. ISO shall not be held responsible for identifying any or all such patent rights.

Any trade name used in this document is information given for the convenience of users and does not constitute an endorsement.

For an explanation of the voluntary nature of standards, the meaning of ISO specific terms and expressions related to conformity assessment, as well as information about ISO's adherence to the World Trade Organization (WTO) principles in the Technical Barriers to Trade (TBT), see www.iso.org/iso/foreword.html.

This document was prepared by Technical Committee ISO/TC 22, *Road vehicles*, Subcommittee SC 32, *Electrical and electronic components and general system aspects*.

This fourth edition cancels and replaces the third edition (ISO 16750-3:2012), which has been technically revised.

The main changes are as follows:

— integrating and harmonizing content from ISO 19453-3:2018;

— distinction between small and lightweight versus large and heavy DUTs;

— revising vibration profiles where necessary due to extended datasets of and experience from vehicle measurements;

— addition of vibration test for rotating machines on combustion engines and Annex C;

— addition of vibration tests for hybrid-electric/fully-electric commercial vehicles;

— addition of guided fall test description and Annex D;

— addition of Annex E as guidance for 3D shaker testing;

— test order appearing in the document has been changed for a logical grouping depending on test type, however test numbers have been kept for backwards compatibility.

A list of all parts in the ISO 16750 series can be found on the ISO website.

Any feedback or questions on this document should be directed to the user's national standards body. A complete listing of these bodies can be found at www.iso.org/members.html.

Documents
Document Sharing Hub

© ISO 2023 – All rights reserved

Full document details: BS ISO 16750-3:2023

Documents
Document Sharing Hub

Road vehicles — Environmental conditions and testing for electrical and electronic equipment —

Part 3: Mechanical loads

1 Scope

This document applies to electric and electronic systems and components for vehicles including electric propulsion systems and components with maximum working voltages according to voltage class B. It describes the potential environmental stresses and specifies tests and requirements recommended for the specific mounting location on/in the vehicle.

This document describes mechanical loads.

This document is not intended to apply to environmental requirements or testing for systems and components of motorcycles and mopeds.

Systems and their components released for production, or systems and their components already under development prior to the publication date of this document, can be exempted from fulfilling the changes in this edition compared to the previous one.

2 Normative references

The following documents are referred to in the text in such a way that some or all of their content constitutes requirements of this document. For dated references, only the edition cited applies. For undated references, the latest edition of the referenced document (including any amendments) applies.

ISO 16750-1:2023, *Road vehicles — Environmental conditions and testing for electrical and electronic equipment — Part 1: General*

ISO 16750-4:2023, *Road vehicles — Environmental conditions and testing for electrical and electronic equipment— Part 4: Climatic loads*

IEC 60068-2-6, *Environmental testing — Part 2-6: Testing, Test Fc: Vibration (Sinusoidal)*

IEC 60068-2-14, *Environmental testing — Part 2-14: Tests — Test N: Change of temperature*

IEC 60068-2-27, *Environmental testing — Part 2-27: Tests — Test Ea and guidance: Shock*

IEC 60068-2-31, *Environmental testing — Part 2-31: Tests — Test Ec: Rough handling shocks, primarily for equipment-type specimens*

IEC 60068-2-64, *Environmental testing — Part 2-64: Tests — Test Fh: Vibration, broadband random and guidance*

IEC 60068-2-80, *Environmental testing — Part 2-80: Tests — Test Fi: Vibration — Mixed mode*

UL 969:2017, *Standard for Marking and Labeling Systems*

ISO 20567-1:2017, *Paints and varnishes — Determination of stone-chip resistance of coatings — Part 1: Multi-impact testing*

© ISO 2023 – All rights reserved

Documents
Document Sharing Hub
Full document details: BS ISO 16750-3:2023

3 Terms and definitions

For the purposes of this document, the terms and definitions given in ISO 16750-1 apply.

ISO and IEC maintain terminology databases for use in standardization at the following addresses:

— ISO Online browsing platform: available at https://www.iso.org/obp

— IEC Electropedia: available at https://www.electropedia.org/

4 Tests and requirements

4.1 Vibration

4.1.1 Testing conditions during the vibration test

4.1.1.1 General

The vibration test methods specified consider various levels of vibration severities applicable to on-board electrical and electronic equipment. The customer and the supplier should choose the test method, environmental temperature and vibration parameters depending on the specific mounting location.

A clear dependence of the typical vibration load on the size and mass of the DUT is evident from vehicle measurements. This applies to all mounting locations due to dynamic system coupling. That is why in this document a distinction is made between small and lightweight E/E components (typically <2 kg, unless stated otherwise in the individual test description, e.g. sensors, ECUs or fuel injection equipment), mostly belonging but not limited to ICE vehicles, and much larger and heavier components (typically ≥2 kg, unless stated otherwise in the individual test description, e.g. electric motors, inverters, DC/DC converters or alternators), mostly belonging but not limited to electric powertrains in electric propulsion vehicles. In each application the applicability of the intended vibration profile should be verified with a vehicle measurement. See a mass classification example in ISO 16750-1:2023, Annex C. For further information and guidance please refer to Tables 38-40 (code letters).

The following basic idea of environmental test methods is expressed in the Foreword of Reference [7].

When applied properly, the environmental management and engineering processes described in this document can be of enormous value in generating confidence in the environmental worthiness and overall durability of the tested equipment. However, it is important to recognize that limitations inherent in laboratory testing make it imperative to use proper caution and engineering judgment when extrapolating these laboratory results to results that can be obtained under actual service conditions. In many cases, real world environmental stresses (singularly or in combination) cannot be duplicated practically or reliably in test laboratories. Therefore, users of this document should not assume that a system or component that passes laboratory tests of this document would also pass field/fleet verification trials.

The specified values are the best estimation that can be obtained up to the moment when results from measurements in the vehicle are received, but they do not replace a vehicle measurement.

The specified values apply to direct mounting in defined mounting locations. The specified vibration profiles apply to direct mounting in defined mounting locations. Since the use of an installation support (e.g. mounting bracket) can influence test vibration loads on the shaker to be much higher or much lower than actual vehicle loads, in principle, each vibration test should be carried out with only DUT itself. If using an installation support, the applied loads on the shaker should be checked to reproduce the actual vehicle loads as realistically as possible.

Carry out the vibration with the DUT rigidly mounted on a vibration table for reasons of comparability and reproducibility (see also IEC 60068-2-47:2005, Clauses 5 and 6). If using a bracket is technically unavoidable in order to fix the DUT to the shaker instead of a rigid mounting, then the transfer functions

© ISO 2023 – All rights reserved
AVA Documents Document Sharing Hub
Full document details: BS ISO 16750-3:2023

from the excitation to the DUT compared to vehicle measurements as well as a proper control strategy shall be considered. For further information refer to A.3. The mounting method(s) used shall be noted in the test report. The scope of the recommended vibration tests is to avoid malfunctions and breakage mainly due to fatigue in the field. Testing for wear has special requirements and is not covered in this document.

If active operation and/or signal monitoring is applied during the test, extra care shall be taken with respect to the fixation of the power cables and the wiring harnesses. This aims at avoiding signal disturbances and negative mechanical impact on the connector, caused by dynamic motion of the harness itself. The routing, rigidity, mass and fixation of wire harness in vehicle installation should also be considered when deciding on the fixation of wire harness in a test setup in order to avoid a wrong testing load for the DUT.

Loads outside the designated test frequency ranges can be considered separately if agreed between the customer and the supplier. If it is known that resonance frequencies of the DUT are present that are critical for fatigue and are not covered by the test frequency ranges, then it is recommended to perform separate durability tests, such as resonance dwell testing.

NOTE Deviations from the load on the DUT can occur if vibration testing is carried out according to this document on a large and heavy DUT, as mounting rigidity and dynamic reaction on the vibrator table excitation are different compared to the situation in the vehicle. Such deviations can be minimized by applying the average control method (see A.3).

The application of the weighted average control method in accordance with IEC 60068-2-64 may be agreed upon.

4.1.1.2 Overlaid temperature cycles during vibration testing

4.1.1.2.1 General

Vibration tests are typically run with an overlaid temperature cycle. The intention is not to create additional aging of the DUTs, but to induce a temperature-dependent dynamic response of or within the DUT that might otherwise not occur if only tested at room temperature.

In the vehicle, vibration stress can occur together at low or high temperatures; for this reason, this interaction between mechanical and temperature stress is simulated in the test, too. A failure mechanism occurs when material characteristics of components change and cannot withstand the acceleration under this condition. For example, a plastic part may mellow due to the high temperature.

The mass of the DUT as well as the installation area are the main influence factors that determine the design of the temperature cycle which is why in the following clauses the different use cases are distinguished.

For longer test durations of the vibration test the test cycles can be either repeated for a sufficient number of times or stretched to fit the test duration. None of the following temperature cycles shall be further compressed in their duration, otherwise a temperature equilibrium within the DUT might not be ensured.

Depending on the failure mode of the DUT, a deviating temperature profile may be used if agreed between the customer and the supplier.

Intentional humidity control is not permitted even if water condensation on the DUT occurs during temperature cycles.

© ISO 2023 – All rights reserved

Documents
Document Sharing Hub
Full document details: BS ISO 16750-3:2023

4.1.1.2.2 Temperature profile for small and lightweight components not mounted on the combustion engine

During the vibration test, for small and lightweight DUT not mounted on the combustion engine, perform the temperature cycling in accordance with IEC 60068-2-14, Test Nb, not using its specified temperature changing rates, but using the variant given in Figure 1 and Table 1.

NOTE 1 This temperature profile can also be applied to small and lightweight components mounted on electric drive systems or components.

Perform temperature cycling with the following as one cycle. Decrease ambient temperature from RT to T_{min}, expose the DUT at T_{min}, increase ambient temperature from T_{min} to T_{max}, expose the DUT at T_{max} and then decrease ambient temperature from T_{max} to RT (see Figure 1).

Perform a functional test at the end of T_{min} and T_{max} as short as possible with operating mode 3.3 or 4.3 as defined in ISO 16750-1 (see key a in Figure 1). In addition, operate with operating mode 3.4 or 4.4 as defined in ISO 16750-1 (see key b in Figure 1) during the section from room temperature (RT) to T_{max}. During the other sections, operate with operating mode 2.1 as defined in ISO 16750-1 (see key c in Figure 1). If operating mode 4.3/4.4 is not technically feasible, operating mode 3.3/3.4 may be used if agreed between the customer and the supplier.

NOTE 2 A permanent operation starting at T_{min} prevents possible condensation of humidity on DUT because the self-heating of the DUT occurs. An electrical operation starting at RT allows this phenomenon.

NOTE 3 Condensation can lead to swelling of plastic sub-components of the DUT and therefore, influence the dynamic behaviour under vibrational load.

© ISO 2023 – All rights reserved
Documents
Document Sharing Hub
Full document details: BS ISO 16750-3:2023

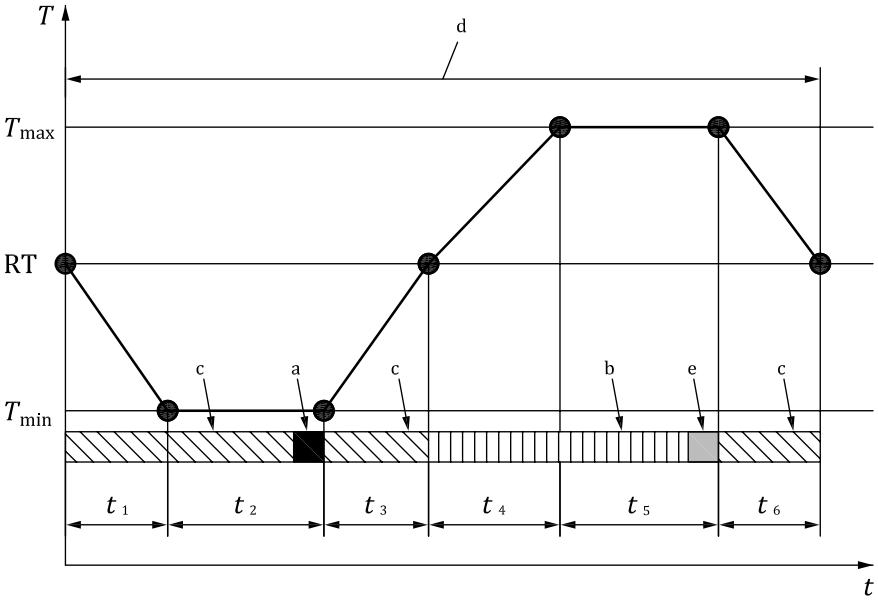

Key

T	temperature [°C]
t	time
T_{min}	minimum operating temperature as defined in ISO 16750-4
T_{max}	maximum operating temperature as defined in ISO 16750-4
RT	room temperature as defined in ISO 16750-1
t_1, t_2, t_3, t_4, t_5, t_6	time parameter as defined in Table 1
a	Functional test with operating mode 3.3 or 4.3 as defined in ISO 16750-1.
b	Operating mode 3.4 or 4.4 as defined in ISO 16750-1.
c	Operating mode 2.1 as defined in ISO 16750-1.
d	One cycle.
e	Functional test with operating mode 3.4 or 4.4 as defined in ISO 16750-1.

Figure 1 — Temperature cycle with specified change rate for the vibration test of a small and lightweight DUT

Table 1 — Temperatures versus time duration for temperature cycling for the vibration test of a small and lightweight DUT

Parameter	Duration [min]	Temperature [°C]
t_1	60	From RT to T_{min}
t_2	90	Exposure time at T_{min}
t_3	60	From T_{min} to RT
t_4	90	From RT to T_{max}
t_5	110	Exposure time at T_{max}
t_6	70	From T_{max} to RT
NOTE T_{min} and T_{max} are defined in ISO 16750-4:2023, Table 1.		

© ISO 2023 – All rights reserved

Documents
Document Sharing Hub
Full document details: BS ISO 16750-3:2023

4.1.1.2.3 Temperature profile for large and heavy components not mounted on the combustion engine

During the vibration test, for large and heavy DUT not mounted on the combustion engine, perform the temperature cycling in accordance with IEC 60068-2-14, Test Nb, not using its specified temperature changing rates, but using the variant given in Figure 2 and Table 2.

Perform temperature cycling with the following as one cycle. Decrease ambient temperature from RT to T_{min}, expose the DUT at T_{min}, increase ambient temperature from T_{min} to T_{max}, expose the DUT at T_{max} and then decrease ambient temperature from T_{max} to RT (see Figure 2).

Before performing this test, a separate temperature measurement (with DUT in operating mode 2.1 as defined in ISO 16750-1) shall be performed to determine what exposure time at T_{max}, T_{min} (see Figure 2) is necessary to warrant that this desired temperature is also reached in DUT temperature. The measuring point of the DUT shall be agreed between the customer and the supplier, considering a target device (e.g. microprocessor, motor coil) which is temperature-influenced in functionality or performance.

If operating mode 2.1 is technically not feasible for the separate temperature measurement, operating mode 1.2 as defined in ISO 16750-1, can be used as agreed between the customer and the supplier.

Measures regarding the functional performance, for example, de-rating of the e-motor, are allowed to avoid overheating of the DUT during high-temperature operation with self-heating effects.

The dwell time t_x of the DUT at T_{min} and T_{max} shall be more than 30 min each per temperature cycle; therefore, exposure time shall be adjusted accordingly depending on the size and other characteristics of the DUT. The customer and the supplier shall agree on a complete profile of temperature cycle including dwell time and stabilisation time depending on the size and other properties of the DUT.

NOTE This temperature profile can also be applied to large and heavy components mounted on electric drive systems or components.

Perform a functional test at the end of T_{min} and T_{max} as short as possible with operating mode 3.3 or 4.3 as defined in ISO 16750-1 (see key a in Figure 2). In addition, operate with operating mode 3.4 or 4.4 as defined in ISO 16750-1 (see key b in Figure 2) during the section from room temperature (RT) to T_{max}. During the other sections, operate with operating mode 2.1 as defined in ISO 16750-1 (see key c in Figure 2). If operating mode 4.3/4.4 is not technically feasible, operating mode 3.3/3.4 may be used if agreed between the customer and the supplier. For electric motors, active operation in operation mode 3.3 or 4.3 instead of 2.1 can be performed in order to avoid unrealistic failure mechanism, e.g. wear in the bearing of an e-motor due to the vibration input.

© ISO 2023 – All rights reserved
Documents
Document Sharing Hub
Full document details: BS ISO 16750-3:2023

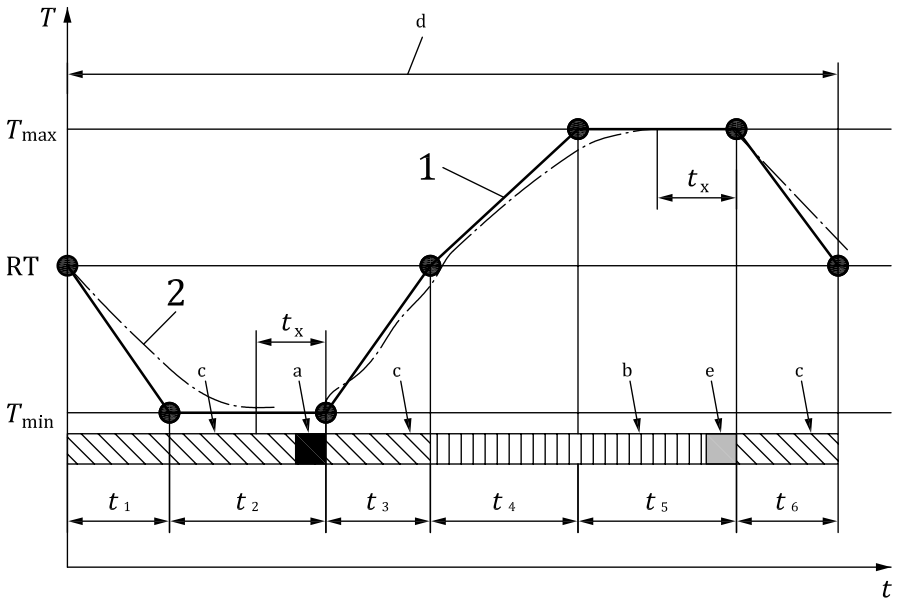

Key

T	temperature [°C]
t	time
1	ambient temperature
2	DUT temperature, exemplary for non-heat dissipating DUTs
T_{min}	minimum operating temperature as defined in ISO 16750-4
T_{max}	maximum operating temperature as defined in ISO 16750-4
RT	room temperature as defined in ISO 16750-1
t_1, t_2, t_3, t_4, t_5, t_6	time parameter as defined in Table 2
t_x	dwell time at T_{min} or T_{max}
a	Functional test with operating mode 3.3 or 4.3 as defined in ISO 16750-1.
b	Operating mode 3.4 or 4.4 as defined in ISO 16750-1.
c	Operating mode 2.1 as defined in ISO 16750-1.
d	One cycle.
e	Functional test with operating mode 3.4 or 4.4 as defined in ISO 16750-1.

Figure 2 — Temperature cycle with specified change rate for the vibration test of large and heavy DUTs

Table 2 — Temperatures versus time duration for temperature cycling for the vibration test of large and heavy DUTs

Parameter	Duration [min]	Temperature [°C]
t_1	60	From RT to T_{min}
t_2	As agreed	Exposure time at T_{min}
t_3	60	From T_{min} to RT
t_4	90	From RT to T_{max}
t_5	As agreed	Exposure time at T_{max}
t_6	70	From T_{max} to RT
t_x	> 30	Dwell time at T_{min} or T_{max}
NOTE T_{min} and T_{max} are defined in ISO 16750-4:2023, Table 1.		

© ISO 2023 – All rights reserved

Documents
Document Sharing Hub
Full document details: BS ISO 16750-3:2023

4.1.1.2.4 Temperature profile for components mounted on the combustion engine

In case of combustion engine-mounted DUTs (e.g. ECUs) a dwell time at T_{min} as given in Table 1 can lead to a failure mode that is not occurring under field conditions as the combustion engine will warm up any attached components quickly, so that an extended superposition of vibration load and T_{min} is unrealistic. Therefore, the temperature profile shall be changed as given in Figure 3 and Table 3.

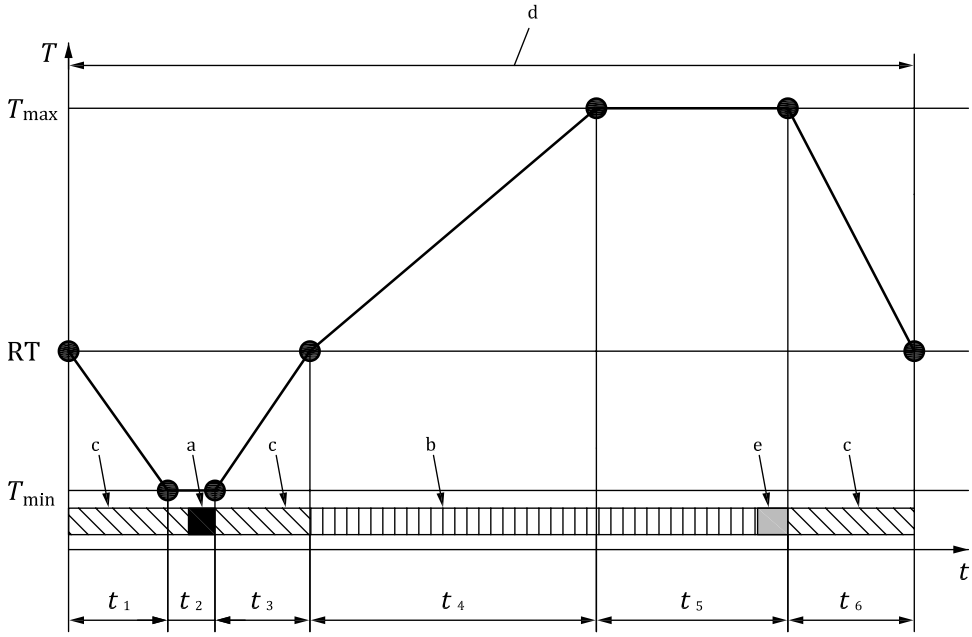

Key

T	temperature [°C]
t	time
T_{min}	minimum operating temperature as defined in ISO 16750-4
T_{max}	maximum operating temperature as defined in ISO 16750-4
RT	room temperature as defined in ISO 16750-1
t_1, t_2, t_3, t_4, t_5, t_6	time parameter as defined in Table 3
a	Functional test with operating mode 3.3 or 4.3 as defined in ISO 16750-1.
b	Operating mode 3.4 or 4.4 as defined in ISO 16750-1.
c	Operating mode 2.1 as defined in ISO 16750-1.
d	One cycle.
e	Functional test with operating mode 3.4 or 4.4 as defined in ISO 16750-1.

Figure 3 — Temperature cycle for DUTs mounted on the combustion engine

Table 3 — Temperatures versus time duration for temperature cycling for the vibration test of a combustion engine-mounted DUT

Parameter	Duration [min]	Temperature [°C]
t_1	60	From RT to T_{min}
t_2	20	Exposure time at T_{min}
t_3	60	From T_{min} to RT
NOTE 1 T_{min} and T_{max} are defined in ISO 16750-4:2023, Table 1.		
NOTE 2 The exposure time at T_{min}, t_2, can be shortened if agreed between the customer and the supplier based on justification from their field experience.		

© ISO 2023 – All rights reserved
Documents
Document Sharing Hub
Full document details: BS ISO 16750-3:2023

Table 3 *(continued)*

Parameter	Duration [min]	Temperature [°C]
t_4	160	From RT to T_{max}
t_5	110	Exposure time at T_{max}
t_6	70	From T_{max} to RT

NOTE 1 T_{min} and T_{max} are defined in ISO 16750-4:2023, Table 1.

NOTE 2 The exposure time at T_{min}, t_2, can be shortened if agreed between the customer and the supplier based on justification from their field experience.

Similar to the profile given in Table 1 also for the overlaid temperature profile for a combustion engine-mounted DUT, a short functional test at the end of the low temperature phase shall be done as well as for the duration in which room temperature or above is given. If experience from the field justifies to change the exposure time at T_{min} to avoid unrealistic failure modes during shaker testing, then this exposure time shall be adjusted accordingly.

4.1.2 Test Ia - Passenger car, combustion engine, small and lightweight DUT

4.1.2.1 Purpose

This test checks the small and lightweight DUT (e.g. small sensors and ECUs) for malfunctions and breakage caused by vibration.

The vibrations of a piston engine can be split up into two kinds: sinusoidal vibration which results from the unbalanced mass forces in the cylinders and random noise due to all other vibration-schemes of an engine, e.g. closing of valves. In the lowest frequency range from 10 Hz to 100 Hz the influence of rough-road conditions is taken into account. The main failure to be identified by this test is breakage due to fatigue.

NOTE 1 Road profile usually has a negligible impact on combustion engine-mounted components. Shock inputs are effectively isolated by suspension, and combustion engine-mounting systems.

The test profiles specified in the following clauses apply to loads generated by (four stroke) reciprocating combustion engines.

NOTE 2 If the DUT is to be tested for a specific resonance effect, then a resonance dwell test according to IEC 60068-2-6:2007, 8.3.2 can also be applied.

4.1.2.2 Test

4.1.2.2.1 General

This test shall be performed as a mixed mode vibration test according to IEC 60068-2-80.

4.1.2.2.2 Sinusoidal vibration

Perform the test according to IEC 60068-2-6, but using a sweep rate of ≤ 0,5 octave/min. Use a test duration of 30 h for each axis of the DUT.

NOTE The test duration is based on A.4.

Use curve 1 in Table 4/Figure 4 for the DUT intended for mounting on combustion engines with five cylinders or fewer.

Use curve 2 in Table 4/Figure 4 for the DUT test intended for mounting on combustion engines with six cylinders or more.

Both curves may be combined to cover all combustion engine types in one test.

© ISO 2023 – All rights reserved

Documents
Document Sharing Hub
Full document details: BS ISO 16750-3:2023

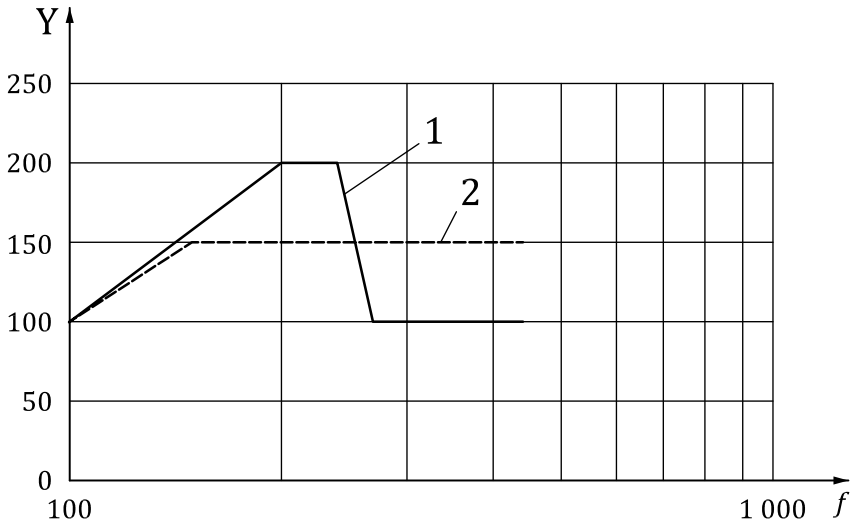

Key

Y amplitude of acceleration [m/s^2]

f frequency [Hz]

1 curve 1 (≤5 cylinders)

2 curve 2 (≥6 cylinders)

Figure 4 — Acceleration versus frequency

Table 4 — Values for acceleration versus frequency

Curve 1 (see Figure 4)	
Frequency [Hz]	**Amplitude of acceleration** [m/s^2]
100	100
200	200
240	200
270	100
440	100
Curve 2 (see Figure 4)	
Frequency [Hz]	**Amplitude of acceleration** [m/s^2]
100	100
150	150
440	150
Combination	
Frequency [Hz]	**Amplitude of acceleration** [m/s^2]
100	100
200	200
240	200
255	150
440	150

© ISO 2023 – All rights reserved

Documents
Document Sharing Hub

Full document details: BS ISO 16750-3:2023

4.1.2.2.3 Random vibration

Perform the test according to IEC 60068-2-64. Use a test duration of 30 h for each axis of the DUT.

The root mean square (RMS) acceleration value shall be 181 m/s^2.

Values for power spectral density (PSD) versus frequency are referred to in Figure 5 and Table 5.

NOTE The PSD values (random vibration) are reduced in the frequency range of the sinusoidal vibration test.

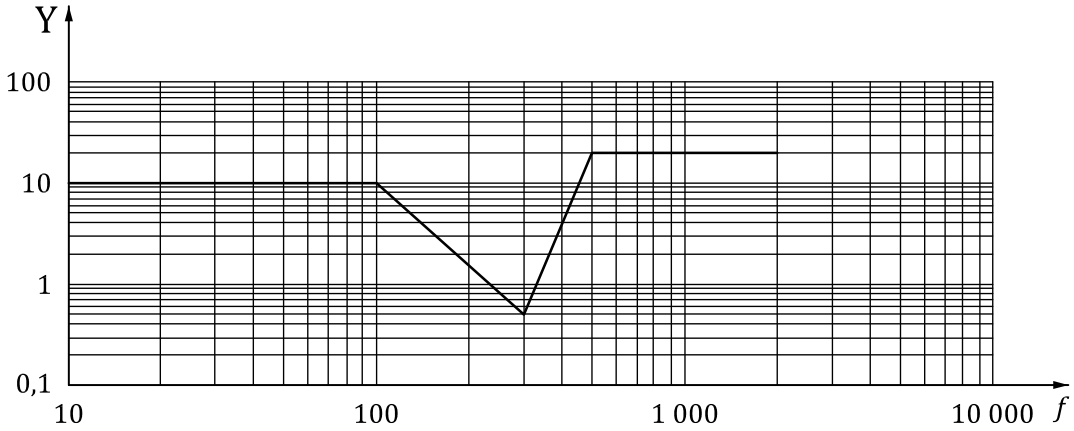

Key

Y PSD [(m/s^2)^2/Hz]

f frequency [Hz]

Figure 5 — PSD of acceleration versus frequency

Table 5 — Values for PSD versus frequency

Frequency [Hz]	PSD [(m/s^2)^2/Hz]
10	10
100	10
300	0,51
500	20
2 000	20

4.1.2.3 Requirement

Malfunctions or breakage shall not occur. Functional status class A as defined in ISO 16750-1 is required during active operating modes, and functional status class C is required during periods with other operating modes.

4.1.3 Test II — Passenger car, gearbox attached to a combustion engine, small and lightweight DUT

4.1.3.1 Purpose

This test checks the small and lightweight DUT (e.g. small sensors or transmission control units) for malfunctions and breakage caused by vibration.

The vibrations of a gearbox can be split up into two kinds which result partly from sinusoidal vibration from unbalanced mass forces of the combustion engine (e.g. dominating orders) in the frequency range

© ISO 2023 – All rights reserved

AVA Documents Document Sharing Hub
Full document details: BS ISO 16750-3:2023

from 100 Hz to 440 Hz and partly from vibration from the friction of the gear wheels and other schemes, which are tested in the random part. In the lowest frequency range from 10 Hz to 100 Hz the influence of rough-road conditions is taken into account. The main failure to be identified by this test is breakage due to fatigue.

The test profiles specified in the following subclauses apply to loads generated by gearbox vibrations. Changing the gears can create additional mechanical shock and is tested in 4.2.3.

4.1.3.2 Test

4.1.3.2.1 General

This test shall be performed as a mixed mode vibration test according to IEC 60068-2-80.

NOTE The test duration is based on A.4. The temperature in the chamber is above RT at the end of the test (3 ¾ temperature cycles).

4.1.3.2.2 Sinusoidal vibration

Perform the test according to IEC 60068-2-6, but using a sweep rate of ≤0,5 octave/min. Use a test duration of 30 h for each axis of the DUT.

Values for amplitude versus frequency are referred to in Figure 6 and Table 6.

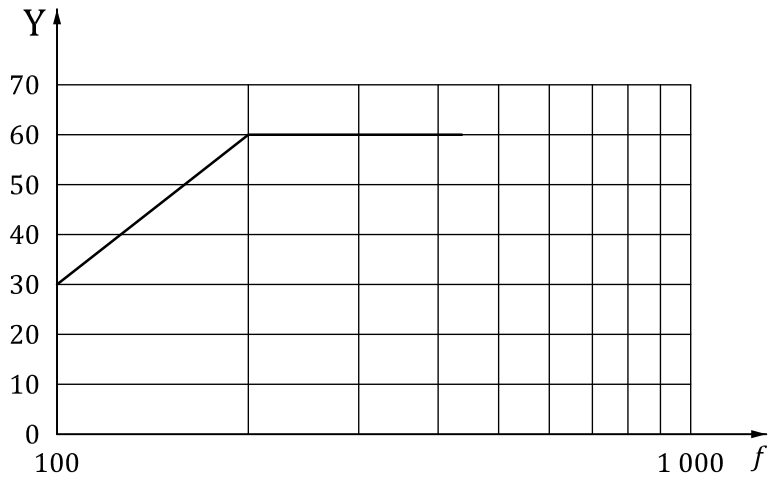

Key

Y amplitude of acceleration [m/s^2]

f frequency [Hz]

Figure 6 — Acceleration versus frequency

Table 6 — Values for acceleration versus frequency

Frequency [Hz]	Amplitude of acceleration [m/s^2]
100	30
200	60
440	60

4.1.3.2.3 Random vibration

Perform the test according to IEC 60068-2-64. Use a test duration of 30 h for each axis of the DUT.

© ISO 2023 – All rights reserved
Documents Document Sharing Hub
Full document details: BS ISO 16750-3:2023

The RMS acceleration value shall be 96,6 m/s^2.

NOTE The PSD values (random vibration) are reduced in the frequency range of the sinusoidal vibration test.

Values for PSD versus frequency are referred to in Figure 7 and Table 7.

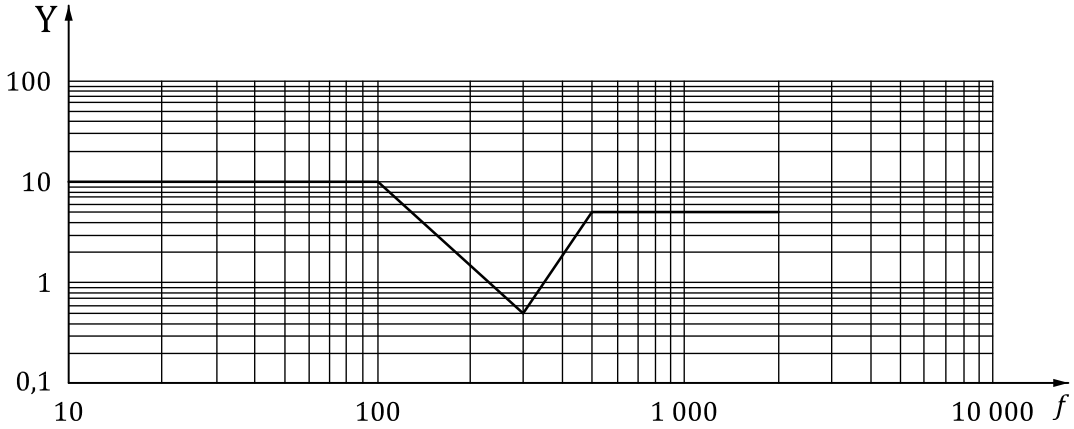

Key

Y PSD [(m/s^2)^2/Hz]

f frequency [Hz]

Figure 7 — PSD of acceleration versus frequency

Table 7 — Values for PSD versus frequency

Frequency [Hz]	**PSD** [(m/s^2)^2/Hz]
10	10
100	10
300	0,51
500	5
2 000	5

4.1.3.3 Requirement

Malfunctions and/or breakage shall not occur. Functional status class A as defined in ISO 16750-1 is required during active operating modes, and functional status class C is required during periods with other operating modes.

4.1.4 Test VI — Commercial vehicle, combustion engine and gearbox, small and lightweight DUT

4.1.4.1 Purpose

This test checks the small and lightweight DUT (such as small sensors or ECUs) for malfunctions and breakage caused by vibration.

The vibrations of a piston-engine can be split up into two kinds: sinusoidal vibration which results from unbalanced mass forces and random noise due to all other vibration sources of an engine, e.g. closing of valves.

© ISO 2023 – All rights reserved

Documents
Document Sharing Hub
Full document details: BS ISO 16750-3:2023

Because the gearbox is rigidly attached to the combustion engine, this test can also be used for systems/components mounted at the gearbox. But there is no sufficient number of measurements on gearbox-mounted systems/components performed up to now.

The main failure to be identified by this test is breakage due to fatigue.

If the DUT has natural frequencies below 30 Hz, an additional test (see Table 10) is to be carried out with a duration of 32 h in all critical axes of the DUT. When it is required to determine the natural frequency of the DUT in the relevant test specification, the vibration response investigation shall be carried out according to IEC 60068-2-6, but using a frequency range of 10 Hz to 50 Hz with an acceleration amplitude of 10 m/s^2 as excitation at a sweep rate of ≤0,5 octave/min.

4.1.4.2 Test

4.1.4.2.1 General

This test shall be performed as a mixed mode vibration test according to IEC 60068-2-80.

NOTE The temperature in the chamber is above RT at the end of the test (11 ¾ cycles).

4.1.4.2.2 Sinusoidal vibration

Perform the test according to IEC 60068-2-6, but using a sweep rate of ≤0,5 octave/min. Use a test duration of 94 h for each axis of the DUT (equivalent to approximatively 20 h per octave). This is equivalent to 10^7 cycles in resonance in case of resonance bandwidth of 100 Hz or more. See Table A.5.

Values for amplitude versus frequency are referred to in Figure 8 and Table 8.

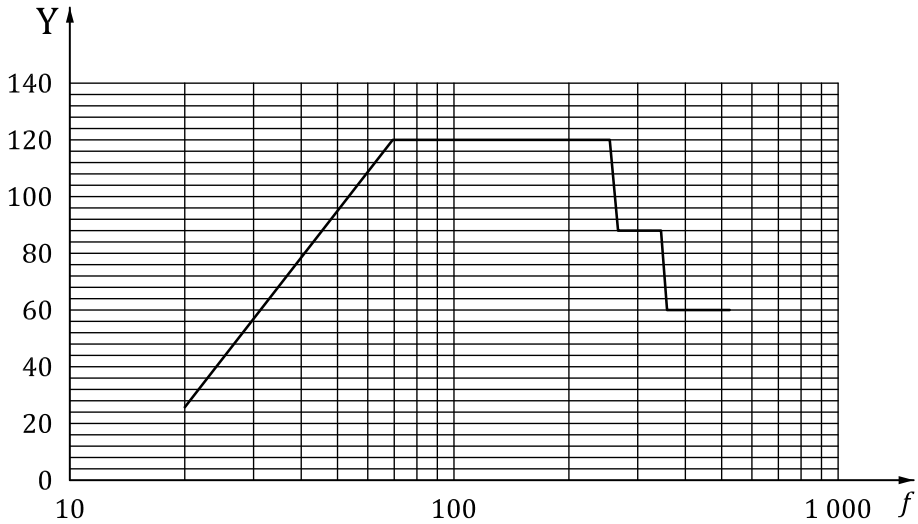

Key

Y amplitude of acceleration [m/s^2]

f frequency [Hz]

Figure 8 — Acceleration versus frequency

Table 8 — Values for acceleration versus frequency

Frequency [Hz]	Amplitude of acceleration [m/s^2]
20	26
65	120

© ISO 2023 – All rights reserved
Documents
Document Sharing Hub
Full document details: BS ISO 16750-3:2023

Table 8 *(continued)*

Frequency [Hz]	**Amplitude of acceleration** [m/s^2]
260	120
270	90
350	90
360	60
520	60

NOTE The sinusoidal profile given in previous editions of this document has been modified in three aspects. A higher amplitude of acceleration at the starting frequency was applied as even modern controllers have difficulty distinguishing the sine and random part of the SoR (sine on random) signal at this frequency. Therefore, the sine part was raised reasonably. Secondly, instead of a constant slope of displacement, now a constant slope of acceleration was applied from this first break point to the second. And lastly, instead of vertical slopes at 260 Hz and 350 Hz, slightly more shallow slopes were applied to allow for better control of the signal by the controllers.

4.1.4.2.3 Random vibration

Perform the test according to IEC 60068-2-64.

Test duration:

— 94 h for each axis of the DUT (standard) (see Figure 9 and Table 9),

— 32 h additionally for each critical axis of the DUT (for natural frequencies below 30 Hz) (see Table 10).

NOTE The PSD values (random vibration) are reduced in the frequency range of the sinusoidal vibration test.

The PSD versus frequency is referred to in Figure 9 and Table 9.

© ISO 2023 – All rights reserved

Documents
Document Sharing Hub
Full document details: BS ISO 16750-3:2023

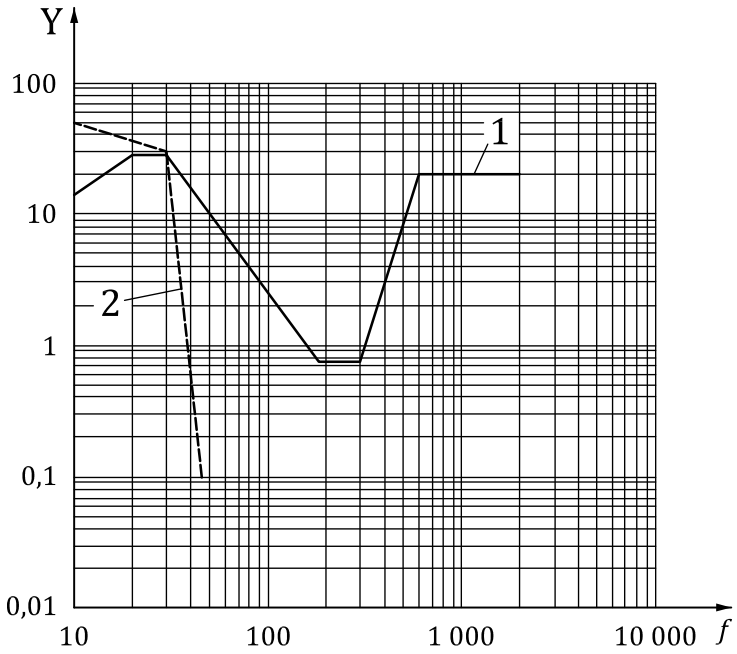

Key

Y PSD [(m/s²)²/Hz]

f frequency [Hz]

1 standard random test profile

2 additional profile in case of f_n < 30 Hz

Figure 9 — PSD of acceleration versus frequency

Table 9 — Values for PSD versus frequency

Frequency [Hz]	**PSD** [(m/s²)²/Hz]
10	14
20	28
30	28
180	0,75
300	0,75
600	20
2 000	20
RMS acceleration value = 177 m/s².	

Table 10 — Values for PSD versus frequency, additional test in case of natural frequencies f_n of DUT below 30 Hz

Frequency [Hz]	**PSD** [(m/s²)²/Hz]
10	50
30	30
45	0,1
RMS acceleration value = 28,6 m/s².	

© ISO 2023 – All rights reserved

Documents
Document Sharing Hub

Full document details: BS ISO 16750-3:2023

4.1.4.3 Requirement

Malfunctions and/or breakage shall not occur. Functional status class A as defined in ISO 16750-1 is required during active operating modes, and functional status class C is required during periods with other operating modes.

4.1.5 Test XIII — Passenger car, hybrid-electric powertrain, combustion engine and gearbox, large and heavy DUT

4.1.5.1 Purpose

This test checks the large and heavy DUT of the hybrid-electric powertrain (e.g. electric motors or inverters) that is mounted to the combustion engine and/or gearbox of the (P)HEV for malfunctions and/or breakage caused by vibration.

The vibrations on the powertrain can be split up into three kinds:

— sinusoidal vibration that results from the unbalanced mass forces in the cylinders;

— random vibration due to all other vibration schemes of an engine, e.g. closing of valves; and

— random vibration due to the influence of rough-road conditions.

NOTE 1 If the DUT needs to be tested for a specific resonance effect, then a resonance dwell test in accordance with IEC 60068-2-6:2007, 8.3.2 can also be applied.

NOTE 2 This profile is an updated version of Test II in ISO 19453-3:2018, 4.1.2.2, see also A.9.2.

4.1.5.2 Test

4.1.5.2.1 General

Vibration of powertrain is the sine-on-random vibration induced by crankshaft rotation and engine combustion. A separate test condition covers random vibration from road surface. The test duration shall be at least as long as one temperature cycle necessary to ensure thermal stability in the DUT.

NOTE 1 The test duration is based on A.4.3 and A.4.5. The test duration and vibration load level can be adjusted accordingly based on the Basquin's formula given in A.8.

NOTE 2 When agreed between the supplier and the customer, the test duration can be adjusted based on Basquin's model by taking into account the exponent k of the S-N curve specific to this component (see also A.8). For the component which is freely placed or is not anticipated to be installed in a certain position and orientation (e.g. inverter), the maximum profile out of all three axes can be applied to all three axes.

NOTE 3 As the driveshaft of an electric motor is always parallel to the ground floor, it is reasonable to have a direction-specific profile, separating vertical excitations from horizontal ones.

The definition of the coordinate system is shown in Table A.4.

4.1.5.2.2 Sine-on-random vibration

4.1.5.2.2.1 General

This test shall be performed as a mixed mode vibration test in accordance with IEC 60068-2-80.

4.1.5.2.2.2 Sinusoidal vibration part

A sweep rate of 0,5 octave/min or less shall be used.

The test duration is 30 h for each axis of the DUT.

© ISO 2023 – All rights reserved

Documents
Document Sharing Hub
Full document details: BS ISO 16750-3:2023

The profiles in Table 11 and Figure 10 show the sinusoidal vibration part of the sine-on-random profile.

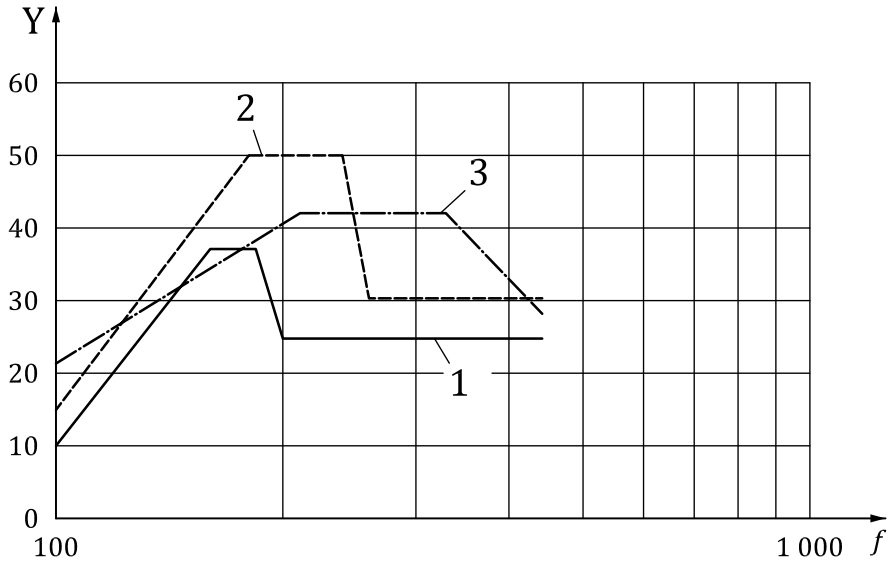

Key

Y acceleration amplitude [m/s^2]

f frequency [Hz]

1 curve for X axis [a]

2 curve for Y axis [a]

3 curve for Z axis [a]

[a] X, Y and Z are the e-motor axes as defined in Table A.4.

Figure 10 — Acceleration versus frequency

Table 11 — Values for maximum acceleration versus frequency

X axis		Y axis		Z axis	
Frequency [Hz]	Acceleration amplitude [m/s^2]	Frequency [Hz]	Acceleration amplitude [m/s^2]	Frequency [Hz]	Acceleration amplitude [m/s^2]
100	10	100	15	100	21
160	37	180	50	210	42
185	37	240	50	330	42
200	25	260	30	440	28
440	25	440	30	—	—

4.1.5.2.2.3 Random vibration part

Perform the test in accordance with IEC 60068-2-64.

The test duration is 30 h for each axis of the DUT.

The RMS acceleration value shall be 68,7 m/s^2. For the random part of the sine-on-random profile, the vibration loads are equivalent for all three primary axes. Therefore, only one profile for all three axes shall be used.

© ISO 2023 – All rights reserved
Documents
Document Sharing Hub
Full document details: BS ISO 16750-3:2023

The power spectral density (PSD) versus frequency is illustrated in Figure 11 and Table 12.

NOTE The PSD values (random vibration) are reduced in the frequency range of the sinusoidal vibration test of (100 to 500) Hz as well as in the low-frequency range of (10 to 100) Hz as the rough-road influence has been eliminated (see A.4.5).

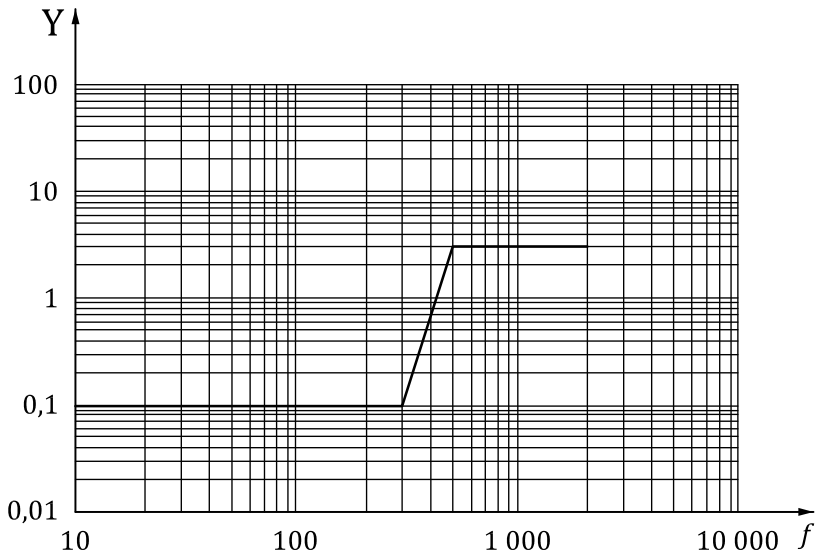

Key

Y PSD [(m/s^2)^2/Hz]

f frequency [Hz]

Figure 11 — PSD of acceleration versus frequency

Table 12 — Values for PSD versus frequency

Frequency [Hz]	**PSD** [(m/s^2)^2/Hz]
10	0,1
300	0,1
500	3
2 000	3

4.1.5.2.3 Random vibration

As the excitation from the combustion engine and gearbox at high engine speeds usually does not occur simultaneously with rough-road excitation, a separate test with a broadband random profile has been created.

In the lowest frequency range from 10 Hz to 100 Hz, the influence of rough-road conditions is taken into account. The main failures to be identified by this test are malfunctions and/or breakage due to fatigue.

This rough-road profile shall be applied to the very same DUT that has been submitted to the sine-on-random test described above. After the mixed mode vibration test, a random vibration test is performed in accordance with IEC 60068-2-64.

The test duration is 20 h for each axis of the DUT.

The RMS acceleration value for all three primary axes shall be 9 m/s^2.

The PSD versus frequency is illustrated in Figure 12 and Table 13.

© ISO 2023 – All rights reserved

Documents
Document Sharing Hub
Full document details: BS ISO 16750-3:2023

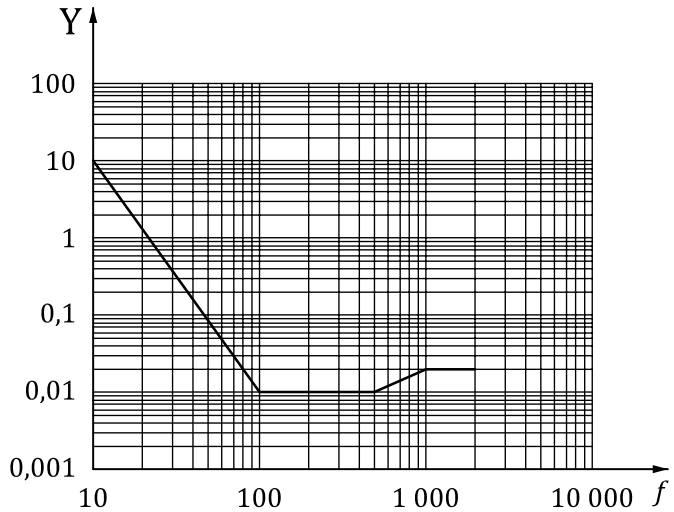

Key

Y PSD [(m/s^2)^2/Hz]

f frequency [Hz]

Figure 12 — PSD of acceleration versus frequency

Table 13 — Values for PSD versus frequency

Frequency [Hz]	**PSD** [(m/s^2)^2/Hz]
10	10
100	0,01
500	0,01
1 000	0,02
2 000	0,02

4.1.5.3 Requirements

Malfunctions and/or breakage shall not occur.

Functional status class A as defined in ISO 16750-1 is required during active operating modes, and functional status class C is required during periods with other operating modes.

4.1.6 Test XV — Passenger car, driving electric motor

4.1.6.1 Purpose

This test checks the large and heavy DUT (electric motor driving the wheels of the vehicle through a driveshaft, possibly via a gearbox; also components attached to the electric motor, such as an inverter) for malfunctions and/or breakage caused by vibration.

NOTE This profile is an updated version of Test II in ISO 19453-3:2018, 4.1.2.2, see also A.9.4.

© ISO 2023 – All rights reserved
Documents
Document Sharing Hub
Full document details: BS ISO 16750-3:2023

4.1.6.2 Test

4.1.6.2.1 General

Vibration of electric motors is the random vibration induced by rough-road driving. The main failure to be identified by this test is breakage due to fatigue.

NOTE 1 The test duration is based on A.5.1.2. According to Annex A, 20 h of test duration per axis are equivalent to 6 000 h (240 000 km at 40 km/h average speed) lifetime requirement of the vehicle.

NOTE 2 When the test conditions cannot be realized because the test system is not capable of exciting a heavy DUT with the given profile, the load and duration can be adjusted according to the Basquin model (see A.8).

NOTE 3 As the driveshaft of an electric motor is always parallel to the ground floor, it is reasonable to have a direction-specific profile, separating vertical excitations from horizontal ones.

NOTE 4 Besides rough road the second type of vibration for the e-powertrain is induced by imbalances of the e-motor and harmonic orders of the gearbox. If considering such a vibration in evaluation, a separate sinusoidal test can be agreed between the customer and the supplier, based on a vehicle or test bench measurement.

The definition of the coordinate system is shown in Table A.4.

4.1.6.2.2 Random vibration

Perform the test in accordance with IEC 60068-2-64 (random vibration).

The test duration is 20 h for each axis of the DUT.

The RMS acceleration values for all three primary axes shall be:

— X: 38,9 m/s^2,

— Y: 24,5 m/s^2,

— Z: 39,0 m/s^2.

The PSD versus frequency is illustrated in Figure 13 and Table 14.

For the component which is freely placed or is not anticipated to be installed in a certain position and posture (e.g. inverter), the maximum profile out of all primary three axes shall be applied to each axis of the DUT.

Instead of the maximum profile for all three primary axes, based on the actual vehicle application(s) an enveloping of just two out of three directions may be applied if agreed between the customer and the supplier.

© ISO 2023 – All rights reserved

Documents
Document Sharing Hub
Full document details: BS ISO 16750-3:2023

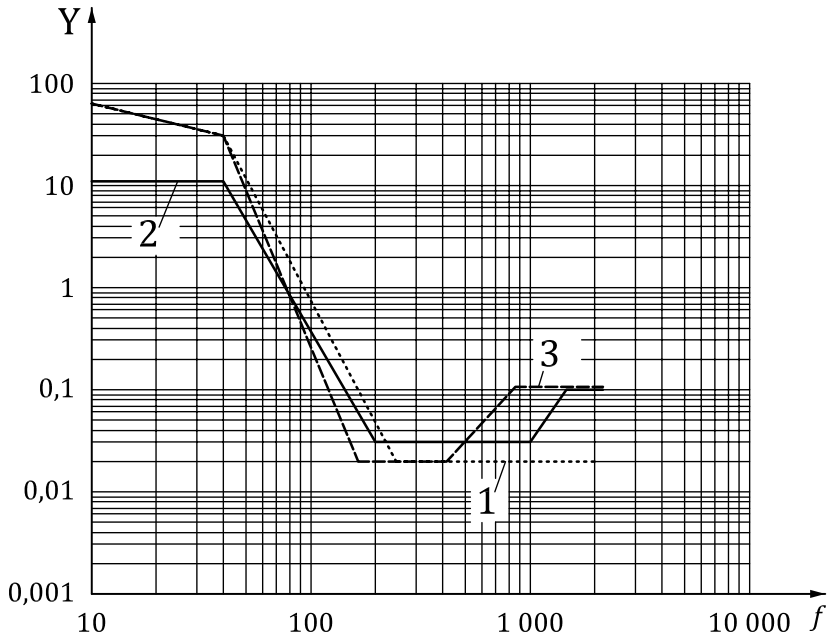

Key

Y PSD [(m/s²)²/Hz]

f frequency [Hz]

1 curve for X axis [a]

2 curve for Y axis [a]

3 curve for Z axis [a]

[a] X, Y and Z are the e-motor axes as defined in Table A.4.

Figure 13 — PSD of acceleration versus frequency

Table 14 — Values for PSD versus frequency

X axis		Y axis		Z axis	
Frequency [Hz]	**PSD** [(m/s²)²/Hz]	**Frequency** [Hz]	**PSD** [(m/s²)²/Hz]	**Frequency** [Hz]	**PSD** [(m/s²)²/Hz]
10	55	10	11	10	55
40	28	40	11	40	28
240	0,02	200	0,03	160	0,02
2 000	0,02	1 000	0,03	400	0,02
		1 400	0,1	800	0,1
		2 000	0,1	2 000	0,1

4.1.6.3 Requirements

Malfunction and/or breakage shall not occur.

Functional status class A as defined in ISO 16750-1 is required during active operating modes, and functional status class C is required during periods with other operating modes.

© ISO 2023 – All rights reserved

Documents
Document Sharing Hub

Full document details: BS ISO 16750-3:2023

4.1.7 Test XVII — Commercial vehicle, driving electric motor

4.1.7.1 Purpose

This test checks the large and heavy DUT (electric motor driving the wheels of the vehicle through a driveshaft, possibly via a gearbox; also components attached to the electric motor, such as an inverter) for malfunctions and/or breakage caused by vibration.

4.1.7.2 Test

4.1.7.2.1 General

Vibration of electric motors is the random vibration induced by rough-road driving. The main failure to be identified by this test is breakage due to fatigue.

NOTE 1 The test duration is based on an infinite-life approach in order to be independent of the lifetime requirement of the commercial vehicle in analogy to 4.1.9.2.

NOTE 2 When the test conditions cannot be realized because the test system is not capable of exciting a heavy DUT with the given profile, the load and duration can be adjusted according to the Basquin model (see A.8).

NOTE 3 As the driveshaft of an electric motor is always parallel to the ground floor, it is reasonable to have a direction-specific profile, separating vertical excitations from horizontal ones.

The definition of the coordinate system is shown in Table A.4.

4.1.7.2.2 Random vibration

Perform the test in accordance with IEC 60068-2-64 (random vibration).

The test duration is 32 h for each axis of the DUT. For more information on the test duration see A.7.

The RMS acceleration values for all three primary axes shall be:

— X and Y: 26,8 m/s^2,

— Z: 37,2 m/s^2.

The PSD versus frequency is illustrated in Figure 14 and Table 15.

The profile for Z-axis with the highest RMS value may be used for all three primary axes if agreed between the customer and the supplier.

© ISO 2023 – All rights reserved

Documents
Document Sharing Hub
Full document details: BS ISO 16750-3:2023

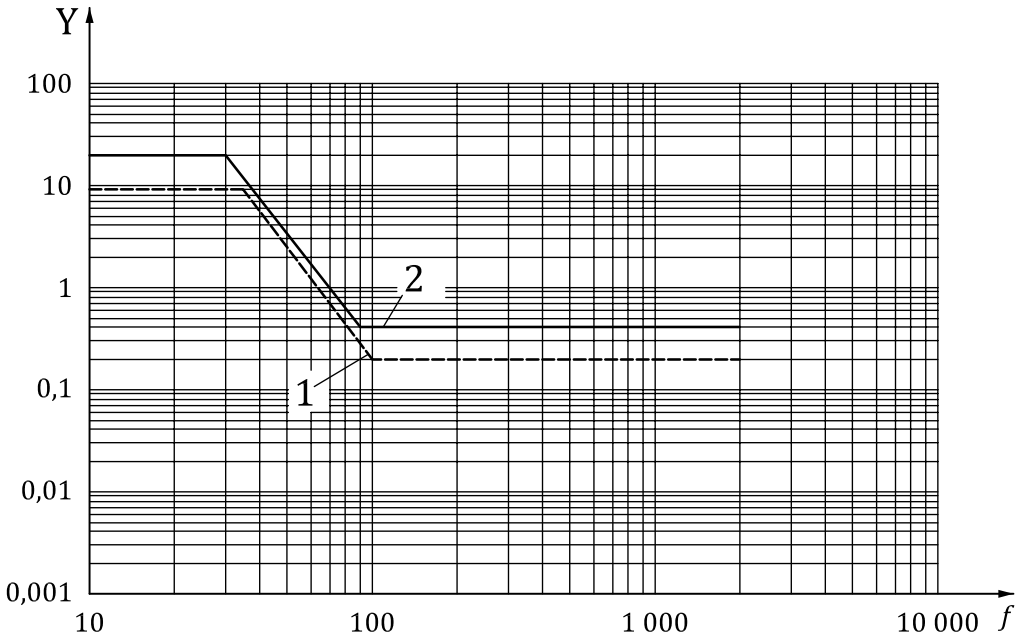

Key

Y PSD [(m/s²)²/Hz]

f frequency [Hz]

1 curve for X and Y axis [a]

2 curve for Z axis [a]

[a] X, Y and Z are the e-motor axes as defined in Table A.4.

Figure 14 — PSD of acceleration versus frequency

Table 15 — Values for PSD versus frequency

X and Y axis		Z axis	
Frequency [Hz]	**PSD** [(m/s²)²/Hz]	**Frequency** [Hz]	**PSD** [(m/s²)²/Hz]
10	9	10	20
35	9	30	20
100	0,2	90	0,4
2 000	0,2	2 000	0,4

4.1.7.3 Requirements

Malfunction and/or breakage shall not occur.

Functional status class A as defined in ISO 16750-1 is required during active operating modes, and functional status class C is required during periods with other operating modes.

4.1.8 Test IV — Passenger car, sprung masses (vehicle body), small and lightweight DUT

4.1.8.1 Purpose

This test checks the small and lightweight DUT (e.g. small sensors or ECUs) for malfunctions and breakage caused by vibration.

© ISO 2023 – All rights reserved
Documents
Document Sharing Hub
Full document details: BS ISO 16750-3:2023

Vibration of the body is random vibration induced by rough-road driving. The main failure to be identified by this test is breakage due to fatigue.

4.1.8.2 Test

Perform the test according to IEC 60068-2-64 random vibration. Use a test duration of 8 h for each axis of the DUT.

The RMS acceleration value shall be 27,1 m/s^2.

The PSD versus frequency is referred to in Figure 15 and Table 16.

NOTE The test duration is based on A.5.1.2.

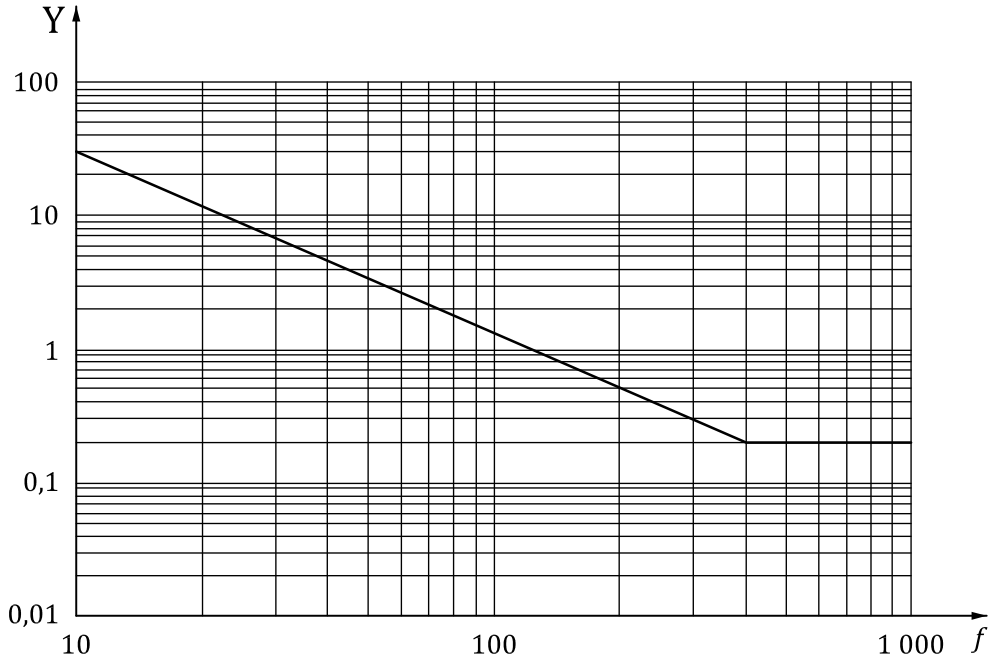

Key

Y PSD [(m/s^2)^2/Hz]

f frequency [Hz]

Figure 15 — PSD of acceleration versus frequency

Table 16 — Values for PSD versus frequency

Frequency [Hz]	**PSD** [(m/s^2)^2/Hz]
10	30
400	0,2
1 000	0,2

In Annex E a general methodology is described on how to derive a broadband random test profile for small and lightweight DUTs on the vehicle-body of passenger cars for testing on an electrodynamic 3D shaker system, including an example.

© ISO 2023 – All rights reserved

Documents
Document Sharing Hub
Full document details: BS ISO 16750-3:2023

4.1.8.3 Requirement

Malfunctions and/or breakage shall not occur. Functional status class A as defined in ISO 16750-1 is required during active operating modes, and functional status class C is required during periods with other operating modes.

4.1.9 Test VII — Commercial vehicle, sprung mass (vehicle body), small and lightweight DUT

4.1.9.1 Purpose

This test checks the small and lightweight DUT (e.g. small sensors or ECUs) for malfunctions and breakage caused by vibration.

Vibration on sprung masses is random vibration induced by rough-road driving. The main failure to be identified by this test is breakage due to fatigue.

4.1.9.2 Test

Perform the test according to IEC 60068-2-64, random vibration. Use a test duration of 32 h for each axis of the DUT. For more information on the test duration see A.7.

The PSD versus frequency is referred to in Figure 16 and Table 17.

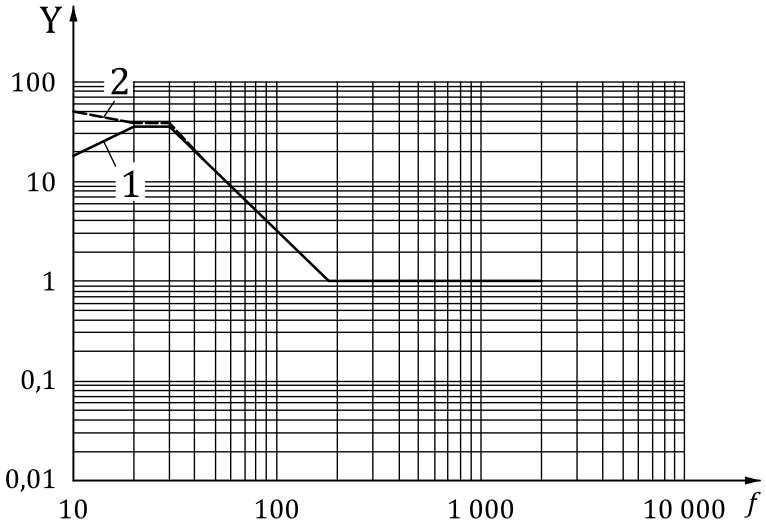

Key

Y PSD [(m/s^2)^2/Hz]

f frequency [Hz]

1 standard random test profile

2 additional profile in case of f_n < 30 Hz

Figure 16 — PSD of acceleration versus frequency

© ISO 2023 – All rights reserved

Documents
Document Sharing Hub
Full document details: BS ISO 16750-3:2023

Table 17 — Values for PSD versus frequency

Frequency [Hz]	PSD [(m/s²)²/Hz]
10	18
20	36
30	36
180	1
2 000	1
RMS acceleration value = 57,9 m/s².	

If the DUT has natural frequencies below 30 Hz, an additional test (see Table 18) shall be carried out with a duration of 32 h in all critical axes of the DUT. When it is required to determine the natural frequency of the DUT in the relevant test specification, the vibration response investigation shall be carried out according to IEC 60068-2-6, but using a frequency range of 10 Hz to 50 Hz with an acceleration amplitude of 10 m/s² as excitation at a sweep rate of ≤0,5 octave/min.

Table 18 — Values for PSD versus frequency, additional test in case of natural frequencies f_n of DUT below 30 Hz

Frequency [Hz]	PSD [(m/s²)²/Hz]
10	50
20	36
30	36
45	16
RMS acceleration value = 33,7 m/s².	

4.1.9.3 Requirement

Malfunctions and/or breakage shall not occur. Functional status class A as defined in ISO 16750-1 is required during active operating modes, and functional status class C is required during periods with other operating modes.

4.1.10 Test XIV — Hybrid-electric/fully-electric passenger car, sprung mass (vehicle body), large and heavy DUT

4.1.10.1 Purpose

This test checks the large and heavy DUT of the electric powertrain (e.g. inverters, DC/DC converters or chargers) on the vehicle body for malfunctions and/or breakage caused by vibration.

NOTE This profile is an updated version of Test II in ISO 19453-3:2018, 4.1.2.2, see also A.9.3.

4.1.10.2 Test

4.1.10.2.1 General

Vibration of the vehicle body is the random vibration induced by rough-road driving. The main failure to be identified by this test is breakage due to fatigue.

NOTE 1 The test duration is based on A.5.1.2. According to Annex A, 20 h of test duration per axis are equivalent to 6 000 h (240 000 km at 40 km/h average speed) lifetime requirement of the vehicle.

AVA Documents
Document Sharing Hub

© ISO 2023 – All rights reserved

Full document details: BS ISO 16750-3:2023