BS ISO 16750-4:2023

BSI Standards Publication

Road vehicles — Environmental conditions and testing for electrical and electronic equipment

Part 4: Climatic loads

Documents
Document Sharing Hub

Full document details: BS ISO 16750-4:2023

National foreword

This British Standard is the UK implementation of ISO 16750-4:2023. It supersedes BS ISO 16750-4:2010, which is withdrawn.

The UK participation in its preparation was entrusted to Technical Committee AUE/32, Electrical and electronic components and general system aspects (Road vehicles).

A list of organizations represented on this committee can be obtained on request to its committee manager.

Contractual and legal considerations

This publication has been prepared in good faith, however no representation, warranty, assurance or undertaking (express or implied) is or will be made, and no responsibility or liability is or will be accepted by BSI in relation to the adequacy, accuracy, completeness or reasonableness of this publication. All and any such responsibility and liability is expressly disclaimed to the full extent permitted by the law.

This publication is provided as is, and is to be used at the recipient's own risk.

The recipient is advised to consider seeking professional guidance with respect to its use of this publication.

This publication is not intended to constitute a contract. Users are responsible for its correct application.

© The British Standards Institution 2023
Published by BSI Standards Limited 2023

ISBN 978 0 539 04085 2

ICS 43.040.10

Compliance with a British Standard cannot confer immunity from legal obligations.

This British Standard was published under the authority of the Standards Policy and Strategy Committee on 31 July 2023.

Amendments/corrigenda issued since publication

Date	Text affected

Documents
Document Sharing Hub

Full document details: BS ISO 16750-4:2023

INTERNATIONAL STANDARD

ISO 16750-4

Fourth edition
2023-07

Road vehicles — Environmental conditions and testing for electrical and electronic equipment —

Part 4: Climatic loads

Véhicules routiers — Spécifications d'environnement et essais de l'équipement électrique et électronique —

Partie 4: Contraintes climatiques

Reference number
ISO 16750-4:2023(E)

Documents
Document Sharing Hub
© ISO 2023

Full document details: BS ISO 16750-4:2023

COPYRIGHT PROTECTED DOCUMENT

© ISO 2023

All rights reserved. Unless otherwise specified, or required in the context of its implementation, no part of this publication may be reproduced or utilized otherwise in any form or by any means, electronic or mechanical, including photocopying, or posting on the internet or an intranet, without prior written permission. Permission can be requested from either ISO at the address below or ISO's member body in the country of the requester.

ISO copyright office
CP 401 • Ch. de Blandonnet 8
CH-1214 Vernier, Geneva
Phone: +41 22 749 01 11
Email: copyright@iso.org
Website: www.iso.org

Published in Switzerland

© ISO 2023 – All rights reserved

Documents
Document Sharing Hub

Full document details: BS ISO 16750-4:2023

Contents

Page

Foreword ... **v**

1 Scope ... **1**

2 Normative references ... **1**

3 Terms and definitions ... **2**

4 Operating temperature ranges ... **2**

5 Tests and requirements ... **4**

5.1 Tests at constant temperature ... 4
5.1.1 Low-temperature tests ... 4
5.1.2 High-temperature tests ... 4
5.2 Temperature step test ... 5
5.2.1 Purpose ... 5
5.2.2 Test method ... 5
5.2.3 Requirement ... 6
5.3 Temperature cycling tests ... 6
5.3.1 Temperature cycle with specified change rate ... 6
5.3.2 Rapid change of temperature with specified transition duration ... 13
5.4 Cold water shock tests ... 15
5.4.1 Purpose ... 15
5.4.2 Splash water test ... 15
5.4.3 Submersion test ... 19
5.5 Salt spray tests ... 20
5.5.1 General ... 20
5.5.2 Corrosion test ... 21
5.5.3 Leakage and function test ... 21
5.5.4 Salt spray active test for rotating machines with open housing ... 22
5.5.5 Salt spray combined cycle test ... 24
5.5.6 Cyclic corrosion test ... 26
5.6 Humid heat, cyclic tests ... 27
5.6.1 Purpose ... 27
5.6.2 Test method ... 27
5.6.3 Requirements ... 30
5.7 Damp heat, steady state test ... 30
5.7.1 Purpose ... 30
5.7.2 Test method ... 30
5.7.3 Requirements ... 30
5.8 Condensation test ... 31
5.8.1 Purpose ... 31
5.8.2 Test method ... 31
5.8.3 Requirement ... 35
5.9 Corrosion test with flow of mixed gas ... 35
5.9.1 Purpose ... 35
5.9.2 Test method ... 35
5.9.3 Requirement ... 35
5.10 Solar radiation test ... 35
5.10.1 Purpose ... 35
5.10.2 Test method ... 35
5.10.3 Requirements ... 36
5.11 Dust test ... 36
5.11.1 Purpose ... 36
5.11.2 Test method ... 36
5.11.3 Requirements ... 38
5.12 Atmospheric pressure test ... 38
5.12.1 Purpose ... 38

AVA Documents
Document Sharing Hub

© ISO 2023 – All rights reserved

Full document details: BS ISO 16750-4:2023

5.12.2 Test method ... 38
5.12.3 Requirements ... 39

6 Code for climatic loads ... **39**

7 Protection against water and foreign objects ... **41**

8 Documentation ... **41**

Annex A (informative) **Usual tests and requirements for equipment depending on the mounting location** ... **42**

Annex B (informative) **Background information to determine the number of cycles of the salt spray combined cycle test** ... **47**

Annex C (informative) **Insulation tests** ... **52**

Annex D (informative) **The necessity of testing atmospheric pressure** ... **55**

Bibliography ... **59**

© ISO 2023 – All rights reserved

Documents
Document Sharing Hub
Full document details: BS ISO 16750-4:2023

Foreword

ISO (the International Organization for Standardization) is a worldwide federation of national standards bodies (ISO member bodies). The work of preparing International Standards is normally carried out through ISO technical committees. Each member body interested in a subject for which a technical committee has been established has the right to be represented on that committee. International organizations, governmental and non-governmental, in liaison with ISO, also take part in the work. ISO collaborates closely with the International Electrotechnical Commission (IEC) on all matters of electrotechnical standardization.

The procedures used to develop this document and those intended for its further maintenance are described in the ISO/IEC Directives, Part 1. In particular, the different approval criteria needed for the different types of ISO document should be noted. This document was drafted in accordance with the editorial rules of the ISO/IEC Directives, Part 2 (see www.iso.org/directives).

ISO draws attention to the possibility that the implementation of this document may involve the use of (a) patent(s). ISO takes no position concerning the evidence, validity or applicability of any claimed patent rights in respect thereof. As of the date of publication of this document, ISO had not received notice of (a) patent(s) which may be required to implement this document. However, implementers are cautioned that this may not represent the latest information, which may be obtained from the patent database available at www.iso.org/patents. ISO shall not be held responsible for identifying any or all such patent rights.

Any trade name used in this document is information given for the convenience of users and does not constitute an endorsement.

For an explanation of the voluntary nature of standards, the meaning of ISO specific terms and expressions related to conformity assessment, as well as information about ISO's adherence to the World Trade Organization (WTO) principles in the Technical Barriers to Trade (TBT), see www.iso.org/iso/foreword.html.

This document was prepared by Technical Committee ISO/TC 22, *Road vehicles*, Subcommittee SC 32, *Electrical and electronic components and general system aspects*.

This fourth edition cancels and replaces the third edition (ISO 16750-4:2010), which has been technically revised.

The main changes are as follows:

— integration and harmonization of contents from ISO 19453-4:2018 (e.g. addition of 5.8 and 5.12);

— subdivision of test methods in temperature cycle test for application to DUTs of "small and lightweight" or "large and heavy" size (5.3);

— addition of test methods for large and heavy DUTs in cold water shock test (5.4);

— addition of three salt spray corrosion tests (5.5.4, 5.5.5 and 5.5.6);

— addition of concrete test method and requirements in solar radiation test (5.10);

— addition of optional test method in dust test for DUT installed in passenger compartment or luggage/load compartment (5.11);

— addition of new tests and the selection of applied cycles in rapid change of temperature with specified transition duration (Clause 6, Table 10);

— subdivision of mounting location defining the corresponding severities (Annex A);

— error correction (Annex B, Figure B.1, B.2 and Table B.1 taken over from ISO 19453-4:2018);

© ISO 2023 – All rights reserved

Documents
Document Sharing Hub
Full document details: BS ISO 16750-4:2023

— clarification of technical background to determine number of cycles and severities according to the mounting location (Annex B, Clause B.4);

— subdivision of electric isolation test methods for voltage class A and voltage class B (Annex C).

A list of all parts in the ISO 16750 series can be found on the ISO website.

Any feedback or questions on this document should be directed to the user's national standards body. A complete listing of these bodies can be found at www.iso.org/members.html.

© ISO 2023 – All rights reserved
Documents
Document Sharing Hub
Full document details: BS ISO 16750-4:2023

Road vehicles — Environmental conditions and testing for electrical and electronic equipment —

Part 4: Climatic loads

1 Scope

This document applies to electric and electronic systems and components for vehicles including electric propulsion systems and components with maximum working voltages according to voltage class B. It describes the potential environmental stresses and specifies tests and requirements recommended for the specific mounting location on/in the vehicle.

This document describes climatic loads.

This document is not intended to apply to environmental requirements or testing for systems and components of motorcycles and mopeds.

Systems and their components released for production, or systems and their components already under development prior to the publication date of this document, can be exempted from fulfilling the changes in this edition compared to the previous one.

2 Normative references

The following documents are referred to in the text in such a way that some or all of their content constitutes requirements of this document. For dated references, only the edition cited applies. For undated references, the latest edition of the referenced document (including any amendments) applies.

ISO 4892-2, *Plastics — Methods of exposure to laboratory light sources — Part 2: Xenon-arc lamps*

ISO 4892-3, *Plastics — Methods of exposure to laboratory light sources — Part 3: Fluorescent UV lamps*

ISO 4892-4, *Plastics — Methods of exposure to laboratory light sources — Part 4: Open-flame carbon-arc lamps*

ISO 9227:2022, *Corrosion tests in artificial atmospheres — Salt spray tests*

ISO 11997-3, *Paints and varnishes — Determination of resistance to cyclic corrosion conditions — Part 3: Testing of coating systems on materials and components in automotive construction*

ISO 16750-1, *Road vehicles — Environmental conditions and testing for electrical and electronic equipment — Part 1: General*

ISO 16750-2, *Road vehicles — Environmental conditions and testing for electrical and electronic equipment — Part 2: Electrical loads*

ISO 20653, *Road vehicles — Degrees of protection (IP code) — Protection of electrical equipment against foreign objects, water and access*

ISO 21498-1, *Electrically propelled road vehicles — Electrical specifications and tests for voltage class B systems and components — Part 1: Voltage sub-classes and characteristics*

ISO 21780, *Road vehicles — Supply voltage of 48 V — Electrical requirements and tests*

IEC 60068-1:2013, *Environmental testing — Part 1: General and guidance*

© ISO 2023 – All rights reserved

Documents
Document Sharing Hub
Full document details: BS ISO 16750-4:2023

IEC 60068-2-1:2007, *Environmental testing — Part 2-1: Tests — Test A: Cold*

IEC 60068-2-2:2007, *Environmental testing — Part 2-2: Tests — Test B: Dry heat*

IEC 60068-2-11:2021, *Basic environmental testing procedures — Part 2-11: Tests — Test Ka: Salt mist*

IEC 60068-2-14, *Environmental testing — Part 2-14: Tests — Test N: Change of temperature*

IEC 60068-2-30:2005, *Environmental testing — Part 2-30: Tests — Test Db: Damp heat, cyclic (12 h + 12 h cycle)*

IEC 60068-2-38, *Environmental testing — Part 2-38: Tests — Test Z/AD: Composite temperature/humidity cyclic test*

IEC 60068-2-52:2017, *Environmental testing — Part 2-52: Tests — Test Kb: Salt mist, cyclic (sodium chloride solution)*

IEC 60068-2-60:2015, *Environmental testing — Part 2-60: Tests — Test Ke: Flowing mixed gas corrosion test*

IEC 60068-2-78, *Environmental testing — Part 2-78: Tests — Test Cab: Damp heat, steady state*

IEC 60664-1:2020, *Insulation coordination for equipment within low-voltage systems — Part 1: Principles, requirements and tests*

3 Terms and definitions

For the purposes of this document, the terms and definitions given in ISO 16750-1 apply.

ISO and IEC maintain terminology databases for use in standardization at the following addresses:

— ISO Online browsing platform: available at https://www.iso.org/obp

— IEC Electropedia: available at https://www.electropedia.org/

4 Operating temperature ranges

Choose the applicable temperature range from Table 1 to be presented in the specifications of the DUT.

In the case of hot soak, choose from Table 2 the relative temperature increase ΔT_{HS} and add it to the maximum temperature T_{max} to have the absolute hot-soak temperature (T_{maxHS}).

$$T_{max} + \Delta T_{HS} = T_{maxHS}$$

For further details, refer to 5.3.1.

The paint repair temperature (T_{maxPR}) as defined in ISO 16750-1 can be set to a higher value than the operating temperature. Specify this temperature in the specifications of the DUT.

Table 1 — Operating temperature ranges

Code	Minimum operating temperature T_{min} [°C]	Maximum operating temperature T_{max} [°C]
A	−20	65
B	−30	65

© ISO 2023 – All rights reserved
Documents
Document Sharing Hub
Full document details: BS ISO 16750-4:2023

Table 1 *(continued)*

Code	Minimum operating temperature T_{min} [°C]	Maximum operating temperature T_{max} [°C]
C	−40	65
D		70
E		75
F		80
G		85
H		90
I		95
J		100
K		105
L		110
M		115
N		120
O		125
P		130
Q		140
R		150
S		155
T		160
U		165
V		170
W		175
X		180
Z	As agreed	

Table 2 — Relative temperature increase in hot soak

Code	ΔT_{HS} [°C]
a	15
b	30
c	50
z	As agreed

NOTE For DUTs with hot soak, the code letter is defined as a combination of Tables 1 and 2, e.g. Hb (T_{max} = 90 °C and ΔT_{HS} = 30 °C).

© ISO 2023 – All rights reserved

Documents
Document Sharing Hub
Full document details: BS ISO 16750-4:2023

5 Tests and requirements

5.1 Tests at constant temperature

5.1.1 Low-temperature tests

5.1.1.1 Storage test

5.1.1.1.1 Purpose

This test simulates the exposure of the systems/components to low temperatures without electrical operation, e.g. during shipment of the systems/components. The failure mode is a malfunction due to insufficient frost resistance, e.g. the freezing of a coolant.

5.1.1.1.2 Test method

Perform the test in accordance with IEC 60068-2-1:2007, 5.2, Test Ab, at a temperature of −40 °C for a duration of 24 h unless otherwise indicated in the DUT specification. The operating mode is 1.1 as defined in ISO 16750-1.

5.1.1.1.3 Requirement

The functional status shall be class C as defined in ISO 16750-1.

5.1.1.2 Operation test

5.1.1.2.1 Purpose

This test simulates the exposure of the systems/components to low temperatures with electrical operation, e.g. the use of the systems/components at very low ambient temperature. The failure mode is an electrical malfunction caused by low temperature, e.g. the freezing of capacitors with liquid electrolyte.

5.1.1.2.2 Test method

Perform the test in accordance with IEC 60068-2-1:2007, 5.2, Test Ab or 5.3, Test Ad, at a temperature of $T_{\min}$ for a duration of 24 h. Test Ab is applied for non-heat-dissipating DUTs and Test Ad is applied for heat-dissipating DUTs. The operating mode is 3.3 or 4.3 as defined in ISO 16750-1.

5.1.1.2.3 Requirement

The functional status shall be class A as defined in ISO 16750-1.

5.1.2 High-temperature tests

5.1.2.1 Storage test

5.1.2.1.1 Purpose

This test simulates the exposure of the systems/components to high temperatures without electrical operation, e.g. during the shipment of the systems/components. The failure mode is insufficient heat resistance, e.g. warping of plastic housings.

© ISO 2023 – All rights reserved
Documents
Document Sharing Hub
Full document details: BS ISO 16750-4:2023

5.1.2.1.2 Test method

Perform the test in accordance with IEC 60068-2-2:2007, 5.2, Test Bb, at a temperature of 85 °C for a duration of 48 h unless otherwise indicated in the DUT specification. The operating mode is 1.1 as defined in ISO 16750-1.

5.1.2.1.3 Requirement

The functional status shall be class C as defined in ISO 16750-1.

5.1.2.2 Operation test

5.1.2.2.1 Purpose

This test simulates the exposure of the systems/components to high temperatures with electrical operation, e.g. the use of the systems/components at very high ambient temperature. The failure mode is an electrical malfunction caused by high temperature, e.g. thermal degradation of components.

5.1.2.2.2 Test method

Perform the test in accordance with IEC 60068-2-2:2007, 5.2 Test Bb or 5.3 Test Bd, at a temperature of T_{max} for a duration of 96 h. Test Bb is applied for non-heat-dissipating DUTs and Test Bd is applied for heat-dissipating DUTs. The operating mode is 3.4 or 4.4 as defined in ISO 16750-1.

5.1.2.2.3 Requirement

The functional status shall be class A as defined in ISO 16750-1.

5.2 Temperature step test

5.2.1 Purpose

This test checks the mechanical and electrical device for malfunctions (including failure to change properly between different operating modes) which may occur within a small section of the operating temperature range.

This test mainly applies to small and lightweight components, but can also be used for large and heavy components if agreed between the customer and the supplier. See a mass classification example in ISO 16750-1:2023, Annex C.

5.2.2 Test method

Install the DUT in a temperature chamber. According to Figure 1, decrease the temperature in steps of 5 °C from 20 °C to T_{min}, then increase the temperature in steps of 5 °C from T_{min} to T_{max} and then decrease the temperature in steps of 5 °C from T_{max} to 20 °C (see Figure 1). Wait at each step until the DUT has obtained thermal equilibrium. Perform functional tests with operating mode 3.2 in accordance with ISO 16750-1 at minimum supply voltage, U_{Smin}, and at maximum supply voltage, U_{Smax}, in accordance with the specified ISO 16750-2 code letter, at each temperature step. In addition, for each temperature step transitions of the DUT between different operating modes shall also be verified (e.g. change between operating modes 3.2 and 2.1). Switch the DUT off (operating mode 2.1) during transition to the next temperature. If the DUT has a nominal supply voltage other than 12/24 V, this test shall be performed by the voltage range corresponding to functional status class A as defined in ISO 16750-1 according to agreement between the customer and the supplier. In case of 48 V, the test shall be performed at the upper and lower voltage of nominal voltage range in accordance with ISO 21780. In case of voltage class B, the test shall be performed at the upper and lower voltage of unlimited operating capability in accordance with ISO 21498-1. For DUTs with multiple voltage supply

© ISO 2023 – All rights reserved

Documents
Document Sharing Hub
Full document details: BS ISO 16750-4:2023

levels, e.g. 12 V supply and voltage class B supply, the combination of test voltages for each temperature step shall be agreed between the customer and the supplier.

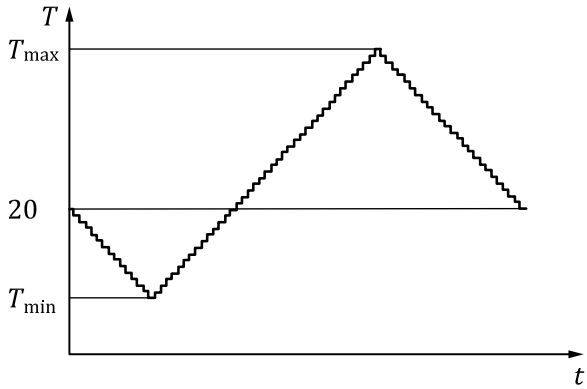

Key

T temperature, in °C

t time, in min

T_{min} minimum operating temperature (see Table 1)

T_{max} maximum operating temperature (see Table 1)

Figure 1 — Temperature step test

5.2.3 Requirement

For each temperature step between T_{min} and T_{max}, the DUT shall have functional status class A as defined in ISO 16750-1 for active operating modes.

5.3 Temperature cycling tests

5.3.1 Temperature cycle with specified change rate

5.3.1.1 Purpose

This test simulates varying temperatures with electrical operation of the systems/components, e.g. during the use of the system/component at changing ambient temperature. If a system/component is exposed to hot-soak temperatures (e.g. engine-mounted systems/components), an additional short temperature peak is added during the high temperature stage of the profile to ensure proper function during short temperature peaks. The electrical operation is switched off during stages of decreasing temperature to avoid electrical heat dissipation of the system/component which would inhibit reaching T_{min} inside the system/component. The failure mode is an electrical malfunction during temperature change.

The mass of the DUT is the main influence factor that determines the design of the temperature cycle. This test shall be selected from 5.3.1.2 or 5.3.1.3 in accordance with mass classification example in ISO 16750-1:2023, Annex C.

NOTE 1 This test is not intended to be a life test.

NOTE 2 For applying this test, it is important to calculate and check the temperature change rate against available test chamber capabilities. If the specified change rate is not technically feasible, the temperature profile can be changed by agreement between the customer and the supplier.

© ISO 2023 – All rights reserved
Documents
Document Sharing Hub
Full document details: BS ISO 16750-4:2023

5.3.1.2 Test method for small and lightweight DUT

For a small and lightweight DUT, perform the temperature cycling in accordance with IEC 60068-2-14, Test Nb, not using its specified temperature changing rates, but using the variant given in Figure 2 and Table 3. For the test including hot-soak temperature (T_{maxHS}), also use the variant given in Figure 3 and Table 4. The test shall be performed with 30 cycles.

Perform temperature cycling with the following as one cycle. Decrease ambient temperature from room temperature (RT) to T_{min}, expose the DUT at T_{min}, increase ambient temperature from T_{min} to T_{max}, expose the DUT at T_{max} with/without including T_{maxHS} and then decrease ambient temperature from T_{max} to RT (see Figure 2 and Figure 3).

Perform a functional test at the end of T_{min} as short as possible with operating mode 3.3 or 4.3 as defined in ISO 16750-1 (see key a in Figure 2 or Figure 3). In addition, operate with operating mode 3.3 or 4.3 as defined in ISO 16750-1 (see key b in Figure 2 or Figure 3) during the section from T_{min} to RT. Change operating mode to 3.4 or 4.4 (see key c in Figure 2 or Figure 3) during the section from RT to the end of T_{max}. Perform a functional test at the end of T_{max} as short as possible with operating mode 3.4 or 4.4 as defined in ISO 16750-1 (see key e in Figure 2 or Figure 3). During the other sections, operate with operating mode 2.1 (see key d" in Figure 2 or Figure 3). For tests including T_{maxHS}, the DUT shall not be operated at the time which is over T_{max} (see key t_6, t_7, t_8 in Figure 3). If operating mode 4.3/4.4 is not technically feasible, operating mode 3.3/3.4 may be used if agreed between the customer and the supplier.

© ISO 2023 – All rights reserved

Documents
Document Sharing Hub
Full document details: BS ISO 16750-4:2023

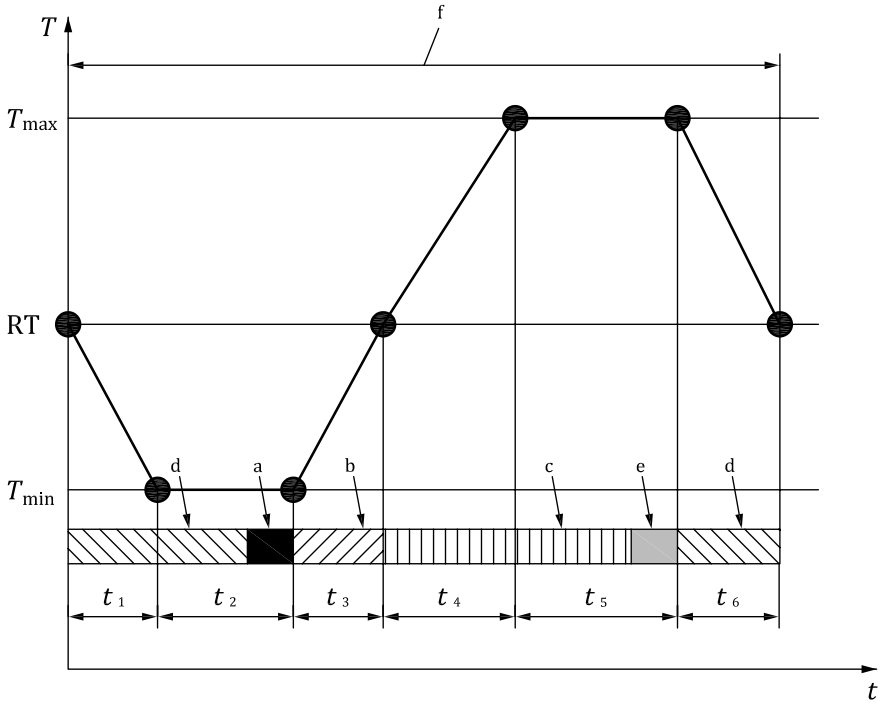

Key

T	temperature, in °C
t	time, in min
T_{min}	minimum operating temperature (see Table 1)
T_{max}	maximum operating temperature (see Table 1)
RT	room temperature (see ISO 16750-1)
t_1, t_2, t_3, t_4, t_5, t_6	time parameter as defined in Table 3
a	Functional test with operating mode 3.3 or 4.3 as defined in ISO 16750-1.
b	Operating mode 3.3 or 4.3 as defined in ISO 16750-1.
c	Operating mode 3.4 or 4.4 as defined in ISO 16750-1.
d	Operating mode 2.1 as defined in ISO 16750-1.
e	Functional test with operating mode 3.4 or 4.4 as defined in ISO 16750-1.
f	One cycle.

Figure 2 — Temperature cycle with specified change rate for small and lightweight DUT

Table 3 — Temperatures and time duration for temperature cycling for small and lightweight DUT

Parameter	Duration [min]	Temperature [°C]
t_1	60	From RT to T_{min}
t_2	90	Exposure time at T_{min}
t_3	60	From T_{min} to RT
t_4	90	From RT to T_{max}
t_5	110	Exposure time at T_{max}
t_6	70	From T_{max} to RT

© ISO 2023 – All rights reserved
Documents
Document Sharing Hub
Full document details: BS ISO 16750-4:2023

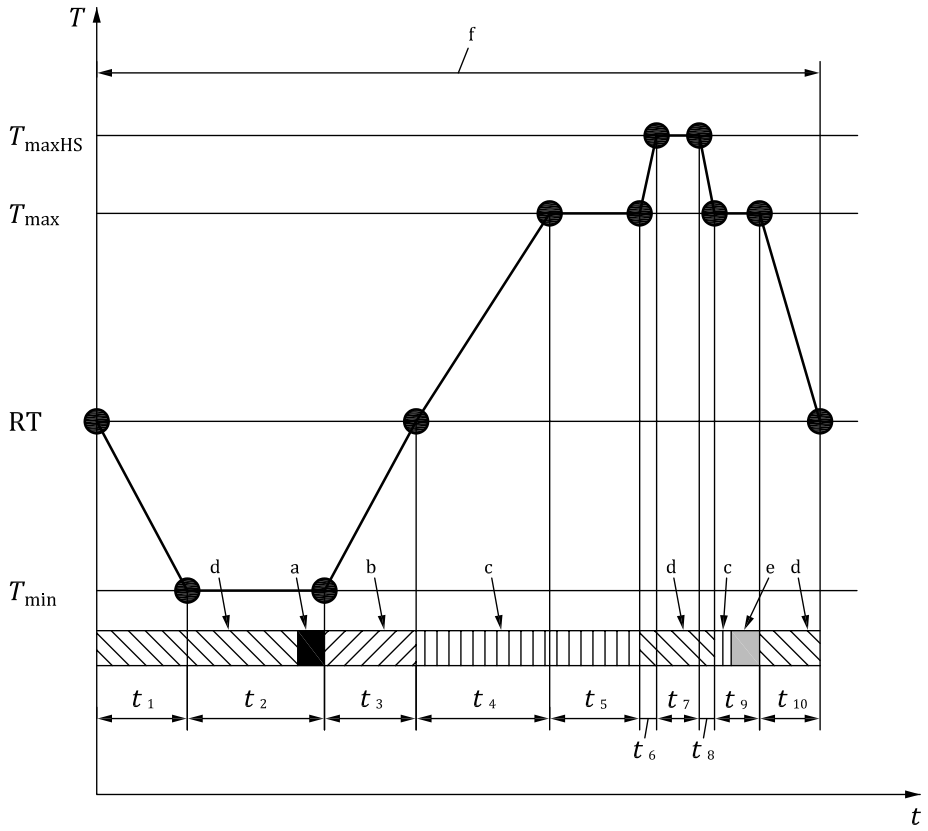

Key

T	temperature, in °C
t	time, in min
T_{min}	minimum operating temperature (see Table 1)
T_{max}	maximum operating temperature (see Table 1)
T_{maxHS}	hot soak temperature (see Table 2)
RT	room temperature (see ISO 16750-1)
t_1, t_2, t_3, t_4, t_5, t_6, t_7, t_8, t_9, t_{10}	time parameter as defined in Table 4
a	Functional test with operating mode 3.3 or 4.3 as defined in ISO 16750-1.
b	Operating mode 3.3 or 4.3 as defined in ISO 16750-1.
c	Operating mode 3.4 or 4.4 as defined in ISO 16750-1.
d	Operating mode 2.1 as defined in ISO 16750-1.
e	Functional test with operating mode 3.4 or 4.4 as defined in ISO 16750-1.
f	One cycle.

Figure 3 — Temperature cycle with specified change rate and hot-soak stage for small and lightweight DUT

Table 4 — Temperatures and time duration for temperature cycling with hot-soak stage for small and lightweight DUT

Parameter	Duration [min]	Temperature [°C]
t_1	60	From RT to T_{min}
t_2	90	Exposure time at T_{min}
t_3	60	From T_{min} to RT

© ISO 2023 – All rights reserved

Documents
Document Sharing Hub
Full document details: BS ISO 16750-4:2023

Table 4 *(continued)*

Parameter	Duration [min]	Temperature [°C]
t_4	90	From RT to T_{max}
t_5	60	Exposure time at T_{max}
t_6	10	From T_{max} to T_{maxHS}
t_7	30	Exposure time at T_{maxHS}
t_8	10	From T_{maxHS} to T_{max}
t_9	30	Exposure time at T_{max}
t_{10}	70	From T_{max} to RT

5.3.1.3 Test method for large and heavy DUT

For large and heavy DUT, perform the temperature cycling in accordance with IEC 60068-2-14, Test Nb, not using its specified temperature changing rates, but using the variant given in Figure 4 and Table 5. For the test including hot-soak temperature (T_{maxHS}), also use the variant given in Figure 5 and Table 6. The test shall be performed with 30 cycles.

Perform temperature cycling with the following as one cycle. Decrease ambient temperature from RT to T_{min}, expose the DUT at T_{min}, increase ambient temperature from T_{min} to T_{max}, expose the DUT at T_{max} with/without including T_{maxHS} and then decrease ambient temperature from T_{max} to RT (see Figure 4 and Figure 5).

Before performing this test, a separate temperature measurement (with DUT in operating mode 2.1 as defined in ISO 16750-1) shall be performed to determine what exposure time at T_{max}, T_{min} or T_{maxHS} (see Figure 4 or Figure 5) is necessary to obtain thermal equilibrium of the DUT. If operating mode 2.1 is not technically feasible for the separate temperature measurement, operating mode 1.2 as defined in ISO 16750-1 can be used as agreed between the customer and the supplier. The measuring point of DUT shall be agreed between the customer and the supplier, considering a target device (e.g. microprocessor, motor coil) which is temperature-influenced in functionality or performance. The dwell time t_x of DUT at T_{min}, T_{max} and T_{maxHS} shall be more than 30 min each per temperature cycle; therefore, exposure time shall be adjusted accordingly depending on the size and other characteristics of the DUT. The customer and the supplier shall agree on a complete profile of temperature cycle, including dwell time and stabilisation time, depending on the size and other properties of the DUT.

Perform a functional test at the end of T_{min} as short as possible with operating mode 3.3 or 4.3 as defined in ISO 16750-1 (see key a in Figure 4 or Figure 5). In addition, operate with operating mode 3.3 or 4.3 as defined in ISO 16750-1 (see key b in Figure 4 or Figure 5) during the section from T_{min} to RT. Change operating mode to 3.4 or 4.4 (see key c in Figure 4 or Figure 5) during the section from RT to the end of T_{max}. Perform a functional test at the end of T_{max} as short as possible with operating mode 3.4 or 4.4 as defined in ISO 16750-1 (see key e in Figure 4 or Figure 5). During the other sections, operate with operating mode 2.1 (see key d in Figure 4 or Figure 5). For tests including T_{maxHS}, the DUT shall not be operated at the time which is over T_{max} (see key t_6, t_7, t_8 in Figure 5). If operating mode 4.3/4.4 is not technically feasible, operating mode 3.3/3.4 may be used if agreed between the customer and the supplier.

© ISO 2023 – All rights reserved
Documents
Document Sharing Hub
Full document details: BS ISO 16750-4:2023

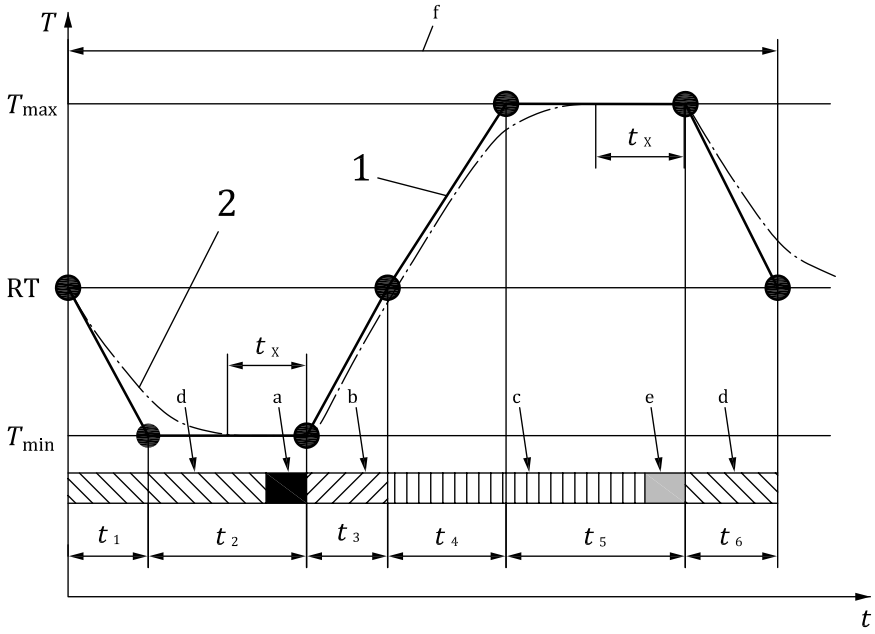

Key

T	temperature, in °C
t	time, in min
1	ambient temperature
2	DUT temperature, exemplary for non-heat-dissipating DUTs
T_{min}	minimum operating temperature (see Table 1)
T_{max}	maximum operating temperature (see Table 1)
RT	room temperature (see ISO 16750-1)
t_1, t_2, t_3, t_4, t_5, t_6	time parameter as defined in Table 5
t_x	dwell time at T_{min} and T_{max}
a	Functional test with operating mode 3.3 or 4.3 as defined in ISO 16750-1.
b	Operating mode 3.3 or 4.3 as defined in ISO 16750-1.
c	Operating mode 3.4 or 4.4 as defined in ISO 16750-1.
d	Operating mode 2.1 as defined in ISO 16750-1.
e	Functional test with operating mode 3.4 or 4.4 as defined in ISO 16750-1.
f	One cycle.

Figure 4 — Temperature cycle with specified change rate for large and heavy DUT

Table 5 — Temperatures and time duration for temperature cycling for large and heavy DUT

Parameter	Duration [min]	Temperature [°C]
t_1	60	From RT to T_{min}
t_2	As agreed	Exposure time at T_{min}
t_3	60	From T_{min} to RT
t_4	90	From RT to T_{max}
t_5	As agreed	Exposure time at T_{max}
t_6	70	From T_{max} to RT
t_x	> 30	Dwell time at T_{min} and T_{max}

© ISO 2023 – All rights reserved

Documents
Document Sharing Hub
Full document details: BS ISO 16750-4:2023

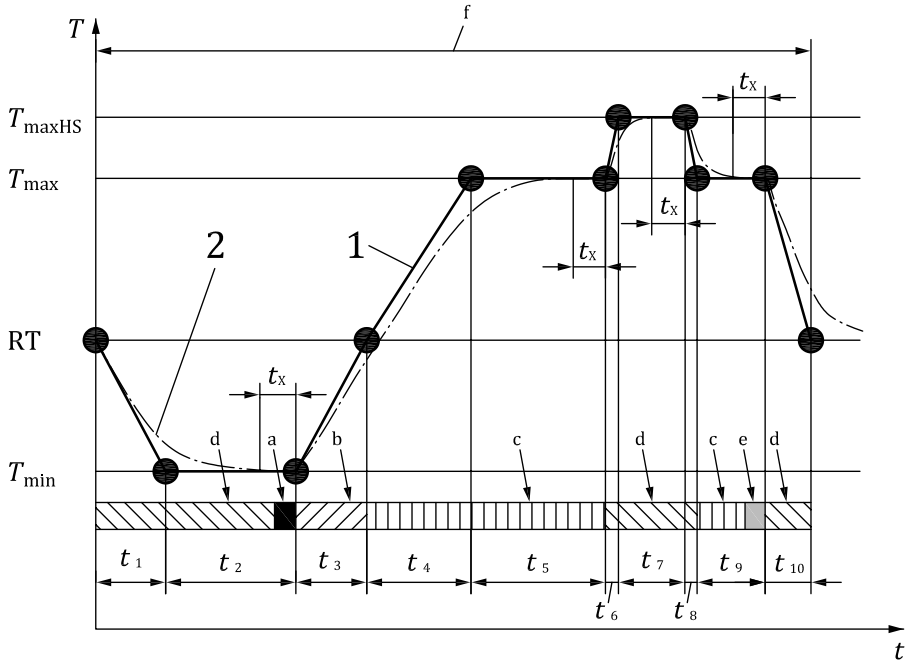

Key

T	temperature, in °C
t	time, in min
1	ambient temperature
2	DUT temperature, exemplary for non-heat-dissipating DUTs
T_{min}	minimum operating temperature (see Table 1)
T_{max}	maximum operating temperature (see Table 1)
T_{maxHS}	hot soak temperature (see Table 2)
RT	room temperature (see ISO 16750-1)
t_1, t_2, t_3, t_4, t_5, t_6, t_7, t_8, t_9, t_{10}	time parameter as defined in Table 6
t_x	dwell time at T_{min}, T_{max} and T_{maxHS}
a	Functional test with operating mode 3.3 or 4.3 as defined in ISO 16750-1.
b	Operating mode 3.3 or 4.3 as defined in ISO 16750-1.
c	Operating mode 3.4 or 4.4 as defined in ISO 16750-1.
d	Operating mode 2.1 as defined in ISO 16750-1.
e	Functional test with operating mode 3.4 or 4.4 as defined in ISO 16750-1.
f	One cycle.

Figure 5 — Temperature cycle with specified change rate and hot-soak stage for large and heavy DUT

Table 6 — Temperatures and time duration for temperature cycling with hot-soak stage for large and heavy DUT

Parameter	Duration [min]	Temperature [°C]
t_1	60	From RT to T_{min}
t_2	As agreed	Exposure time at T_{min}
t_3	60	From T_{min} to RT
t_4	90	From RT to T_{max}

© ISO 2023 – All rights reserved
Documents
Document Sharing Hub
Full document details: BS ISO 16750-4:2023

Table 6 *(continued)*

Parameter	Duration [min]	Temperature [°C]
t_5	As agreed	Exposure time at T_{max}
t_6	10	From T_{max} to T_{maxHS}
t_7	As agreed	Exposure time at T_{maxHS}
t_8	10	From T_{maxHS} to T_{max}
t_9	As agreed	Exposure time at T_{max}
t_{10}	70	From T_{max} to RT
t_x	> 30	Dwell time at T_{min}, T_{max} and T_{maxHS}

5.3.1.4 Requirement

The functional status shall be class A as defined in ISO 16750-1 during active operating modes.

5.3.2 Rapid change of temperature with specified transition duration

5.3.2.1 Purpose

This is an accelerated test which simulates a very high number of slow temperature cycles in the vehicle. The acceleration is possible due to a much higher temperature change rate and a bigger temperature change in one cycle in comparison with real vehicle stress. The failure mode is an electrical malfunction and/or mechanical failure due to cracking of materials or seal failures caused by ageing and different temperature expansion coefficients.

NOTE If the failure mechanism is known, it is possible to perform the test only with a subcomponent by agreement between the customer and the supplier. Mechanical constraints and interfaces such as for instance casing or fixation points are examples of things that can contribute to the failure mechanisms during this test, and can be taken into consideration if running the test on subcomponent level.

5.3.2.2 Test method

Perform the temperature cycling in accordance with IEC 60068-2-14, Test Na, not using its conditions, but using the variant such as the combination of the two temperatures, the transfer time, the exposure time and the number of cycles. The DUT shall be exposed to T_{min} and to T_{max} alternately. Transfer time is within 30 s or less. Use operating mode 1.2 as defined in ISO 16750-1. The number of cycles refers to Table 10 which relates the mounting location shown in Table A.1.

The transfer time between T_{min} and T_{max} can be extended to 3 min by agreement between the customer and the supplier due to the size of the DUT or test setup feasibility. If the transfer time exceeds 3 min, this test can be skipped by agreement between the customer and the supplier. In case of doubt, a separate measurement can be performed to determine how long the transfer time shall be.

NOTE 1 As a background of possible extension to 3 min of the transfer time, in case of large DUT (e.g. commercial vehicle e-motor), it is possible that the transfer time is longer than 30 s for applying this test.

NOTE 2 It can be difficult for large and heavy components (e.g. e-motor over 100 kg), to fulfil Test Na with a transfer time of 3 min. In such cases an alternative testing approach can be agreed between the customer and the supplier (e.g. IEC 60068-2-14, Test Nb).

Keep the DUT at T_{min} or T_{max} for a given dwell time t_x after thermal equilibrium of the DUT is obtained. The customer and the supplier shall agree on a complete profile of temperature cycle, including dwell time and stabilisation time, depending on the size and other properties of the DUT. In case of doubt, a separate measurement (with DUT in operating mode 2.1 as defined in ISO 16750-1) can be performed to determine how long the exposure time shall be at T_{max} or T_{min}. If operating mode 2.1 is not technically feasible for the separate temperature measurement, operating mode 1.2 as defined in ISO 16750-1

© ISO 2023 – All rights reserved

AVA Documents Document Sharing Hub
Full document details: BS ISO 16750-4:2023