BS ISO 16858:2013

BSI Standards Publication

Ships and marine technology — Loose gear of lifting appliances on ships — Pulleys

bsi.

...making excellence a habit.™

Document Sharing Hub

National foreword

This British Standard is the UK implementation of ISO 16858:2013.

The UK participation in its preparation was entrusted to Technical Committee SME/32/-/4, Ships and marine technology - Outfitting and deck machinery.

A list of organizations represented on this committee can be obtained on request to its secretary.

This publication does not purport to include all the necessary provisions of a contract. Users are responsible for its correct application.

© The British Standards Institution 2014. Published by BSI Standards Limited 2014

ISBN 978 0 580 75011 3

ICS 47.020.40; 47.020.50

Compliance with a British Standard cannot confer immunity from legal obligations.

This British Standard was published under the authority of the Standards Policy and Strategy Committee on 28 February 2014.

Amendments issued since publication

Date	Text affected

Documents
Document Sharing Hub

Full document details: BS ISO 16858:2013

INTERNATIONAL STANDARD

ISO 16858

First edition
2013-12-15

Ships and marine technology — Loose gear of lifting appliances on ships — Pulleys

Navires et technologie maritime — Accessoires mobiles des appareils de levage sur les navires — Poulies

Reference number
ISO 16858:2013(E)

Documents
Document Sharing Hub

© ISO 2013

Full document details: BS ISO 16858:2013

COPYRIGHT PROTECTED DOCUMENT

© ISO 2013

All rights reserved. Unless otherwise specified, no part of this publication may be reproduced or utilized otherwise in any form or by any means, electronic or mechanical, including photocopying, or posting on the internet or an intranet, without prior written permission. Permission can be requested from either ISO at the address below or ISO's member body in the country of the requester.

ISO copyright office
Case postale 56 • CH-1211 Geneva 20
Tel. + 41 22 749 01 11
Fax + 41 22 749 09 47
E-mail copyright@iso.org
Web www.iso.org

Published in Switzerland

© ISO 2013 – All rights reserved

Documents
Document Sharing Hub

Full document details: BS ISO 16858:2013

Contents

Page

Foreword ..... **iv**
1 Scope **1**
2 Normative references **1**
3 Sheave components **1**
4 Designation of sheaves **3**
5 Technical requirements **3**
5.1 Materials 3
5.2 Ranges 3
5.3 Process 3
5.4 Assembly requirements 4
5.5 Accuracy requirements 4
5.6 Special explanations 7
6 Test requirements **7**
7 Inspection rules **7**
8 Package, transportation, and storage **8**
8.1 Package 8
8.2 Transportation 8
8.3 Storage 8
9 Use, maintenance, and scrapping standards of sheaves **8**
Annex A (informative) **Common hot-rolled sheave ranges** **9**
Bibliography **14**

© ISO 2013 – All rights reserved

Documents
Document Sharing Hub
Full document details: BS ISO 16858:2013

Foreword

ISO (the International Organization for Standardization) is a worldwide federation of national standards bodies (ISO member bodies). The work of preparing International Standards is normally carried out through ISO technical committees. Each member body interested in a subject for which a technical committee has been established has the right to be represented on that committee. International organizations, governmental and non-governmental, in liaison with ISO, also take part in the work. ISO collaborates closely with the International Electrotechnical Commission (IEC) on all matters of electrotechnical standardization.

The procedures used to develop this document and those intended for its further maintenance are described in the ISO/IEC Directives, Part 1. In particular the different approval criteria needed for the different types of ISO documents should be noted. This document was drafted in accordance with the editorial rules of the ISO/IEC Directives, Part 2 (see www.iso.org/directives).

Attention is drawn to the possibility that some of the elements of this document may be the subject of patent rights. ISO shall not be held responsible for identifying any or all such patent rights. Details of any patent rights identified during the development of the document will be in the Introduction and/or on the ISO list of patent declarations received (see www.iso.org/patents).

Any trade name used in this document is information given for the convenience of users and does not constitute an endorsement.

For an explanation on the meaning of ISO specific terms and expressions related to conformity assessment, as well as information about ISO's adherence to the WTO principles in the Technical Barriers to Trade (TBT) see the following URL: Foreword - Supplementary information

The committee responsible for this document is ISO/TC 8, *Ships and marine technology*, Subcommittee SC 4, *Outfitting and deck machinery*.

© ISO 2013 – All rights reserved
Documents
Document Sharing Hub
Full document details: BS ISO 16858:2013

INTERNATIONAL STANDARD ISO 16858:2013(E)

Ships and marine technology — Loose gear of lifting appliances on ships — Pulleys

1 Scope

This International Standard specifies the structural types, basic parameters, technical requirements, test methods, inspection rules, marking, storage, and transportation of sheaves, loose gear of lifting appliances on ships.

This International Standard is applicable to hot-rolled sheaves of lifting appliances on ships.

2 Normative references

The following documents, in whole or in part, are normatively referenced in this document and are indispensable for its application. For dated references, only the edition cited applies. For undated references, the latest edition of the referenced document (including any amendments) applies.

ISO 16855, *Ships and Marine Technology — Loose gear of lifting appliances on ships — General requirements*

3 Sheave components

For the components and basic dimensions of hot-rolled sheaves, see Figure 1.

© ISO 2013 – All rights reserved

Documents
Document Sharing Hub
Full document details: BS ISO 16858:2013

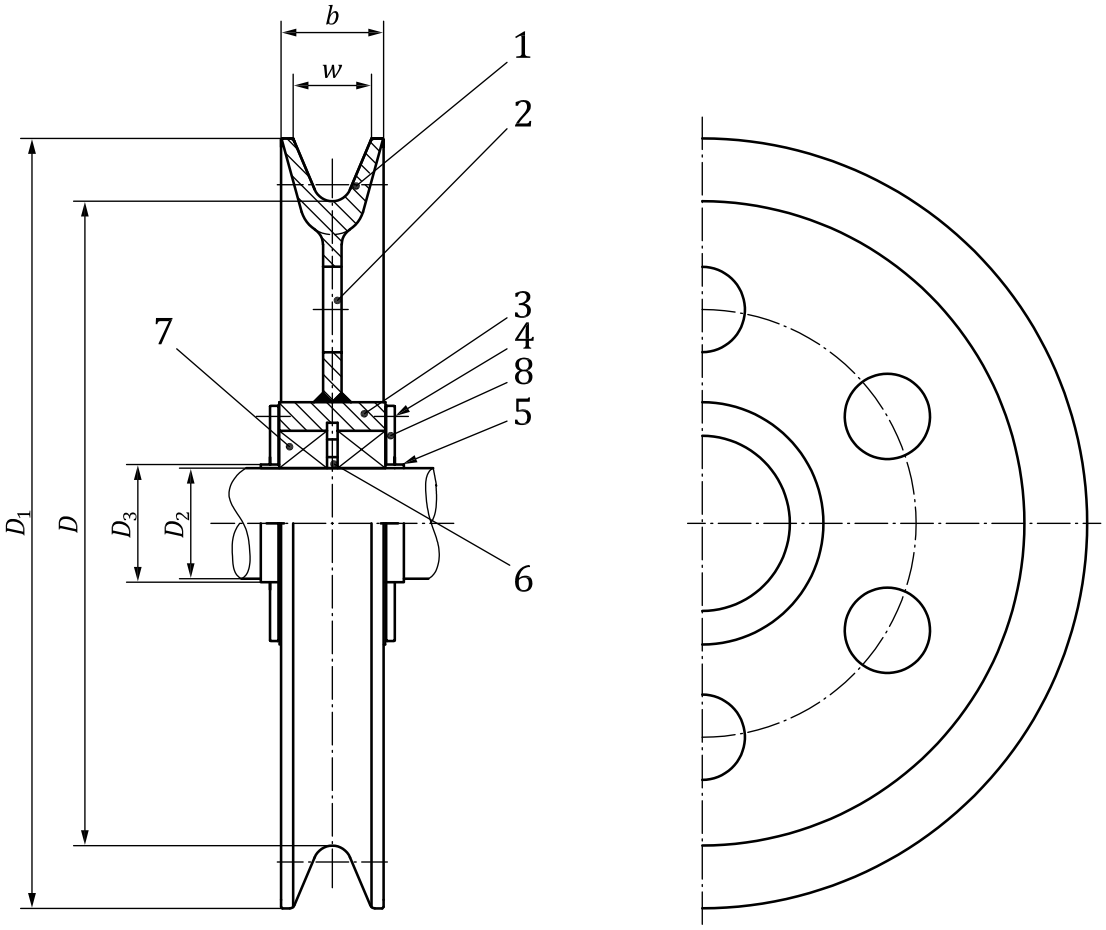

Key

1 rim
2 plate
3 hub
4 bolt
5 spacer
6 spacer sleeve
7 bearing
8 dust washer (optional)

Figure 1 — Sheave components

© ISO 2013 – All rights reserved
Documents
Document Sharing Hub
Full document details: BS ISO 16858:2013