BS ISO 16881-1:2024

BSI Standards Publication

Cranes — Design calculation for wheel/rail contacts and associated trolley track supporting structure

Part 1: General

Documents
Document Sharing Hub

Full document details: BS ISO 16881-1:2024

National foreword

This British Standard is the UK implementation of ISO 16881-1:2024. It supersedes BS ISO 16881-1:2005, which is withdrawn.

The UK participation in its preparation was entrusted to Technical Committee MHE/3/1, Crane design.

A list of organizations represented on this committee can be obtained on request to its committee manager.

Contractual and legal considerations

This publication has been prepared in good faith, however no representation, warranty, assurance or undertaking (express or implied) is or will be made, and no responsibility or liability is or will be accepted by BSI in relation to the adequacy, accuracy, completeness or reasonableness of this publication. All and any such responsibility and liability is expressly disclaimed to the full extent permitted by the law.

This publication is provided as is, and is to be used at the recipient's own risk.

The recipient is advised to consider seeking professional guidance with respect to its use of this publication.

This publication is not intended to constitute a contract. Users are responsible for its correct application.

© The British Standards Institution 2024
Published by BSI Standards Limited 2024

ISBN 978 0 539 23280 6

ICS 53.020.20

Compliance with a British Standard cannot confer immunity from legal obligations.

This British Standard was published under the authority of the Standards Policy and Strategy Committee on 31 July 2024.

Amendments/corrigenda issued since publication

Date	Text affected

Documents
Document Sharing Hub

Full document details: BS ISO 16881-1:2024

International Standard

ISO 16881-1

Second edition
2024-07

Cranes — Design calculation for wheel/rail contacts and associated trolley track supporting structure —

Part 1:
General

Appareils de levage à charge suspendue — Calcul de conception des contacts galets/rails et de la structure porteuse du chariot de roulement —

Partie 1: Généralités

Reference number
ISO 16881-1:2024(en)

© ISO 2024

Documents
Document Sharing Hub

Full document details: BS ISO 16881-1:2024

COPYRIGHT PROTECTED DOCUMENT

© ISO 2024

All rights reserved. Unless otherwise specified, or required in the context of its implementation, no part of this publication may be reproduced or utilized otherwise in any form or by any means, electronic or mechanical, including photocopying, or posting on the internet or an intranet, without prior written permission. Permission can be requested from either ISO at the address below or ISO's member body in the country of the requester.

ISO copyright office
CP 401 • Ch. de Blandonnet 8
CH-1214 Vernier, Geneva
Phone: +41 22 749 01 11
Email: copyright@iso.org
Website: www.iso.org

Published in Switzerland

Documents
Document Sharing Hub
Full document details: BS ISO 16881-1:2024

Contents

Page

Foreword ... **iv**
Introduction ... **v**
1 Scope ... **1**
2 Normative references ... **1**
3 Terms and definitions ... **1**
3.1 General ... 1
3.2 Symbols and abbreviations ... 2
4 General ... **3**
4.1 General principles ... 3
4.1.1 Unit-consistent hardness ... 3
4.2 Line and point contact cases ... 3
4.3 Hardness profile below contact surface ... 4
4.4 Equivalent modulus of elasticity ... 5
5 Proof of static strength ... **6**
5.1 General ... 6
5.2 Design contact force ... 6
5.3 Static limit design contact force ... 6
5.3.1 General ... 6
5.3.2 Calculation of the limit design force ... 7
5.3.3 Edge pressure ... 7
5.3.4 Non-uniform pressure distribution ... 8
6 Proof of fatigue strength ... **8**
6.1 General ... 8
6.2 Design contact force ... 9
6.3 Limit design contact force ... 9
6.3.1 Basic equation ... 9
6.3.2 Reference contact force ... 9
6.3.3 Contact force history parameter ... 10
6.3.4 Contact force spectrum factor ... 10
6.3.5 Counting of rolling contacts ... 11
6.3.6 Relative total number of rolling contacts ... 11
6.3.7 Classification of contact force history parameter ... 12
6.4 Factors of further influences ... 12
6.4.1 Basic equation ... 12
6.4.2 Edge pressure for fatigue ... 12
6.4.3 Non-uniform pressure distribution for fatigue ... 12
6.4.4 Skewing ... 12
6.4.5 Mechanical drive factor ... 13
7 Determination of local stresses due to wheel loads ... 13
Annex A (informative) **Distribution of wheel load under rail** ... **14**
Annex B (informative) **Local stresses in wheel supporting flanges** ... **16**
Annex C (informative) **Strength properties for a selection of wheel and rail materials** ... **21**
Annex D (informative) **Conversion tables of hardness** ... **25**
Annex E (informative) **Design of rail wheel flanges** ... **27**
Bibliography ... **29**

© ISO 2024 – All rights reserved

Documents
Document Sharing Hub
Full document details: BS ISO 16881-1:2024

Foreword

ISO (the International Organization for Standardization) is a worldwide federation of national standards bodies (ISO member bodies). The work of preparing International Standards is normally carried out through ISO technical committees. Each member body interested in a subject for which a technical committee has been established has the right to be represented on that committee. International organizations, governmental and non-governmental, in liaison with ISO, also take part in the work. ISO collaborates closely with the International Electrotechnical Commission (IEC) on all matters of electrotechnical standardization.

The procedures used to develop this document and those intended for its further maintenance are described in the ISO/IEC Directives, Part 1. In particular, the different approval criteria needed for the different types of ISO documents should be noted. This document was drafted in accordance with the editorial rules of the ISO/IEC Directives, Part 2 (see www.iso.org/directives).

ISO draws attention to the possibility that the implementation of this document may involve the use of (a) patent(s). ISO takes no position concerning the evidence, validity or applicability of any claimed patent rights in respect thereof. As of the date of publication of this document, ISO had not received notice of (a) patent(s) which may be required to implement this document. However, implementers are cautioned that this may not represent the latest information, which may be obtained from the patent database available at www.iso.org/patents. ISO shall not be held responsible for identifying any or all such patent rights.

Any trade name used in this document is information given for the convenience of users and does not constitute an endorsement.

For an explanation of the voluntary nature of standards, the meaning of ISO specific terms and expressions related to conformity assessment, as well as information about ISO's adherence to the World Trade Organization (WTO) principles in the Technical Barriers to Trade (TBT), see www.iso.org/iso/foreword.html.

This document was prepared by Technical Committee ISO/TC 96, *Cranes*, Subcommittee SC 10, *Design principles and requirements*.

This second edition cancels and replaces the first edition (ISO 16881-1:2005), which has been technically revised.

The main changes are as follows:

— improvements were made to Annex B (local stresses);

— tables were added to Annex C to cover American, Chinese, and Japanese steels.

A list of all parts in the ISO 16881 series can be found on the ISO website.

Any feedback or questions on this document should be directed to the user's national standards body. A complete listing of these bodies can be found at www.iso.org/members.html.

© ISO 2024 – All rights reserved

Documents
Document Sharing Hub
Full document details: BS ISO 16881-1:2024

Introduction

This document establishes requirements and gives guidance and design rules that reflect the state of the art in crane machine design. The rules represent good design practice that ensures that essential safety requirements are met and that the components have an adequate service life. Deviation from these rules can increase risk or reduce service life. However, new technical innovations and materials provide solutions that result in equal or improved safety and durability.

© ISO 2024 – All rights reserved

Documents
Document Sharing Hub
Full document details: BS ISO 16881-1:2024

Documents
Document Sharing Hub

Cranes — Design calculation for wheel/rail contacts and associated trolley track supporting structure —

Part 1: General

1 Scope

This document specifies requirements for selecting the size of iron or steel wheels. It also presents formulae to determine local stresses in crane structures due to the effects of wheel loads.

This document covers requirements for steel and cast-iron wheels. It applies to metallic contacts only.

This document does not apply to roller bearings.

This document is used together with the classification of the ISO 4301 series and the loads and load combinations of the ISO 8686 series.

This document is based on the limit state method (see ISO 8686-1).

This document is for design purposes only. It is not a guarantee of actual performance.

2 Normative references

The following documents are referred to in the text in such a way that some or all of their content constitutes requirements of this document. For dated references, only the edition cited applies. For undated references, the latest edition of the referenced document (including any amendments) applies.

ISO 4301 (all parts), *Cranes — Classification*

ISO 4302, *Cranes — Wind load assessment*

ISO 4306-1, *Cranes — Vocabulary — Part 1: General*

ISO 6506-1, *Metallic materials — Brinell hardness test — Part 1: Test method*

ISO 8686 (all parts), *Cranes — Design principles for loads and load combinations*

ISO 11031, *Cranes — Principles for seismically resistant design*

ISO 12100, *Safety of machinery — General principles for design — Risk assessment and risk reduction*

ISO 12488-1, *Cranes — Tolerances for wheels and travel and traversing tracks — Part 1: General*

ISO 20332, *Cranes — Proof of competence of steel structures*

3 Terms and definitions

3.1 General

For the purposes of this document, the terms and definitions given in ISO 4306-1, ISO 12100 and the following apply.

© ISO 2024 – All rights reserved

Documents
Document Sharing Hub
Full document details: BS ISO 16881-1:2024

ISO and IEC maintain terminology databases for use in standardization at the following addresses:

— ISO Online browsing platform: available at https://www.iso.org/obp

— IEC Electropedia: available at https://www.electropedia.org/

3.2 Symbols and abbreviations

For the purposes of this document, the symbols and abbreviations given in Table 1 apply.

Table 1 — Symbols and abbreviations

Symbols, abbreviations	Description
b	load-bearing width
b_r, b_w	effective contact widths of rail and wheel
D_w	wheel diameter
E_m	equivalent modulus of elasticity
E_r	modulus of elasticity of the rail or track
E_w	modulus of elasticity of the wheel
F	wheel load
$F_{Rd,f}$	limit design contact force for fatigue
$F_{Rd,s}$	limit design contact force
$F_{Sd,f}$	design contact force for fatigue
$F_{Sd,f,i}$	design contact force in contact i
$F_{Sd,s}$	design contact force
F_u	reference contact force
f_f	factor of further influences in fatigue
f_{f1}	decreasing factor for edge pressure in fatigue
f_{f2}	decreasing factor for non-uniform pressure distribution in fatigue
f_{f3}	decreasing factor for skewing in fatigue
f_{f4}	materials factor in fatigue
f_{f5}	decreasing factor for driven wheels in fatigue
f_y	yield point
f_1	decreasing factor for edge pressure
f_2	decreasing factor for non-uniform pressure distribution
HBW	Brinell hardness
HB*	unit-consistent hardness
i	index of one rolling contact with $f_{sd,f,i}$
i_D	number of rolling contacts at reference point
i_{tot}	total number of rolling contacts during the useful life of a wheel, rail or track
m	exponent for wheel/rail contacts
k_c	contact force spectrum factor
r_k	radius of the rail surface or the second wheel radius
r_3	radius of the edge
s_c	contact force history parameter
S_C	classes of contact force history parameter s_c
w	width of projecting non-contact area
z_{mp}, z_{ml}	depth of point of maximum shear for point or line contact
α	skewing angle

© ISO 2024 – All rights reserved

Documents
Document Sharing Hub
Full document details: BS ISO 16881-1:2024

Table 1 *(continued)*

Symbols, abbreviations	Description
α_g	part of the skewing angle α due to the slack of the guide
α_t	part of the skewing angle α due to tolerances
α_w	part of the skewing angle α due to wear
γ_{cf}	contact resistance factor for fatigue
γ_m	general resistance coefficient; γ_m=1,1
γ_n	risk coefficient
γ_p	partial safety factors
ν	radial strain coefficient (ν = 0,3 for steel)
ν_c	relative total number of rolling contacts
ϕ	dynamic factors (see ISO 8686 series)

4 General

4.1 General principles

The proof of competence for static strength and fatigue strength shall be fulfilled when selecting a wheel and rail combination. In the proof of competence for static strength, the material properties of the weaker party (wheel or rail) shall be applied. The proof of competence for fatigue strength, or rolling contact fatigue (RCF), shall be conducted separately to each party, applying its specific material property and number of rolling contacts.

The proof shall be applied to all arrangements in cranes, where a wheel/rail type of rolling contact occurs, e.g. crane travel wheels, trolley traverse wheels, guide rollers and wheels/rollers supporting slewing structures. The term wheel is used throughout this document for the rolling party in a contact.

The proof of competence criteria in Clauses 5 and 6 are based upon Hertz pressure on the contact surface and the shear stress below the surface due to wheel/rail contact.

NOTE Guidance on the nominal dimensions of wheels is given in Annex E.

4.1.1 Unit-consistent hardness

Some of the formulae in this document refer to unit-consistent hardness (HB^*), which is based on the Brinell hardness (HBW) and given as a value without units in line with ISO 6506-1. The unit of HB* shall match the unit of the modulus of elasticity used in the calculation. Using SI units, the unit-consistent hardness is given by:

$$HB^* = HBW \cdot \frac{N}{mm^2}$$

where

HB* is the unit-consistent hardness;

HBW is the value of the Brinell hardness.

EXAMPLE If HBW = 300, then HB* = 300 N/mm^2.

NOTE Annex D provides a table of hardness conversion.

4.2 Line and point contact cases

There are two main theoretical contact cases: a line contact and a point contact (see Figure 1).

© ISO 2024 – All rights reserved

Documents
Document Sharing Hub
Full document details: BS ISO 16881-1:2024

Where the crown radius, r_k, in typical designs of crane wheels and rails is large in relation to the width of the wheel and rail, slight wear due to contact will occur for cranes. This document uses the line contact model to calculate Hertz pressure.

The conditions of point contact cases conforming to this assumption are stated in Figure 1 b).

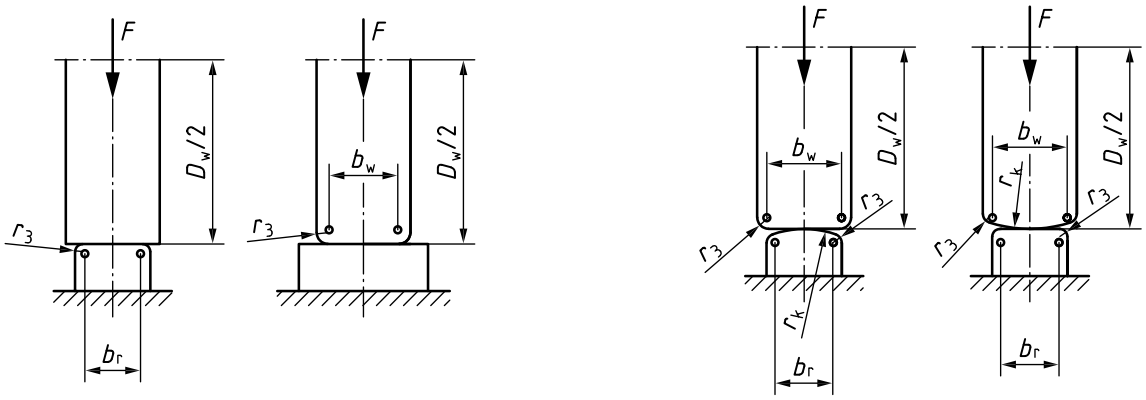

a) Line contact **b) Point contact**

NOTE 1 The point contact in Figure 1 b) is assumed where the following condition applies:

$$5 \cdot min[b_r ; b_w] \leq r_k \leq 200 \cdot min[b_r ; b_w]$$

Where $r_k > 200 \cdot min[b_r ; b_w]$, the requirements for line contact shall be applied.

NOTE 2 The effective contact widths (b_w, b_r) are determined by deducting the effect of the corner radius equal to 2 × r_3 from the material width of the wheel/rail.

Figure 1 — Contact cases

4.3 Hardness profile below contact surface

The hardness shall extend deeper into the material than the depth of maximum shear, preferably twice this depth. The hardness value may be obtained using the ultimate strength of the material and the appropriate conversion tables for commonly used materials (see Annex C and Annex D).

Special care shall be taken with surface hardening and the depth zone to ensure that the hardness profile does not drop below the shear profile (see Figure 2).

The thickness of the surface-hardened layers should be determined according to ISO 18203.

© ISO 2024 – All rights reserved

Documents
Document Sharing Hub
Full document details: BS ISO 16881-1:2024