BS ISO 16904-2:2024

BSI Standards Publication

Installation and equipment for liquefied natural gas — Design and testing of marine transfer systems

Part 2: Design and testing of transfer hoses

Documents
Document Sharing Hub

Full document details: BS ISO 16904-2:2024

National foreword

This British Standard is the UK implementation of ISO 16904-2:2024.

The UK participation in its preparation was entrusted to Technical Committee PSE/17/-/9, Liquefied Natural Gas (LNG) installations and equipment.

A list of organizations represented on this committee can be obtained on request to its committee manager.

Contractual and legal considerations

This publication has been prepared in good faith, however no representation, warranty, assurance or undertaking (express or implied) is or will be made, and no responsibility or liability is or will be accepted by BSI in relation to the adequacy, accuracy, completeness or reasonableness of this publication. All and any such responsibility and liability is expressly disclaimed to the full extent permitted by the law.

This publication is provided as is, and is to be used at the recipient's own risk.

The recipient is advised to consider seeking professional guidance with respect to its use of this publication.

This publication is not intended to constitute a contract. Users are responsible for its correct application.

© The British Standards Institution 2024
Published by BSI Standards Limited 2024

ISBN 978 0 539 27190 4

ICS 75.180.01

Compliance with a British Standard cannot confer immunity from legal obligations.

This British Standard was published under the authority of the Standards Policy and Strategy Committee on 29 February 2024.

Amendments/corrigenda issued since publication

Date	Text affected

Documents
Document Sharing Hub

Full document details: BS ISO 16904-2:2024

International Standard

ISO 16904-2

First edition
2024-01

Installation and equipment for liquefied natural gas — Design and testing of marine transfer systems —

Part 2: Design and testing of transfer hoses

Installations et équipements de gaz naturel liquéfié — Conception et essais des systèmes de transfert marins —

Partie 2: Conception et essais des flexibles de transfert

Reference number
ISO 16904-2:2024(en)

© ISO 2024

Documents
Document Sharing Hub

Full document details: BS ISO 16904-2:2024

COPYRIGHT PROTECTED DOCUMENT

© ISO 2024

All rights reserved. Unless otherwise specified, or required in the context of its implementation, no part of this publication may be reproduced or utilized otherwise in any form or by any means, electronic or mechanical, including photocopying, or posting on the internet or an intranet, without prior written permission. Permission can be requested from either ISO at the address below or ISO's member body in the country of the requester.

ISO copyright office
CP 401 • Ch. de Blandonnet 8
CH-1214 Vernier, Geneva
Phone: +41 22 749 01 11
Email: copyright@iso.org
Website: www.iso.org

Published in Switzerland

Documents
Document Sharing Hub

Full document details: BS ISO 16904-2:2024

Contents

Page

Foreword ..... **v**

1 Scope **1**

2 Normative references **1**

3 Terms, definitions and abbreviations **1**
3.1 Terms and definitions 1
3.2 Abbreviations 5

4 Applications and qualification categories **5**
4.1 Applications 5
4.2 Qualification categories 6

5 Description of typical LNG transfer hose assembly designs and accessories **6**
5.1 General 6
5.2 Mandatory components 7
5.3 Optional components 7
5.4 Typical construction of LNG transfer hose assemblies 7
5.4.1 Main hose categories 7
5.4.2 Corrugated metal hose assemblies 8
5.4.3 Thermoplastic multi-layer (non-vulcanized) hose assemblies (Composite hose assemblies) 10
5.4.4 Hose-in-hose with annular space 11

6 Design features of the LNG transfer hoses assemblies **12**
6.1 General 12
6.2 Transfer hose assembly technology design parameters 12
6.3 Project specific design parameters 13
6.3.1 Selection of hose assembly length 13
6.3.2 Service life 13
6.3.3 Selection of buoyancy and submersion 13
6.3.4 Selection of insulation 13
6.3.5 Selection of external protection 13
6.3.6 Selection of leak detection 13
6.4 Component details – End fitting 14
6.4.1 General 14
6.4.2 Termination 14
6.4.3 Connector 14
6.4.4 Bending stiffener/restrictor (optional) 15
6.5 Hose assembly handling / lifting device 15
6.6 Safety systems 15
6.6.1 Leak detection (optional) 15
6.6.2 Fire safety requirements 16
6.6.3 Electrical safety requirements 16
6.7 Connection to the ship 16
6.8 Hydraulic and electric control systems 16

7 Qualification requirements **16**
7.1 Foreword 16
7.2 Qualification process 16
7.2.1 General principle 16
7.2.2 Qualification levels specific requirements 17
7.2.3 Certification range definition from a tested hose assembly 18
7.2.4 Certification extension and update 19
7.3 Hose assembly tests 19
7.3.1 General 19
7.3.2 Hose assembly property characterization tests 20
7.3.3 Qualification tests with acceptance criteria 28

© ISO 2024 – All rights reserved

AVA Documents
Document Sharing Hub

Full document details: BS ISO 16904-2:2024

8 Quality assurance and control ... **37**
8.1 General ... 37
8.2 Material selection ... 37
8.3 Manufacturing ... 37
8.3.1 Manufacturing basics ... 37
8.3.2 Traceability ... 38
8.3.3 Marking ... 38
8.3.4 Packing and preservation ... 38
8.4 Factory acceptance tests ... 38
8.4.1 General ... 38
8.4.2 Tests to be performed on every hose assembly ... 39

9 Documentation ... **39**
9.1 Purchasing guidelines ... 39
9.2 Design, qualification and manufacturing documentation ... 39
9.3 As-built documentation/manufacturing Data Book ... 39
9.4 Operation manual ... 40

Annex A (informative) **Purchasing guidelines table** ... **41**

Annex B (informative) **Guidelines for additional testing program** ... **43**

Annex C (informative) **Guidelines for Hose Qualification Categories (HQCs) selection** ... **50**

Annex D (informative) **Surge pressure considerations for LNG hose assemblies** ... **52**

Annex E (informative) **Pressure leak tests - justification about maximum allowed permeability rate and leak detection value** ... **53**

Bibliography ... **55**

© ISO 2024 – All rights reserved

Documents
Document Sharing Hub
Full document details: BS ISO 16904-2:2024

Foreword

ISO (the International Organization for Standardization) is a worldwide federation of national standards bodies (ISO member bodies). The work of preparing International Standards is normally carried out through ISO technical committees. Each member body interested in a subject for which a technical committee has been established has the right to be represented on that committee. International organizations, governmental and non-governmental, in liaison with ISO, also take part in the work. ISO collaborates closely with the International Electrotechnical Commission (IEC) on all matters of electrotechnical standardization.

The procedures used to develop this document and those intended for its further maintenance are described in the ISO/IEC Directives, Part 1. In particular, the different approval criteria needed for the different types of ISO document should be noted (see www.iso.org/directives).

ISO draws attention to the possibility that the implementation of this document may involve the use of (a) patent(s). ISO takes no position concerning the evidence, validity or applicability of any claimed patent rights in respect thereof. As of the date of publication of this document, ISO had not received notice of (a) patent(s) which may be required to implement this document. However, implementers are cautioned that this may not represent the latest information, which may be obtained from the patent database available at www.iso.org/patents. ISO shall not be held responsible for identifying any or all such patent rights.

Any trade name used in this document is information given for the convenience of users and does not constitute an endorsement.

For an explanation of the voluntary nature of standards, the meaning of ISO specific terms and expressions related to conformity assessment, as well as information about ISO's adherence to the World Trade Organization (WTO) principles in the Technical Barriers to Trade (TBT), see www.iso.org/iso/foreword.html.

This document was prepared by the European Committee for Standardization (CEN) (as EN 1474-2:2020+AC:2023) and drafted in accordance with its editorial rules. It was assigned to Technical Committee ISO/TC 67, *Oil and gas industries including lower carbon energy*, Subcommittee SC 9, *Production, transport and storage facilities for cryogenic liquefied gases* and adopted without modification.

Any feedback or questions on this document should be directed to the user's national standards body. A complete listing of these bodies can be found at www.iso.org/members.html.

© ISO 2024 – All rights reserved

Documents
Document Sharing Hub

Full document details: BS ISO 16904-2:2024

Documents
Document Sharing Hub

Installation and equipment for liquefied natural gas — Design and testing of marine transfer systems —

Part 2:
Design and testing of transfer hoses

1 Scope

This document gives general guidelines for the design, material selection, qualification, certification, and testing details of hose assemblies for Liquefied Natural Gas (LNG) marine transfer applications.

The transfer hose assemblies are part of transfer systems (it means that they may be fitted with ERS, QCDC, handling systems, hydraulic and electric components etc.) To avoid unnecessary repetition, cross-references to EN ISO 16904 and EN 1474-3 are made for all compatible items, and for references, definitions and abbreviations. Where additional references, definitions and abbreviations are required specifically for LNG hose assemblies, they are listed in this document.

2 Normative references

The following documents are referred to in the text in such a way that some or all of their content constitutes requirements of this document. For dated references, only the edition cited applies. For undated references, the latest edition of the referenced document (including any amendments) applies.

EN 1474-1:2008, *Installation and equipment for liquefied natural gas — Design and testing of marine transfer systems — Part 1: Design and testing of transfer arms*

EN 1474-3:2008, *Installation and equipment for liquefied natural gas - Design and testing of marine transfer systems - Part 3: Offshore transfer systems*

EN ISO 7369:2004, *Pipework - Metal hoses and hose assemblies - Vocabulary (ISO 7369:2004)*

EN ISO 8330:2014, *Rubber and plastics hoses and hose assemblies - Vocabulary (ISO 8330:2014)*

EN ISO 10012:2003, *Measurement management systems - Requirements for measurement processes and measuring equipment (ISO 10012:2003)*

EN ISO 10619-1:2018, *Rubber and plastics hoses and tubing - Measurement of flexibility and stiffness - Part 1: Bending tests at ambient temperature (ISO 10619-1:2017)*

EN ISO 16904:2016, *Petroleum and natural gas industries - Design and testing of LNG marine transfer arms for conventional onshore terminals (ISO 16904:2016)*

3 Terms, definitions and abbreviations

3.1 Terms and definitions

For the purposes of this document, the terms and definitions given in EN ISO 7369:2004 and EN ISO 8330:2014 and the following apply.

ISO and IEC maintain terminological databases for use in standardization at the following addresses:

— IEC Electropedia: available at https://www.electropedia.org/

© ISO 2024 – All rights reserved

Documents
Document Sharing Hub

Full document details: BS ISO 16904-2:2024

— ISO Online browsing platform: available at https://www.iso.org/obp

3.1.1
annular space
space between the inner fluid carrying layer and a second layer which can be used for insulation and/or safety purposes

3.1.2
armour layer
either a braid made of wires (see braid) or strips of metal or plastic used to provide pressure strength and/or external protection

3.1.3
axial stiffness
extent to which a hose assembly resists tensile deformation in response to an applied axial force

3.1.4
bend stiffness
ability of a flexible pipe to resist deflection when subjected to bending loads at constant tension, pressure and temperature

3.1.5
bend restrictor
device for limiting the bend radius by mechanical means

Note 1 to entry: A bend restrictor typically comprises a series of interlocking metallic or moulded rings, applied over the outer surface.

3.1.6
bending stiffener
ancillary conical shaped component, which locally supports the pipe to limit bending stresses and curvature of the pipe to acceptance levels

Note 1 to entry: Bend stiffeners may be either attached to an end fitting or a support structure where the flexible pipe passes through the bend stiffener.

3.1.7
boil-off gas
BOG
natural evaporation from liquefied natural gas due to vaporization

3.1.8
burst test
test conducted on a hose sample until it failed by internal pressurization

3.1.9
buoyancy
degree, to which the hose assembly has buoyancy capabilities calculated according to 7.3.2.6

3.1.10
connector
part of the end fitting used to provide a leak-tight structural connection between the end fitting and adjacent piping

3.1.11
crush test
application of a vertical load through a beam placed laterally across the hose assembly

3.1.12
double-envelope
layer or set of layers effecting the enclosure, and thus the isolation from the environment, of those structures, systems and components whose failure can lead to an unacceptable release of LNG

© ISO 2024 – All rights reserved

Documents
Document Sharing Hub
Full document details: BS ISO 16904-2:2024

3.1.13
dynamic load
loads to flexible hose assembly or hose assembly configuration which vary in time, or whose deflections or boundary conditions vary in time, while hose is connected

3.1.14
emergency release system
ERS
system that provides a positive means of quick release of transfer system and safe isolation of LNG carrier and transfer system

Note 1 to entry: The ERS consists of an emergency release coupling (ERC) and interlocked isolating valves which automatically close on both sides, thereby containing the LNG or vapour in the lines (dry disconnect), and, if applicable, associated control system.

3.1.15
end termination
mechanical device which forms the transition between the flexible pipe body and the connector whose different pipe layers are terminated in the end fitting in such a way as to transfer the load between the flexible hose assembly and the connector

3.1.16
end fitting
assembly of connector and end termination

3.1.17
emergency release coupler
ERC
device to provide a means of quick release of the transfer system when such actions is required only as an emergency measure

3.1.18
fatigue life
number of cycles of a specified character that a given specimen sustains before failure of a specified nature occurs

3.1.19
hose assembly
hose and its fittings

3.1.20
impact test
test for determining the impact strength of a material

3.1.21
leak detection system
system able to detect a failure / leak from the fluid carrying part of the hose assembly

3.1.22
liquefied natural gas
LNG
natural gas that has been cooled and condensed into liquid form

3.1.23
maximum allowable impact energy
MAIE
maximum impact energy which can be applied to the hose assembly without bringing permanent damage to the hose assembly structure and performances

© ISO 2024 – All rights reserved

Documents
Document Sharing Hub

Full document details: BS ISO 16904-2:2024

3.1.24
maximum allowable crush load
MACL
maximum allowable crush load which can be applied to the hose assembly without bringing permanent damage to the hose assembly structure and performances

3.1.25
maximum allowable working pressure
MAWP
maximum pressure (gauge) across the entire specified temperature range to which the hose may be exposed and operated

Note 1 to entry: It is commonly used by terminals to define their cargo system pressure capabilities (i.e. pump shut-in plus any static head or cargo system safety valve relief setting.

Note 2 to entry: This pressure rating is not expected to account for dynamic surge pressures, but does include nominal pressure variations during cargo transfer operations).

3.1.26
maximum working load
MWL
maximum allowable tensile force of the hose assembly in axial direction, applied to the end-fittings

3.1.27
minimum Bend Radius
MBR
minimum radius at which the hose assembly is designed to operate

3.1.28
non-destructive test
ND
test that is not expected to cause permanent damage to the hose assembly, so that the hose assembly can be used in subsequent tests and for operation as well

3.1.29
owner
business entity who has the legal or rightful title to the asset intended for LNG transfer

3.1.30
proof pressure
pressure to which the hose assembly is tested (i.e. during a Factory Acceptance Test) to demonstrate its structural integrity when subject to internal pressure

Note 1 to entry: According to the IMO IGC Code this pressure test at ambient temperature shall be not less than 1,5 x MAWP and not more than two-fifths of its burst pressure.

3.1.31
pumping port
connection to attach a vacuum pump for vacuum insulated hose assemblies

3.1.32
quick connect disconnect coupler
QCDC
manual or hydraulic mechanical device used to connect a transfer arm or hose to the cargo manifold without employing bolts

3.1.33
service life
period of time during which the hose assembly fulfils all performance requirements for the specified or less severe condition in the same Hose Qualification Category

© ISO 2024 – All rights reserved

Documents
Document Sharing Hub
Full document details: BS ISO 16904-2:2024

3.1.34
static load
flexible hose assemblies not exposed to significant cyclically varying loads or deflections during normal operations

3.1.35
storage bend radius
minimum radius at which the hose assembly is designed to be stored or handled. SBR may be lower than MBR

3.1.36
super-insulation
several high reflecting foils to reduce heat transfer via radiation as part of a vacuum insulation system

3.1.37
type approval certificate
certificate issued by an IVA confirming the suitability and appropriate limits on the manufacturer's design methodologies, manufacturing processes and materials

Note 1 to entry: The name of this certificate can differ according to the IVA.

3.1.38
visual inspection
examination of parts and equipment for visible defects in material and workmanship

3.2 Abbreviations

D	internal bore diameter of the hose assembly
FAT	factory acceptance test
FSRU	floating Storage Regasification Unit
HQC	hose qualification category
IVA	Independent verification agency
L	Length of flexible part of the hose assembly
LNGC	liquefied natural gas carrier
MAAT	Maximum allowable applied twist

4 Applications and qualification categories

4.1 Applications

This subclause describes the main application using LNG transfer hose assemblies.

As industry and technology is developing, other type of application may consider using LNG transfer hose assemblies and shall be covered in this standard.

List of applications (not exhaustive):

— Offshore tandem FLNG offloading / loading aerial or floating;

— Ship-To-Ship transfer such as LNGC to FSRU, LNG Bunkering;

— Shore-To-Ship such as LNG bunkering;

— Ship-To-Shore such as offloading / loading.

© ISO 2024 – All rights reserved

AVA Documents
Document Sharing Hub

Full document details: BS ISO 16904-2:2024

Based on the application and use of the hose assembly, there are different categories of hose assembly qualification required. Main difference are the dynamic loads on the hose assembly. The following subclause introduces Hose assembly Qualification Categories (HQC).

NOTE Guidelines for the owners regarding applications and relevant HQC are available in Annex C. Selection of HQC remains the owner's responsibility.

4.2 Qualification categories

This subclause establishes criteria for definition of Hose Qualification Categories for the hose assemblies covered by this standard. The Hose Qualification Categories specified below define different design verification requirements as per subclause 7.2.2.

The test scope within all Qualification Categories define the basis for the hose assemblies qualification but are independent of each project specific data (metocean data, waves & current data,). During the design for a project the required HQC should be checked by the owner and / or IVA.

The owner / IVA can require executing additional tests in order to determine if the proposed hose assembly is "Fit for Purpose" (For fatigue test for example, specific attention should be paid on bending loads adjacent to end terminations)

— Hose Qualification Category A

  This HQC is intended to be used for quasi-static applications (i.e. application only driven by handling and/or thermal and pressure fatigue).

  This category is including the performance requirements applicable to all aerial transfer hose assembly, typically transfer hose assemblies used in protected environment for intermittent usage without contact with water and with negligible dynamic motions.

— Hose Qualification Category B

  This HQC is intended to be used for dynamic applications driven by aerial transfer fatigue including significant tensile and bending fatigue loads (e.g. by vessel motions or wind loads).

  This Category is including the performance requirements applicable to all aerial transfer hose assemblies and typically applicable for the hose assemblies used in combination of weather exposed environment and/or permanent usage and used in configurations with contact with floating structures.

— Hose Qualification Category C

  This HQC is intended to be used for dynamic applications for submerged or floating hose assemblies.

  Qualification tests for this category includes representative tests of contact with water such as insulation, water tightness properties and permanent connection potential issues.

The hose assemblies manufacturer shall propose a fatigue assessment methodology, to be applied at project phase, verifying that the hose assembly is fit for purpose for the intended application.

The methodology shall be validated by an IVA.

5 Description of typical LNG transfer hose assembly designs and accessories

5.1 General

This standard is addressing hose assemblies as a flange-to-flange component.

It means that all statements and requirements based on the hose assemblies shall be considered between conveyed fluid tightening surfaces at both ends.

© ISO 2024 – All rights reserved

Documents
Document Sharing Hub
Full document details: BS ISO 16904-2:2024

5.2 Mandatory components

An LNG Transfer Hose assembly shall consist of the following:

— flexible part of the hose assembly

— associated end fittings

Hose extremity end fittings can permit the mounting of a QCDC or a spool piece or permit direct connection to LNGC or LNG terminal or another hose assembly.

NOTE A description of QCDC is given in EN ISO 16904:2016, for transfer system reference is made to EN 1474-3:2008.

Hose extremity end fittings can permit the mounting of an emergency release system with valves and ERC (Emergency Release Coupler).

(A description of emergency release system is given in EN ISO 16904:2016 and EN 1474-3:2008).

— permanent identification marks

— hose handling device(s) (pad eye or lifting lugs, lifting collar, …).

Hose assembly shall include necessary fittings for safe handling, coupling and uncoupling either from the LNGC or the onshore or offshore LNG terminal system as required by the system design according to EN 1474-3:2008.

5.3 Optional components

An LNG Transfer Hose assembly can consist of the following:

— leak detection system

If required by the owner, the hose assembly shall incorporate leak detection system e.

— insulation system (to minimize build-up of external ice)

— intermediate leak barrier(s)

— bending stiffeners or restrictors

— buoyancy

— weight elements

— specific supporting equipment

Hose assembly can support (e.g. piggy back mounted) hydraulic or pneumatic hoses, electric cables for the powering of the ERS and QCDC systems according to EN ISO 16904:2016, Clause 6.

5.4 Typical construction of LNG transfer hose assemblies

5.4.1 Main hose categories

At present LNG transfer hose assemblies are categorized in three types according to their method of construction:

— those based on a reinforced corrugated metal hose construction, hereafter called corrugated metal hose;

— those based on a construction in which polymeric films and fabrics are entrapped between a pair of close wound helical wires, hereafter called composite hose;

© ISO 2024 – All rights reserved

Documents
Document Sharing Hub
Full document details: BS ISO 16904-2:2024

— those based on a hose-in-hose construction with annular space and which can derivate from one of the above technologies.

— as the technology develops, other types of hose assemblies can become available and are also to be considered covered by this document.

5.4.2 Corrugated metal hose assemblies

A corrugated metal hose assembly consists of a core layer made of a stainless-steel corrugations, and several other layers, metallic or non-metallic, reinforcing mechanical strength of the flexible part of the hose assembly.

In sequence, starting from the bore, typical construction is as follow:

a) Inner layer, made of stainless-steel corrugations (parallel of helical corrugated sometimes called bellows), parallel or helicoidal construction. Ensures the inner leakproofness of the structure, as well as sustaining the radial pressure.

b) Armours layers, made of steel or textile, supporting the axial loads and reinforcing inner radial pressure resistance.

c) Optionally, thermal insulation layers, ensuring that the inner temperature is conserved whilst preventing any build-up of ice on the exterior of the hose assembly.

d) Optionally, Outer layers, protecting the hose assembly from external mechanical damages. These layers might be leak-proof, giving the hose assembly a double envelope (with an annulus between) thus permitting the detection of any leak of LNG as soon as it can occur. In case of a leak in the inner layer, the outer layer can be able to withstand some pressure at some temperature during certain amount of time.

The external layer, if leak-proof, prevents any ingress of water and air from the exterior.

The number, arrangement and sequence of the layers in steps b) to d) is specific to the hose assembly size and application and can vary based on metallic hose assembly technology.

The hose assembly construction shall ensure that all materials are used within their individual range of temperature.

© ISO 2024 – All rights reserved

Documents
Document Sharing Hub

Full document details: BS ISO 16904-2:2024

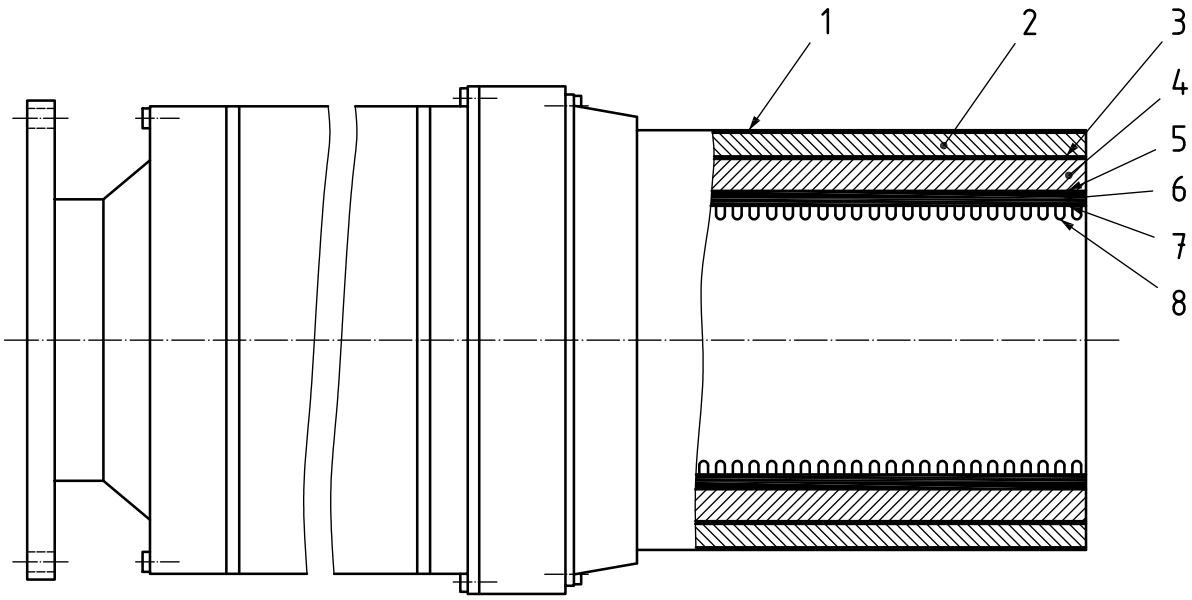

Key

1 leakproof layer
2 insulation
3 leakproof layer
4 insulation
5 supporting layer
6 armouring
7 leakproof layer
8 corrugated inner pipe

Figure 1 — Typical hose assembly – reinforced corrugated metal hose family

Depending on the design, the outer leak proof layer can be a corrugated stainless-steel pipe similar to the inner pipe. In this case the annular gap between inner and outer pipe can be evacuated. The pressure supervision of this annular gap results in a leak detection of inner and outer pipe. The thermal insulation can be maintained by layers of super insulation inside the evacuated annular gap.

© ISO 2024 – All rights reserved

Documents
Document Sharing Hub
Full document details: BS ISO 16904-2:2024

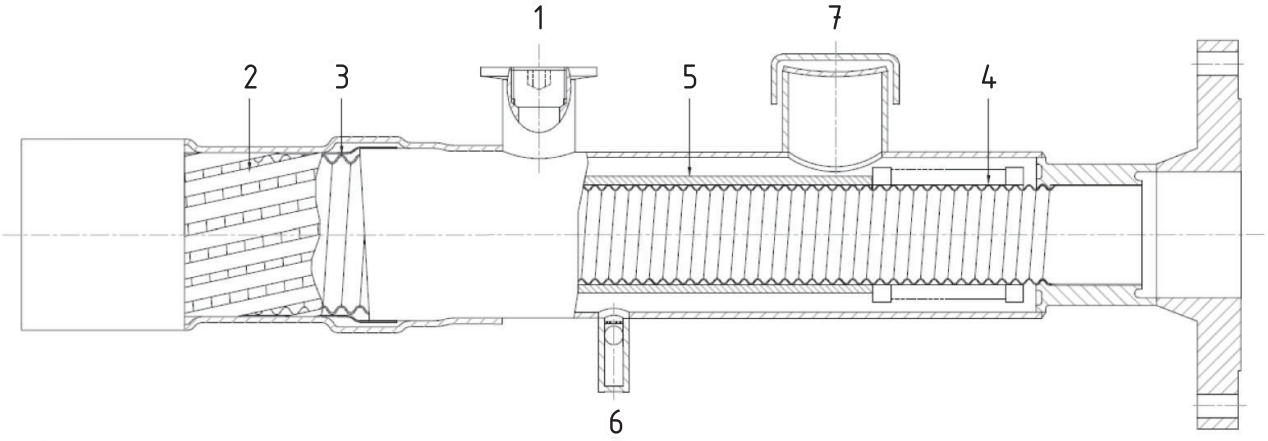

Key

1 pumping port
2 armouring
3 corrugated outer pipe
4 corrugated inner pipe
5 vacuum superinsulation
6 vacuum supervision leak detection
7 burst disc

Figure 2 — Typical hose assembly – Sketch of an LNG flexible hose with vacuum insulation option

5.4.3 Thermoplastic multi-layer (non-vulcanized) hose assemblies (Composite hose assemblies)

A composite hose assembly consists of un-bonded, multiple polymeric film and fabric layers bounded between two wire helices which give the flexible part of the hose assembly its shape, one being internal and one being external. Broadly, the film layers provide a fluid-tight barrier to the conveyed product and the fabric layers provide the mechanical strength of the flexible part of the hose assembly. Additional layers for insulation may be added

In sequence, starting from the bore, the construction typically consists of:

a) inner metallic wire helix applied at a pre-determined close pitch;

b) polymeric fabric layers forming the bore material;

c) pack of many polymeric film layers. The complete film pack achieves a tubular form and provides the fluid tight barrier to the conveyed product;

d) pack of many polymeric fabric layers which reinforce the flexible part of the hose assembly;

e) outer metallic wire helix applied at half a pitch offset to the inner wire under tension. This forms the flexible part of the hose assembly into the required convoluted structure.

The number and arrangement of the layers in steps c) and d) is specific to the hose assembly size and application. The polymeric film and fabric materials are selected to be compatible with the conveyed product and the extremes of operating temperature.

© ISO 2024 – All rights reserved

Documents
Document Sharing Hub
Full document details: BS ISO 16904-2:2024

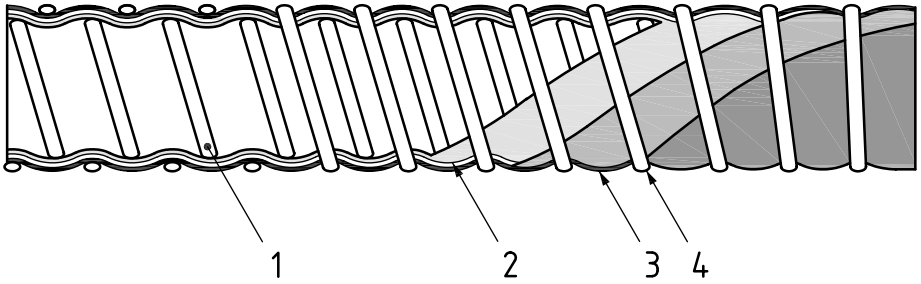

a)

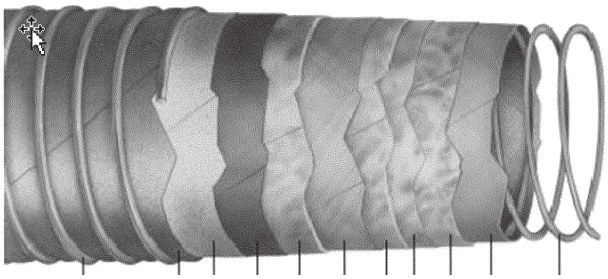

b)

Key

1 inner wire
2 film
3 fabric
4 outer wire

Figure 3 — Typical hose assembly – composite hose family

5.4.4 Hose-in-hose with annular space

Hose assembly of this category shall comprise:

— An inner hose, based on composite hose or stainless-steel corrugated hose technologies, able to withstand cryogenic temperatures and MAWP without limit of time.

— An annular space that can ensure one of or all the following functions:

  — Thermal insulation.

    Thermal insulation is achieved by filling the annulus with material of low thermal conductivity, or by vacuuming the annulus, filled with an arrangement of metalized films and spacers (super-insulation).

  — Buoyancy

  — Leak detection

— An outer hose that can ensure one of or all the following functions:

  — Tightness in order to protect the inner hose from the external environment, to prevent from water and air ingress into the annular space.

  — Protection of the inner hose from impacts and crush loads.

  — Protection of the inner hose from excessive loads or bending.

© ISO 2024 – All rights reserved

Documents
Document Sharing Hub
Full document details: BS ISO 16904-2:2024

  - Prevention of leakage or spillage in case of loss of primary containment. Proving this feature is not addressed by this standard.

- A leak detection system able to detect a failure of the inner hose

6 Design features of the LNG transfer hoses assemblies

6.1 General

The hose assembly forms part of an overall system for the transfer of LNG – for the requirements which will dictate the exact design of the hose assembly (e.g. static load and dynamic movements, …) refer to EN 1474-3:2008. The design process and required information is outlined below.

Two design features categories shall be considered:

- Transfer Hose technology design parameters (listed in subclause 6.2)

  These are parameters which are intrinsically related to the product and constitute the minimum requirements to be defined for the certification of the LNG transfer hoses assemblies

- Project Specific Design Parameters (listed in subclause 6.3)

  These are project related parameters that define optional additional requirements to ensure the transfer hose assembly is fit for purpose. These parameters do not impact the certification which is based on Transfer Hose Assembly technology design parameters.

6.2 Transfer hose assembly technology design parameters

Following parameters are directly related to the hose assembly design and technology and shall be established by the manufacturer:

- Hose inner diameter for the flexible part of the hose assembly.
- Connector internal diameter, if different from flexible part of the hose assembly.
- Temperature range.
- Maximum Allowable Velocity - This parameter shall be comprised in a range from 7 to 12 m/s maximum for liquid.
- Maximum Allowable Working Pressure.
- Material compatibility:
  - With conveyed fluid
  - With external environment
- Maximum Allowable Twist.
- Maximum Allowable Axial Load.
- Minimum Bending Radius.
- Storage Bending Radius.
- Maximum allowable impact load for regular service conditions.
- Maximum allowable crush load for regular service conditions.

These parameters shall be mentioned in the Type Approval Certificate.

© ISO 2024 – All rights reserved

Documents
Document Sharing Hub
Full document details: BS ISO 16904-2:2024