BS ISO 17440:2014

BSI Standards Publication

Cranes — General design — Limit states and proof of competence of forged steel hooks

bsi.

...making excellence a habit.™

Document Sharing Hub

National foreword

This British Standard is the UK implementation of ISO 17440:2014.

The UK participation in its preparation was entrusted to Technical Committee MHE/3/3, Bridge, gantry and slewing jib cranes.

A list of organizations represented on this committee can be obtained on request to its secretary.

This publication does not purport to include all the necessary provisions of a contract. Users are responsible for its correct application.

© The British Standards Institution 2014.
Published by BSI Standards Limited 2014

ISBN 978 0 580 76509 4
ICS 53.020.20

Compliance with a British Standard cannot confer immunity from legal obligations.

This British Standard was published under the authority of the Standards Policy and Strategy Committee on 31 May 2014.

Amendments/corrigenda issued since publication

Date	Text affected

Documents
Document Sharing Hub

Full document details: BS ISO 17440:2014

INTERNATIONAL STANDARD

ISO 17440

First edition
2014-06-01

Cranes — General design — Limit states and proof of competence of forged steel hooks

Appareils de levage à charge suspendue — Conception générale — États limites et vérification d'aptitude des crochets forgés

Reference number
ISO 17440:2014(E)

Documents
Document Sharing Hub
© ISO 2014

Full document details: BS ISO 17440:2014

COPYRIGHT PROTECTED DOCUMENT

© ISO 2014

All rights reserved. Unless otherwise specified, no part of this publication may be reproduced or utilized otherwise in any form or by any means, electronic or mechanical, including photocopying, or posting on the internet or an intranet, without prior written permission. Permission can be requested from either ISO at the address below or ISO's member body in the country of the requester.

ISO copyright office
Case postale 56 • CH-1211 Geneva 20
Tel. + 41 22 749 01 11
Fax + 41 22 749 09 47
E-mail copyright@iso.org
Web www.iso.org

Published in Switzerland

© ISO 2014 – All rights reserved

Documents
Document Sharing Hub

Full document details: BS ISO 17440:2014

Contents

Page

Foreword ... **v**

1 Scope ... **1**

2 Normative references ... **1**

3 Terms, definitions and symbols ... **2**

4 General requirements ... **5**
4.1 Materials ... 5
4.2 Workmanship ... 6
4.3 Manufacturing tolerances ... 6
4.4 Heat treatment ... 7
4.5 Proof loading ... 7
4.6 Hook body geometry ... 8
4.7 Hook shank machining ... 9
4.8 Nut ... 10
4.9 Hook suspension ... 11

5 Static strength ... **11**
5.1 General ... 11
5.2 Vertical design load ... 11
5.3 Horizontal design force ... 12
5.4 Bending moment of the shank ... 12
5.5 Hook body, design stresses ... 16
5.6 Hook shank, design stresses ... 18
5.7 Hook, proof of static strength ... 19

6 Fatigue strength ... **20**
6.1 General ... 20
6.2 Vertical fatigue design force ... 20
6.3 Horizontal fatigue design force ... 21
6.4 Fatigue design bending moment of shank ... 21
6.5 Proof of fatigue strength, hook body ... 22
6.6 Proof of fatigue strength, hook shank ... 27
6.7 Fatigue design of hook shanks for serially produced hooks ... 36

7 Verification of conformity with the requirements ... **36**
7.1 General ... 36
7.2 Verification of manufacture ... 36
7.3 Proof loading ... 36
7.4 None destructive testing (NDT) ... 36
7.5 Test sampling ... 37

8 Information for use ... **37**
8.1 Maintenance and inspection ... 37
8.2 Marking ... 37
8.3 Safe use ... 38

Annex A (informative) **Sample sets of single point hooks** ... **39**

Annex B (informative) **Sample set of ramshorn hooks** ... **46**

Annex C (informative) **Annexes A and B static limit design forces for hook bodies** ... **48**

Annex D (informative) **Annexes A and B fatigue limit design forces for hook bodies** ... **50**

Annex E (normative) **Hook body calculation and specific spectrum ratio factors** ... **52**

Annex F (informative) **Sample fatigue strength calculations of proofed hooks (with proof load applied)** ... **56**

Annex G (informative) **Sample set of hook shank and thread designs** ... **62**

AVA Documents
Document Sharing Hub

© ISO 2014 – All rights reserved

Full document details: BS ISO 17440:2014

Annex H (normative) **Bending of curved beams** **68**

Annex I (normative) **Calculation of hook suspension tilting resistance, articulation by a hinge or rope reeving system** **71**

Annex J (informative) **Guidance for selection of hook size using Annexes C to E** **75**

Annex K (normative) **Information to be provided by the hook manufacturer** **77**

Bibliography **78**

© ISO 2014 – All rights reserved

Documents
Document Sharing Hub
Full document details: BS ISO 17440:2014

Foreword

ISO (the International Organization for Standardization) is a worldwide federation of national standards bodies (ISO member bodies). The work of preparing International Standards is normally carried out through ISO technical committees. Each member body interested in a subject for which a technical committee has been established has the right to be represented on that committee. International organizations, governmental and non-governmental, in liaison with ISO, also take part in the work. ISO collaborates closely with the International Electrotechnical Commission (IEC) on all matters of electrotechnical standardization.

The procedures used to develop this document and those intended for its further maintenance are described in the ISO/IEC Directives, Part 1. In particular the different approval criteria needed for the different types of ISO documents should be noted. This document was drafted in accordance with the editorial rules of the ISO/IEC Directives, Part 2. www.iso.org/directives

Attention is drawn to the possibility that some of the elements of this document may be the subject of patent rights. ISO shall not be held responsible for identifying any or all such patent rights. Details of any patent rights identified during the development of the document will be in the Introduction and/or on the ISO list of patent declarations received. www.iso.org/patents

Any trade name used in this document is information given for the convenience of users and does not constitute an endorsement.

For an explanation on the meaning of ISO specific terms and expressions related to conformity assessment, as well as information about ISO's adherence to the WTO principles in the Technical Barriers to Trade (TBT) see the following URL: Foreword - Supplementary information

The committee responsible for this document is ISO/TC 96, *Cranes*, Subcommittee SC 8, *Jib cranes*.

© ISO 2014 – All rights reserved

Documents
Document Sharing Hub
Full document details: BS ISO 17440:2014

Documents
Document Sharing Hub

Full document details: BS ISO 17440:2014

INTERNATIONAL STANDARD ISO 17440:2014(E)

Cranes — General design — Limit states and proof of competence of forged steel hooks

1 Scope

This International Standard is intended to be used together with the other relevant International Standards in its series. As such, they specify general conditions, requirements and methods to prevent hazards in hooks as part of all types of cranes.

This International Standard covers the following parts of hooks and types of hooks:

— bodies of any type of point hooks made of steel forgings;

— machined shanks of hooks with a thread/nut suspension.

NOTE 1 The principles of this International Standard can be applied to other types of shank hooks and also where stress concentration factors relevant to that shank construction are determined and used. Plate hooks, which are those assembled from one or several parallel parts of rolled steel plates are not covered in this International Standard.

This International Standard is applicable to hooks from materials with ultimate strength of not more than 800 N/mm^2 and yield stress of not more than 600 N/mm^2.

The following is a list of significant hazardous situations and hazardous events that could result in risks to persons during normal use and foreseeable misuse. Clauses 4 to 8 of this document are necessary to reduce or eliminate the risks associated with the following hazards:

a) exceeding the limits of strength (yield, ultimate, fatigue);

b) exceeding temperature limits of material;

c) unintentional disengagement of the load from the hook.

The requirements of this International Standard are stated in the main body of the document and are applicable to hook designs in general. The hook body and shank designs listed in Annexes A, B and G are only examples and should not be referred to as requirements of this International Standard.

This International Standard is applicable to cranes manufactured after the date of its publication, and serves as a reference base for product standards of particular crane types.

NOTE 2 This International Standard deals only with the limit state method in accordance with ISO 8686-1.

2 Normative references

The following documents, in whole or in part, are normatively referenced in this document and are indispensable for its application. For dated references, only the edition cited applies. For undated references, the latest edition of the referenced document (including any amendments) applies.

ISO 148-1, *Metallic materials — Charpy pendulum impact test — Part 1: Test method*

ISO 148-2, *Metallic materials — Charpy pendulum impact test — Part 2: Verification of testing machines*

ISO 643, *Steels — Micrographic determination of the apparent grain size*

ISO 965-1, *ISO general purpose metric screw threads — Tolerances — Part 1: Principles and basic data*

© ISO 2014 – All rights reserved

Documents
Document Sharing Hub
Full document details: BS ISO 17440:2014

ISO 4287, *Geometrical Product Specifications (GPS) — Surface texture: Profile method — Terms, definitions and surface texture parameters*

ISO 4306-1, *Cranes — Vocabulary — Part 1: General*

ISO 4301-1, *Cranes and lifting appliances — Classification — Part 1: General*

ISO 6892-1, *Metallic materials — Tensile testing — Part 1: Method of test at room temperature*

ISO 8686-1, *Cranes — Design principles for loads and load combinations — Part 1: General*

ISO 9327-1, *Steel forgings and rolled or forged bars for pressure purposes — Technical delivery conditions — Part 1: General requirements*

ISO 7500-1, *Metallic materials — Verification of static uniaxial testing machines — Part 1: Tension/compression testing machines — Verification and calibration of the force-measuring system*

ISO 12100, *Safety of machinery — General principles for design — Risk assessment and risk reduction*

ISO 15579, *Metallic materials — Tensile testing at low temperature*

EN 10228-3, *Non-destructive testing of steel forgings — Part 3: Ultrasonic testing of ferritic or martensitic steel forgings*

EN 10243-1, *Steel die forgings — Tolerances on dimensions — Part 1: Drop and vertical press forgings*

3 Terms, definitions and symbols

For the purposes of this document, the terms and definitions given in ISO 12100 and ISO 4306-1 and the following terms, definitions and symbols (see Table 1) apply.

3.1
hook shank
upper part of the hook, from which the hook is suspended to the hoist media of the crane

3.2
hook body
lower, curved part of the hook below the shank

3.3
hook seat
bottom part of the hook body, where the load lifting attachment is resting

3.4
hook suspension articulation
feature of the hook suspension, allowing the hook to tilt along the inclined load line

© ISO 2014 – All rights reserved
Documents
Document Sharing Hub
Full document details: BS ISO 17440:2014

Table 1 — Symbols

Symbol	Description
A_{d1}	Cross section area of the forged, shank
A_{d4}	Cross section area of the critical section of hook shank
A_v	Minimum impact toughness of material
a	Acceleration
a_1	Seat circle diameter
a_2	Throat opening
a_3	Height of the hook point
b_{max}	Maximum width in the critical hook body section
b_{ref}	Reference width
C	Total number of working cycles during the design life of crane
C_t	Relative tilting resistance of the hook suspension
c_e	Coefficient for load eccentricity
D	Cumulative damage in fatigue (Palmgren-Miner hypothesis)
d_1	Diameter of the forged shank
d_3	Principal diameter of thread
d_4	Diameter of the undercut section of the shank
d_5	Thread core diameter
e_R	Distance of the vertical load line from the centre line of the shank
F	Vertical force
F_H	Vertical force on hook due to occasional or exceptional loads
$F_{Rd,s}$, $F_{Rd,f}$	Limit design forces, static / fatigue
$F_{Sd,s}$	Vertical design force for the proof of static strength
$F_{Sd,f}$	Vertical design force for the proof of fatigue strength
f_1, f_2, f_3	Factors of further influences
f_{Rd}	Limit design stress
f_y	Yield stress
f_u	Ultimate strength
g	Acceleration due to gravity, g = 9,81 m/s^2
$H_{Sd,s}$	Horizontal design force of hook
$H_{Sd,f}$	Horizontal design force for the proof of fatigue strength
h_1, h_2	Section heights of the hook body
h	Vertical distance from the seat bottom of the hook body to the centre of the articulation
h_s	Vertical distance from the seat bottom of the hook body to critical section of hook shank
i	Index for a lifting cycle or a stress cycle
I	Reference moment of inertia for curved beam
I_{d1}	Moment of inertia of the forged shank
I_{d4}	Moment of inertia of the critical section of hook shank
k_C	Conversion factor for stress spectrum and classified duty
k_h, k_s	Stress spectrum factors
kQ	Load spectrum factor, in accordance with ISO 8686-1

© ISO 2014 – All rights reserved

AVA Documents
Document Sharing Hub
Full document details: BS ISO 17440:2014

Table 1 *(continued)*

Symbol	Description
k_5^*, k_6^*	Specific spectrum ratio factors, m = 5 / 6
lg	Log to the base of 10
M_1, M_2, M_3, M_4	Bending moments of hook shank
$M_{1,f,i}$, $M_{2,f,i}$, $M_{3,f,i}$	Bending moments of hook shank for the proof of fatigue strength, lifting cycle *i*
$M_{Sd,s}$	Static design bending moment
m	Slope parameter of the characteristic fatigue design curve
m_{RC}	Mass of rated hoist load
m_i	Mass of the hook load in a lifting cycle *i*
N	Total number of stress cycles / lifting cycles
N_D	Reference number of stress cycles, ND = 2 × 10^6
p	Pitch of thread
p_a	Average number of accelerations related to one lifting cycle
R	Radius of hook body curvature
R_a	Average depth of surface profile according to ISO 4287
R_z	Maximum depth of surface profile according to ISO 4287
r_9	Relief radius of the undercut
r_{th}	Thread bottom radius
s	Length of undercut
s_h, s_s	Stress history parameters
s_Q	Load history parameter
t	Depth of thread
T	Operation temperature
u_S, u_T	Depths of notches
α	Angle
α_S, α_T	Stress concentration factors
β	Angle or direction of hook inclination
β_n, β_{nS}, β_{nT}	Notch effect factors
ϕ_2	Dynamic factor for hoisting an unrestrained grounded load
ϕ_5	Dynamic factor for changes of acceleration of a movement
γ_n	Risk coefficient
γ_p	Partial safety factor
γ_m	General resistance coefficient
γ_{sm}	Specific resistance coefficient
γ_{Hf}, γ_{Sf}	Fatigue strength specific resistance factors
η_1	Edge distance of a hook body section
ν	Factor for load component
νh, νs	Relative numbers of stress cycles
μ	Factor for mean stress influence
σ_a	Shank stress due to axial force
σ_b	Shank stress due to bending moment
σ_m	Mean stress in a stress cycle

© ISO 2014 – All rights reserved
Documents
Document Sharing Hub
Full document details: BS ISO 17440:2014

Table 1 *(continued)*

Symbol	Description
σ_A	Stress amplitude in a stress cycle
σ_{Sd}	Design stress
σ_M	Basic fatigue strength amplitude, un-notched piece
σ_p	Total stress range in a pulsating stress cycle
σ_W	Fatigue strength amplitude, notched piece
σ_{Tmax}, σ_{T1}, σ_{T2}	Transformed stress amplitudes
$\Delta\sigma_c$	Characteristic fatigue strength
$\Delta\sigma_{Rd}$	Limit fatigue design stress
$\Delta\sigma_{Sd,i}$	Stress range in a lifting cycle i
$\Delta\sigma_{Sd,max}$	Maximum stress range

4 General requirements

4.1 Materials

The hook material in the finished product shall have sufficient ductility to avoid brittle fracture at the temperature range specified for the use of the hook. Hook material, after forging and heat treatment, shall have minimum elongation and Charpy-V impact toughness in accordance with Table 2.

Table 2 — Impact test and elongation requirements for hook material

Operation temperature	Impact test temperature	Minimum elongation, A_5	Minimum impact toughness, A_v
T ≥ - 10 °C	0 °C	15 %	35 J
T ≥ - 20 °C	– 10 °C		
– 30 °C > T ≥ – 40 °C	– 30 °C		
– 40 °C > T ≥ – 50 °C	– 40 °C		

To satisfy the requirements of the operating temperature, the manufacturer shall select an alloyed or non-alloyed steel, as appropriate, which after suitable heat treatment, shall be consistent with achieving the chosen mechanical property grade for the selected hook form, taking into account its individual ruling thickness.

The steel shall be produced by an electric process or by one of the oxygen processes.

The steel shall be fully killed, stabilized against strain age embrittlement and have an austenitic grain size of 6 or finer when tested in accordance with ISO 643. This shall accomplished, by ensuring that the steel contains sufficient aluminium (minimum 0,025 %) to permit the manufacture of hooks stabilized against strain-age-embrittlement during service.

The steel shall contain no more sulfur and phosphorus than the limits given in Table 3.

© ISO 2014 – All rights reserved

Documents
Document Sharing Hub
Full document details: BS ISO 17440:2014

Table 3 — Sulfur and phosphorus content

Element	Maximum mass content as determined by	
	Cast analysis %	Check analysis %
Sulfur (S)	0,020	0,025
Phosphorus (P)	0,020	0,025
Sum of S + P	0,035	0,045

The mechanical properties (*yield stress, ultimate strength*) are dependent upon the thickness of the forged hook body. As a ruling thickness, either the largest width of the hook seat or the diameter of the shank shall be used, whichever is greater

For standardization purposes, a classification of material grades for forged hooks is specified in Table 4. The values of mechanical properties given in Table 4 shall be used as design values and shall be guaranteed as minimum values by the hook manufacturer.

Table 4 — Material properties for classified material grades

Material class reference	Mechanical properties	
	Upper yield stress or 0,2 % proof stress f_y N/mm²	Ultimate strength f_u N/mm²
M	215	340
P	315	490
S	380	540
T	500	700
V	600	800
All materials selected shall fulfil the following requirement: $f_u/f_y \geq 1,2$		

4.2 Workmanship

The manufacturing process, factory tests and delivery conditions shall meet the requirements of ISO 9327-1.

Each hook body shall be forged hot in one piece. The macroscopic flow lines of the forging shall follow the body outline of the hook. Excess metal from the forging operation shall be removed cleanly leaving the surface free from sharp edges.

Profile cutting from a rolled plate is not permissible for forged hooks.

The surface roughness of the hook seat in the finished product shall be equal to or better than R_z 500 µm. Grinding may be used to reach the required surface quality. Any grinding marks shall be in a circumferential direction in respect to the seat circle.

After heat treatment, furnace scale shall be removed and the hook body shall be free from harmful defects, including cracks. Hook forging shall be inspected for defects using appropriate NDT-methods according to EN 10228-3. Requirements of quality class 1 of EN 10228-3: shall be met.

No welding shall be carried out at any stage of manufacture.

4.3 Manufacturing tolerances

The dimensional tolerances according to EN 10243-1 for forging grade F shall be fulfilled, except as modified herein.

© ISO 2014 – All rights reserved
Documents
Document Sharing Hub
Full document details: BS ISO 17440:2014

The seat circle diameter and the throat opening shall be within [0; +7 %] of the nominal dimension. The point height dimension a_3 shall be within [– 7 %; +7 %] of the nominal dimension.

The centre line of the machined shank shall not deviate from the seat centre more than ± 0,02 a_1.

The shape of the hook in its own plane shall be such that the centres of the material sections specified by the two flanks of a section shall fall between two parallel planes with a spacing of 0,05 d_1.

4.4 Heat treatment

Each forged hook shall either be hardened from a temperature above the AC_3 point and tempered, or normalized from a temperature above the AC_3 point. The tempering temperature shall be at least 475 °C.

The normalizing or tempering conditions shall be at least as effective as a temperature of 475 °C maintained for a period of 1 h.

4.5 Proof loading

As part of the manufacturing process, a hook may be proof loaded. This initial proof loading should be conducted at ambient room temperature and can further assist the Quality Assurance Management process as well as improve the fatigue performance of the hook in general. If proof loading is applied, the process of proof loading shall be as follows:

a) Proof loading shall be applied after the complete manufacturing process. (forging, heat treatment and machining)

b) The proof load force shall be applied between shank suspension nut and either:

   i) the base of the hook seat, for a straight line pull, parallel with the vertical axis of the shank, in the case of a single point hook.

   ii) two opposite contact points on the hook bowl surface consistent with a symmetrical 90 degree sling spread, and with load lines passing thro' the hook bowl centre(s), in the case of ramshorn hooks.

c) A relative permanent set due to proof loading measured at the gap opening shall not exceed 0,25 %; For batch-produced hooks the proof loading shall be applied to each and every hook in the batch;

d) The magnitude of the proof load ($F_{PL.}$) should reflect a 1,5f_y theoretical maximum tensile stress in the body fibres in section B for single point and section A for ramshorn hooks for the chosen material. The value of this proof load shall be determined as follows relative to either section A(ramshorn) or B(single point) as the case may be:

   Single point hook

$$F_{PL,sp} = \frac{1{,}5 f_y M_{hf.}}{1\ 000}$$

   Ramshorn hook

$$F_{PL.rh.} = \frac{1{,}5 f_y M_{hf.}}{1\ 000 v}$$

   where F_{PL} is expressed in kilonewtons (kN), f_y is the yield stress of the chosen material, and $M_{hf.}$ is a hook factor, i.e. for the hook intradoses of either section A or B, as the case may be, sample data are depicted within Annex C for individual hooks of their particular family.

$$v = 0{,}5x \tan\alpha$$

   for section A of ramshorn hooks, α = 45° (see 5.5.3)

© ISO 2014 – All rights reserved

Documents
Document Sharing Hub
Full document details: BS ISO 17440:2014

$M_{hf.}$ is derived from the formula

$$I \frac{(1-\eta_1 / R)}{(R\eta_1)}$$

All definitions are as per Annex H .

e) After proof loading, the hook shall be inspected for defects using appropriate NDT-methods and found free from harmful flaws, defects and cracks;

f) Proof loaded hook shall be stamped with symbol "PL" adjacent to the hook type marking.

g) The application of proof loading will affect (beneficially) subsequent fatigue performance of the hook. Calculation methodology of an example in Annex F can be used to quantify this effect.

Steels and in particular high strength steels for hooks due to be subjected to proof loading should be selected with due attention to the need of their adequate ductility.

NOTE 1 Additional benefits derived from the application of proof loading to the QA Management process is not addressed within this standard.

NOTE 2 The maximum stressed tensile fibres under F_{PL} will of course yield and a redistribution of stress will occur, resulting in a permanent compressive stress in this tensile area when the proof load is removed

4.6 Hook body geometry

Proportions of hook sections shall be such that stresses do not exceed stresses in the critical sections specified in 5.5.1.

The seat of a hook shall be of circular shape. In a single hook, the centre of curvature shall coincide with the centreline of the machined shank. In a ramshorn hook, the seat circle shall be tangential in respect to the outer edge of the forged shank.

A ramshorn hook shall be symmetrical with respect to the centre line of the shank.

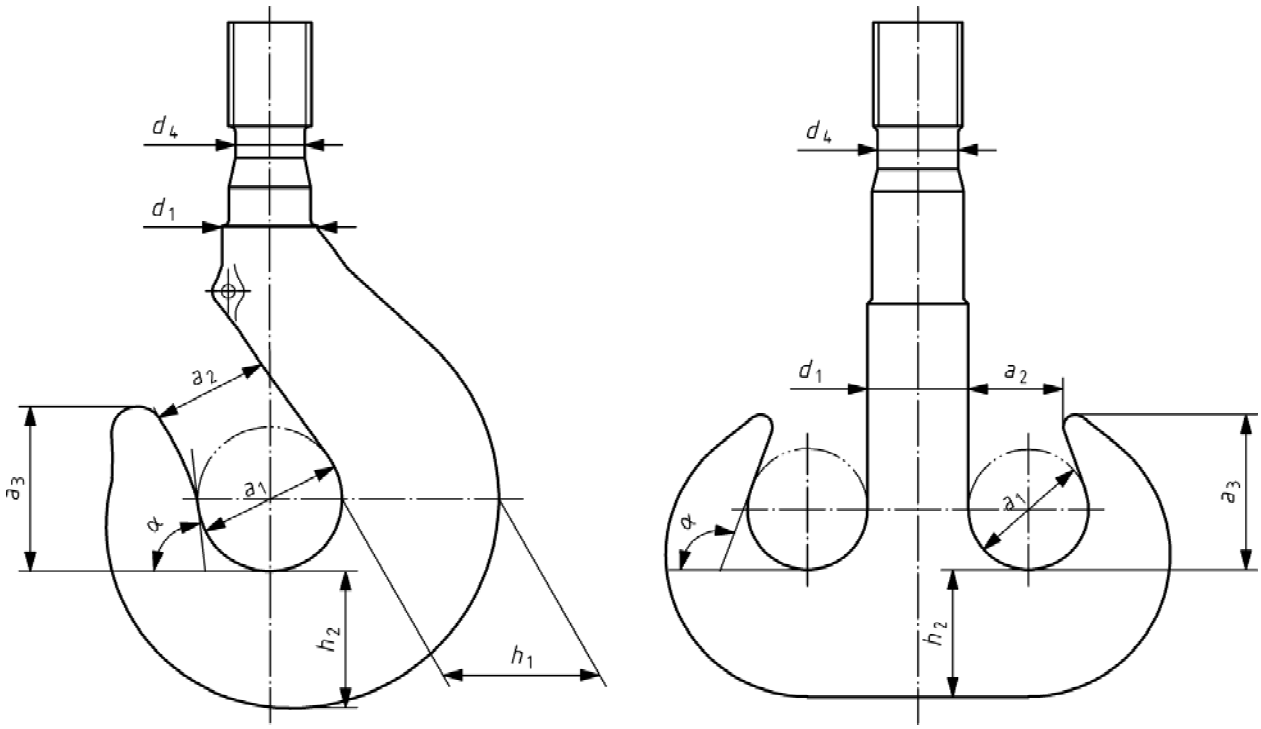

Figure 1 — Hook dimensions

© ISO 2014 – All rights reserved
Documents
Document Sharing Hub
Full document details: BS ISO 17440:2014

The diameter of the forged shank (d_1) shall be proportioned to circle diameter (a_1) as follows:

$$d_1 \geq 0{,}55\ a_1$$

The bifurcation point between the inner edge and the seat circle (a_1) shall be from the horizontal in minimum as follows: for a single hook $\alpha \geq 60°$, for a ramshorn hook $\alpha \geq 90°$

The full throat opening (a_2), without consideration to a latch shall be proportioned to the seat circle diameter as follows: $a_2 \leq 0{,}85\ a_1$. The effective throat opening with a latch shall be in minimum $a_0 \geq 0{,}7\ a_1$.

The point height of a hook (a_3) shall be in minimum as follows: $a_3 \geq a_1$.

Annexes A and B present example sets of hook body dimensions, which fulfil the requirements of this clause.

Other hook bodies differing from those shown within Annexes A and B can be technically assessed, either individually or as national groups to the requirements of this standard, provided dimensional characteristics shown within this clause and material requirements are fulfilled.

Furthermore, it is expected that other hook body sets in addition to those currently shown can and will be put forward for inclusion as national groups, within Annexes A and B. in the future.

4.7 Hook shank machining

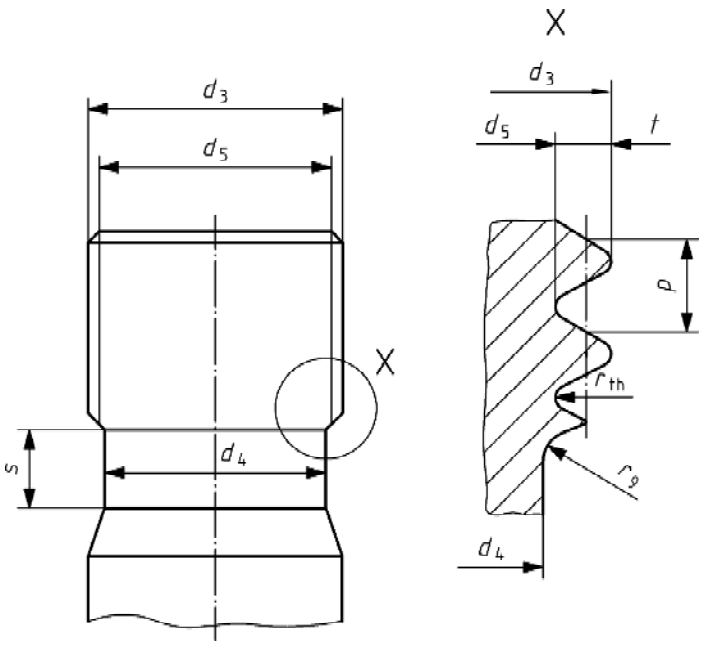

Figure 2 — Machined dimensions of shank

The length of the threaded portion of the shank shall be not less than $0{,}8d_3$.

© ISO 2014 – All rights reserved

Documents
Document Sharing Hub
Full document details: BS ISO 17440:2014

The pitch of the thread (p) shall be proportioned to the principal diameter of the thread (d_3) as follows:

$$0{,}055d_3 \leq p \leq 0{,}15d_3$$

The depth of the thread (t) shall be proportioned to the pitch of the thread (p) as follows:

$$0{,}45p \leq t \leq 0{,}61p$$

The bottom radius of the thread profile (r_{th}) shall be no less than 0,14p. A thread type, where the bottom radius is not specified, shall not be used.

The shank shall be undercut (with a diameter d_4) below the last threads for a length (s) proportioned to the undercut depth as follows: $s \geq 2\ (d_3 - d_4)$. The undercut shall reach deeper than the core diameter of the thread profile (d_5), in minimum as follows: $d_4 \leq (d_5 - 0{,}3\ \text{mm})$. The undercut shall be machined with a form ground tool to a surface finish of $R_a \leq 3{,}2\ \mu\text{m}$ and shall be free from machining marks and defects.

There shall be a relief radius in a transition from the threaded part to the undercut part. The relief radius (r_9) shall be proportioned to the diameter of the undercut (d_4) as follows: $r_9 \geq 0{,}06\ d_4$. The shape of the relief transition need not be a complete quadrant of a circle.

The thinnest section of the machined shank (consequently d_4) shall fulfil the condition $d_4 \geq 0{,}65d_1$, where d_1 is the diameter of the forged part of the shank, see Figure 1.

The whole machined section of the shank shall have a radius at each change in diameter. The machined section shall not reach the curved part of the forged body.

Screwed threads shall conform to the tolerance requirements of ISO 965-1 (coarse series) and be of medium fit class 6g.

NOTE Annex G presents example sets of machined shank and thread dimensions, which fulfil the geometric requirements. Other hook shank and thread designs differing from those shown within Annex G can be utilized and technically assessed to the requirements of this standard, provided dimensional parameters fulfil the requirements of this clause. Furthermore, it is expected that other hook shank and thread designs in addition to those currently shown can and will be put forward for inclusion as national groups within Annex G in the future.

4.8 Nut

The material grade of the nut shall be equal to that of the hook

The height of the nut shall be such that the threaded length of the hook shank is fully engaged with the nut thread.

The nut shall be positively locked to the shank against rotation to prevent the nut from unscrewing. The locking shall not interfere with the lower two thirds of the nut/shank thread connection. The locking shall allow relative axial movement between the shank and the nut due to play in the threaded connection. Alternatively, if the nut is locked by a dowel or other similar fixing media, it is essential during the locking process that the nut/shank load bearing thread flanks are in direct contact to ensure resultant unimpaired load transmission.

The nut shall rest on an anti-friction bearing, enabling the hook body to rotate about the vertical axis. The contact surface of the nut resting on the bearing shall meet the requirements as stipulated by the related bearing. The height position of the contact surface shall fall within the lower half of the thread connection.

Screwed threads of the nut shall comply with the tolerance requirements of ISO 965-1 (coarse series) and be of medium fit class 6H. The bottom radius of the thread profile for the nut shall be not less than 0,07 p, where p is the pitch of the thread. A thread type, where the bottom radius is not specified, shall not be used.

© ISO 2014 – All rights reserved
Documents
Document Sharing Hub
Full document details: BS ISO 17440:2014

4.9 Hook suspension

In general, and always for serially produced hook blocks, the hook suspension together with hoist rope reeving system shall be such that the system allows free tilting of the hook in any inclined direction of the load line. In cases where this articulation of the hook suspension is not provided, this shall be specially taken into consideration in the design calculations of the hook. In cases, where by changing the crane/hook block configuration or position the hook suspension can be brought to a rigid position, this shall be taken into account in the design calculation of the hook.

The same load actions as specified for the hook shall be taken into account in the design of the hook suspension.

5 Static strength

5.1 General

The proof of static strength for hooks shall be carried out in accordance with principles of ISO 8686-1. The general design limit for static strength is yielding of the material.

The proof shall be delivered for the specified critical sections of the hook, taking into account the most unfavourable load effects from the load combinations A, B or C in accordance with ISO 8686-1. The relevant partial safety factors γ_p shall be applied. The risk coefficients γ_n shall be applied when required in the specific application or as specified in the relevant European crane type standard.

5.2 Vertical design load

The vertical design force for a hook $F_{Sd,s}$ when hoisting the rated hook load, shall be calculated as follows:

$$F_{Sd,s} = \varphi \times m_{RC} \times g \times \gamma_p \times \gamma_n \tag{1}$$

$$\text{with } \varphi = \max\left\{\varphi_2; \left(1 + \varphi_5 \times \frac{a}{g}\right)\right\}$$

where

ϕ_2 is the dynamic factor, when hoisting an unrestrained grounded load, see ISO 8686-1

ϕ_5 is the dynamic factor for loads caused by hoist acceleration, see ISO 8686-1

a is the vertical acceleration or deceleration;

m_{RC} is the mass of the rated hook load;

g is the acceleration due to gravity, g = 9,81 m/s^2;

γ_p is the partial safety factor, see ISO 8686-1:

γ_p = 1,34 for regular loads (load combinations A);

γ_p = 1,22 for occasional loads (load combinations B);

γ_p = 1,10 for exceptional loads (load combinations C);

γ_n is the risk coefficient.

© ISO 2014 – All rights reserved

Documents
Document Sharing Hub
Full document details: BS ISO 17440:2014

Other load actions and combinations of ISO 8686-1 may produce vertical forces on the hook, whose load actions shall also be analysed. The vertical design force in such cases is expressed in a general format as follows:

$$F_{Sd,s} = F_H \times \gamma_p \times \gamma_n \quad (2)$$

where

F_H is a vertical force on hook due to other load action than hoisting a rated load; e.g. a test load or a peak load in an overload condition;

γ_p is the partial safety factor as above, see ISO 8686-1;

γ_n is the risk coefficient.

5.3 Horizontal design force

The Horizontal forces that are most significant for the strength of hooks are those caused by horizontal accelerations of the crane motions and these shall be taken into account. Other horizontal forces e.g. due to wind or sideways pull actions shall be taken into account, if significant. The horizontal force shall be assumed to act at the bottom of the hook seat.

The horizontal design force of hook $H_{Sd,s}$ due to horizontal accelerations shall be calculated as follows:

$$H_{Sd,s} = \min \begin{Bmatrix} m_{RC} \times a \times \varphi_5 \times \gamma_p \times \gamma_n \\ C_t \times F_{Sd,s} / h \end{Bmatrix} \quad (3)$$

where

m_{RC} is the mass of the rated hook load;

a is the acceleration or deceleration of a horizontal motion;

ϕ_5 is the dynamic factor for loads caused by horizontal acceleration, see ISO 8686-1. For hook suspensions, which are not rigidly connected in horizontal direction to the moving part of the crane, it shall be set $\phi_5 = 1$;

γ_p is the partial safety factor as for Formula (1);

γ_n is the risk coefficient;

C_t is the relative tilting resistance of the hook suspension in accordance with Annex I;

$F_{Sd,s}$ is the vertical design force in accordance with 5.2, related to the loading condition where $H_{Sd,s}$ is specified;

h is the vertical distance from the seat bottom of the hook body to the centre of the articulation.

5.4 Bending moment of the shank

5.4.1 General

The following load action shall be taken into consideration, when determining the total bending moment of the hook shank:

a) horizontal forces, see 5.4.2;

b) inclination of the hook suspension, see 5.4.3;

© ISO 2014 – All rights reserved
Documents
Document Sharing Hub
Full document details: BS ISO 17440:2014

c) eccentric action of vertical force in the hook seat, see 5.4.4;

a) ramshorn hook, half of the rated load on one prong, see 5.4.5.

The bending moments caused through these load actions shall be addressed to the same load combinations, which the primary loads or operational conditions causing the bending belong to.

5.4.2 Bending moment due to horizontal force

This clause covers the shank bending moment due to external horizontal forces. The moment M_1 shall be calculated at the critical hook shank section (see 5.6) due to the horizontal design force $H_{Sd,s}$.

$$M_1 = H_{Sd,s} \times h_s \tag{4}$$

where

$H_{Sd,s}$ is the horizontal design force in accordance with 5.3;

h_s is the vertical distance from the seat bottom of the hook body to the upper end of the thinnest part of the hook shank. Bending moment due to inclination of hook suspension.

Where the arrangement of the hoist mechanism or hook/hook block is such that the hook suspension may be brought to an inclined position in a loaded condition, the bending moment at the shank caused by this inclination shall be considered in the design calculations. Such an inclination may be caused e.g. by:

a) Differences in hoist travel distances between two separate hoist drives carrying a load beam with a hook, see Figure 3;

b) Tilting of a single rope reeving during hoisting/lowering motion, see Figure 4;

c) Tilting of a crane part, to which a hook is rigidly attached; or

d) Two-blocking of a bottom block in the uppermost hoist position with a crane part, after which this crane part is tilted.

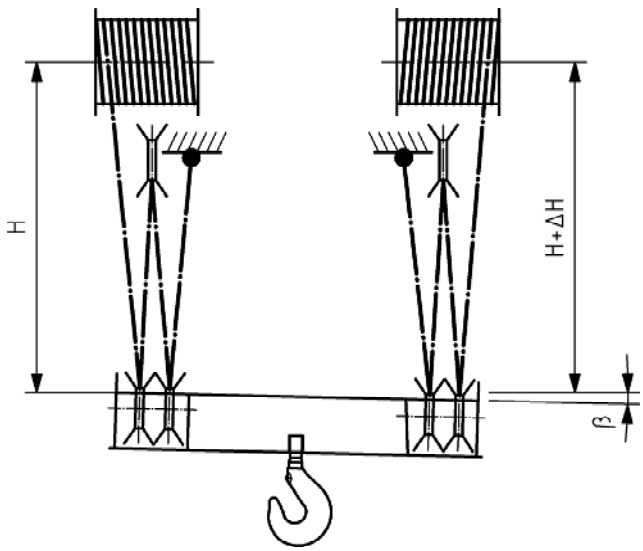

Figure 3 — Tilting of a hook in case of different hoist travel distances

Due to an inclination, the vertical force has a force component perpendicular to the axis of the hook shank. This force shall be taken into account in the same way as the horizontal forces. The bending

© ISO 2014 – All rights reserved

Documents
Document Sharing Hub
Full document details: BS ISO 17440:2014

moment M_2 caused at the critical hook shank section is proportional to the vertical design force as follows:

$$M_2 = F_{Sd,s} \times h_s \times \sin(\beta) \tag{5}$$

where

$F_{Sd,s}$ is the vertical design force in accordance with 5.2, related to the condition with a hook inclination β;

β is the maximum, total inclination in each relevant load combination;

h_s is the vertical distance from the seat bottom of the hook body to the upper end of the thinnest part of the hook shank.

In a rope balanced hook suspension with multiple rope falls and a single running rope coming from the drum, the hoisting/lowering movement causes the hook suspension to tilt, see Figure 4. The inclination is calculated as follows:

$$\beta = \arctan\left(C_t / h\right) \tag{6}$$

where

C_t is the relative tilting resistance of the hook suspension in accordance with Annex I;

h is the vertical distance from the seat bottom of the hook body to the centre of the articulation.

The maximum inclination, the related vertical force and the consequent moment M_2 shall be calculated separately for all relevant loading conditions of the crane.

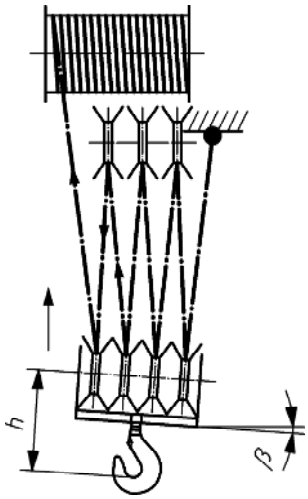

Figure 4 — Tilting of a hook suspension in a single rope reeving system

© ISO 2014 – All rights reserved
Documents
Document Sharing Hub
Full document details: BS ISO 17440:2014

5.4.3 Bending moment due to eccentricity of vertical force

A hoist load attachment may not always settle in the middle of the hook seat. The deviation of the vertical load action line from the centre line of the shank causes a bending moment, which shall be calculated as follows:

$$M_3 = c_e \times F_{Sd,s} \times a_1 \tag{7}$$

where

$F_{Sd,s}$ is the vertical design force in accordance with 5.2;

a_1 is the seat circle diameter of the hook body;

c_e is a coefficient for the eccentricity (c_e = 0,05).

NOTE A smaller eccentricity may be used in the design calculations, if a positive, mechanical means is provided ensuring that the hoist load attachment settles closer to the hook seat centre.

5.4.4 Special case for a ramshorn hook

As a special loading case for ramshorn hooks it shall be assumed, that half of the vertical force acts on one prong while the other prong is unloaded. This loading case is addressed in the calculations to the load combination C.

For a ramshorn hook with one-sided loading, the bending moment M_4 caused at the critical hook shank section shall be calculated as follows:

$$M_4 = F_{Sd,s}/2 \times \left[e_R \times (1 - h_s / h) + h_s / h \times \min \begin{Bmatrix} e_R \\ C_t \end{Bmatrix} \right] \tag{8}$$

with

$$e_R = (a_1 + d_1)/2$$

where

$F_{Sd,s}$ is the vertical design force in accordance with 5.2 and γ_p for load combination C;

d_1 is the diameter of the forged shank;

a_1 is the seat circle diameter of the hook;

e_R is the distance of the vertical load line from the centre line of the shank;

h is the vertical distance from the seat bottom of the hook body to the centre of the articulation;

h_s is the vertical distance from the seat bottom of the hook body to the upper end of the thinnest part of the hook shank;

C_t is the relative tilting resistance of the hook suspension, see Annex I.

© ISO 2014 – All rights reserved

Documents
Document Sharing Hub
Full document details: BS ISO 17440:2014

5.4.5 Design bending moment of the shank

In general, the design bending moment at the critical shank section $M_{Sd,s}$ for the loading conditions in accordance with 5.4.2 to 5.4.4 shall be calculated separately for each relevant load combination as follows:

$$M_{Sd,s} = \min \begin{Bmatrix} (M_1 + M_2 + M_3) \\ C_t \times F_{Sd,s} \end{Bmatrix} \tag{9}$$

where

M_1 *to* M_3 are the bending moments in accordance with 5.4.2 to 5.4.4;

C_t is the relative tilting resistance of the hook suspension, see Annex I;

$F_{Sd,s}$ is the vertical design force in accordance with 5.2.

Additional to the above, the design bending moment in accordance with the special case of 5.4.5 shall be taken into account in a load combination C as follows:

$$M_{Sd,s} = M_4 \tag{10}$$

where M_4 is the bending moment in accordance with 5.4.5.

5.5 Hook body, design stresses

5.5.1 Loadings

The vertical design force $F_{Sd,s}$ shall be divided into two force components, acting in the centre of the seat circle symmetrically on the opposite sides of the vertical centre line and in an angle α in respect to vertical, see Figure 5.

As a minimum value of α, it shall be assumed that α = 45°.

For ramshorn hooks, an equal load distribution shall be assumed between the two prongs in load combinations A and B.

As a special loading case, for ramshorn hooks it shall be assumed that half of the vertical force acts on one prong while the other prong is unloaded. This loading case is addressed in the calculations to the load combination C.

The horizontal forces shall be neglected in the hook body calculations.

© ISO 2014 – All rights reserved
Documents
Document Sharing Hub
Full document details: BS ISO 17440:2014

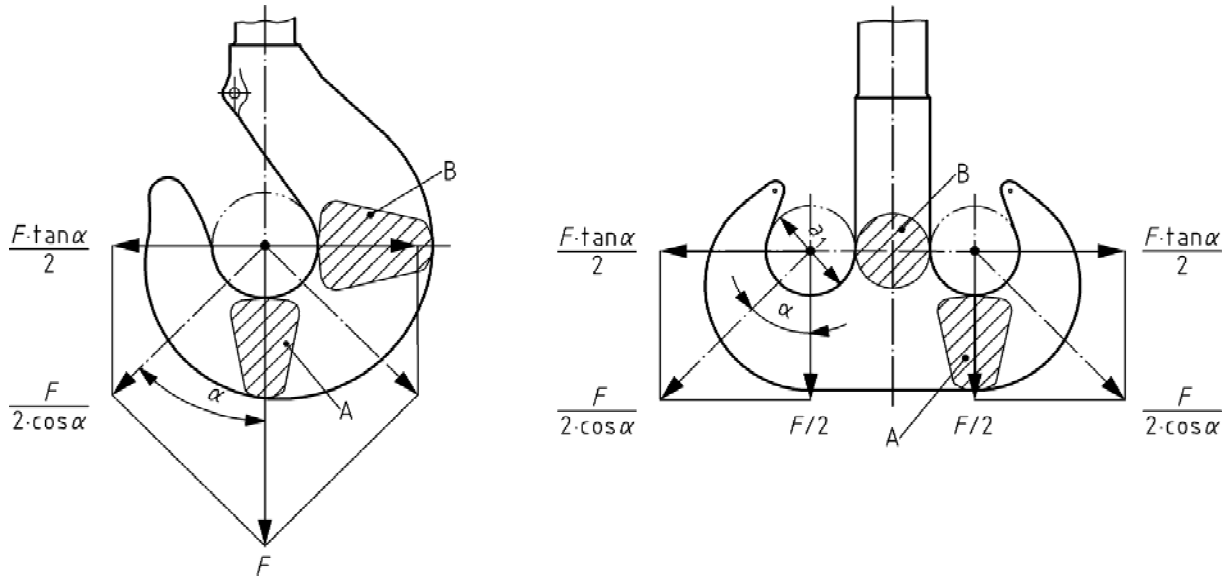

Figure 5 — Load actions on hook body and critical sections for calculation

5.5.2 Stress calculation methods

Stresses in the designated sections of a hook body shall be analysed either by the theory of curved beam bending in accordance with Annex H, by finite element methods or by full scale experiments. Stresses in section B of a ramshorn hook may, however be analysed by the conventional beam bending theory.

The following subclause is based upon the theory of curved beam bending.

5.5.3 Design stresses

The design stresses σ_{Sd} in sections A and B of single hooks and in the section A of ramshorn hooks shall be calculated as follows:

$$\sigma_{Sd,s} = \frac{v \times F_{Sd,s} \times R \times \eta_1}{I} \times \frac{1}{1 - \eta_1 / R} \tag{11}$$

with

$$R = a_1 / 2 + \eta_1$$

and

$v = 1$ for section B of single hooks;

$v = 0{,}5 \times \tan \alpha$ for section A of single and ramshorn hooks, $\alpha = 45°$;

© ISO 2014 – All rights reserved

Documents
Document Sharing Hub
Full document details: BS ISO 17440:2014

where

R is the hook curvature radius determined by the centroid of the section;

$F_{Sd,s}$ is the vertical design force in accordance with 5.2;

I is the reference moment of inertia for curved beam;

a_1 is the seat circle diameter of the hook;

η_1 is the absolute value of the coordinate y at inner edge of the particular section;

α is the angle of the load action lines in respect to vertical, see Figure 5.

The quantities η_1 and I are section specific values and shall be calculated in accordance with Annex H.

The design stress in section B of ramshorn hook for the special case of 5.4.5 shall be calculated as follows:

$$\sigma_{Sd,s} = \frac{F}{A_{d1}} + \frac{F \times (a_1 + d_1) \times d_1 / 4}{I_{d1}} \tag{12}$$

with

$$F = F_{Sd,s} / 2$$

where

$F_{Sd,s}$ is the vertical design force in accordance with 5.2 and γ_p for load combination C;

A_{d1} is the cross section area of the forged shank;

I_{d1} is the moment of inertia of the forged shank;

d_1 is the diameter of the forged shank;

a_1 is the seat circle diameter of the hook.

5.6 Hook shank, design stresses

The vertical design forces in accordance with 5.2 and the design bending moments in accordance with 5.4 shall be taken into account in the proof calculations of a hook shank. In general, the critical section of the shank is the undercut part immediately below the threaded section with a diameter d_4, see Figure 1. Maximum design stress $\sigma_{Sd,s}$ is calculated as a nominal stress without stress concentration factors and using conventional beam bending theory as follows:

$$\sigma_{Sd,s} = \frac{F_{Sd,s}}{A_{d4}} + \frac{M_{Sd,s} \times d_4 / 2}{I_{d4}} \tag{13}$$

where

$F_{Sd,s}$ is the vertical design hook force;

$M_{Sd,s}$ is the design bending moment in the critical section, see 5.4.5;

A_{d4} is the cross section area of the critical section of the hook shank;

I_{d4} is the moment of inertia of the critical section of the hook shank.

© ISO 2014 – All rights reserved
Documents
Document Sharing Hub
Full document details: BS ISO 17440:2014

5.7 Hook, proof of static strength

5.7.1 General for hook body and shank

Both for the hook body and the hook shank, it shall be proven for relevant load actions specified in 5.2 to 5.4 that

$$\sigma_{Sd,s} \leq f_{Rd} = f_1 \times \frac{f_y}{\gamma_m \times \gamma_{sm}} \tag{14}$$

where

$\sigma_{Sd,s}$ is the maximum design stress in accordance with 5.5 and 5.6 in the critical section;

f_{Rd} is the limit design stress;

f_y is the yield stress of the material in the finished product;

f_1 is the influence factor for the operation temperature;

γ_m is the general resistance coefficient in accordance with ISO 8686-1 (γ_m = 1,1);

γ_{sm} is the specific resistance coefficient for the section, as follows:

γ_{sm} = 0,75 for the hook body section B of single hooks, or

alternatively, if addressing a national standard particular hook form, γ_{sm} can be evaluated by superimposing Formula (14) characteristics within Formula (11) and applying that national standard's noted maximum rated capacity together with its nominated yield stress. Sample indications are contained within Annex C.

γ_{sm} = 0,90 for hook body section A of single point and ramshorn type hooks

γ_{sm} = 1,0 for all shank sections

In the absence of other data, the factor f_1 taking into consideration the reduction of the yield stress in high temperatures shall be calculated as follows:

For –50 °C ≤ T ≤ 100 °C:

$$f_1 = 1$$

For 100 °C < T ≤ 250 °C:

$$f_1 = 1 - 0{,}25 \times (T - 100)/150 \tag{15}$$

where T is the operation temperature in degrees Celsius (°C).

5.7.2 The use of static limit design force for verification of the hook body

The static limit design force $F_{Rd,s}$ covers the proof of static strength for sections A and B of single hooks and for section A of ramshorn hooks. It shall be calculated as follows:

$$F_{Rd,s} = \frac{f_y}{\gamma_m \times \gamma_{sm}} \times \frac{I \times (1 - \eta_1/R)}{v \times R \times \eta_1} \tag{16}$$

For a single hook the static limit design force is calculated separately for the two sections A and B and the smaller value of the two is used.

© ISO 2014 – All rights reserved

Documents
Document Sharing Hub
Full document details: BS ISO 17440:2014