BS ISO 17543-1:2020

BSI Standards Publication

Machine tools — Test conditions for universal spindle heads

Part 1: Accessory heads for machines with horizontal spindle (horizontal Z-axis)

Documents
Document Sharing Hub

Full document details: BS ISO 17543-1:2020

National foreword

This British Standard is the UK implementation of ISO 17543-1:2020.

The UK participation in its preparation was entrusted to Technical Committee MTE/1/2, Machine tools - Accuracy.

A list of organizations represented on this committee can be obtained on request to its secretary.

This publication does not purport to include all the necessary provisions of a contract. Users are responsible for its correct application.

© The British Standards Institution 2020
Published by BSI Standards Limited 2020

ISBN 978 0 580 98736 6

ICS 25.040.10; 25.040.20; 25.080.20

Compliance with a British Standard cannot confer immunity from legal obligations.

This British Standard was published under the authority of the Standards Policy and Strategy Committee on 30 April 2020.

Amendments/corrigenda issued since publication

Date	Text affected

Documents
Document Sharing Hub

Full document details: BS ISO 17543-1:2020

Contents

Page

Foreword ... **iv**
Introduction ... **v**
1 Scope ... **1**
2 Normative references ... **1**
3 Terms and definitions ... **2**
4 Preliminary remarks ... **6**
4.1 Measurement units ... 6
4.2 Reference to ISO 230 ... 6
4.3 Testing sequence ... 6
4.4 Tests to be performed ... 6
4.5 Measuring instruments ... 7
4.6 Software compensation ... 7
4.6.1 Head offset compensation ... 7
4.6.2 Machine geometric compensation ... 8
4.7 Diagrams ... 8
4.8 Measuring length ... 8
4.9 Tolerances ... 8
5 Common geometric tests for spindles of all types of heads ... **9**
6 Geometric tests for all types of spindle heads ... **11**
7 Angular positioning tests ... **27**
Annex A (informative) **Supplementary geometric tests for 45° split continuous heads** ... **28**
Annex B (informative) **Supplementary geometric tests for swivelling heads** ... **36**
Annex C (informative) **Tests for checking the accuracy of spindle axes of rotation** ... **46**
Bibliography ... **48**

© ISO 2020 – All rights reserved

Documents
Document Sharing Hub
Full document details: BS ISO 17543-1:2020

Foreword

ISO (the International Organization for Standardization) is a worldwide federation of national standards bodies (ISO member bodies). The work of preparing International Standards is normally carried out through ISO technical committees. Each member body interested in a subject for which a technical committee has been established has the right to be represented on that committee. International organizations, governmental and non-governmental, in liaison with ISO, also take part in the work. ISO collaborates closely with the International Electrotechnical Commission (IEC) on all matters of electrotechnical standardization.

The procedures used to develop this document and those intended for its further maintenance are described in the ISO/IEC Directives, Part 1. In particular, the different approval criteria needed for the different types of ISO documents should be noted. This document was drafted in accordance with the editorial rules of the ISO/IEC Directives, Part 2 (see www.iso.org/directives).

Attention is drawn to the possibility that some of the elements of this document may be the subject of patent rights. ISO shall not be held responsible for identifying any or all such patent rights. Details of any patent rights identified during the development of the document will be in the Introduction and/or on the ISO list of patent declarations received (see www.iso.org/patents).

Any trade name used in this document is information given for the convenience of users and does not constitute an endorsement.

For an explanation of the voluntary nature of standards, the meaning of ISO specific terms and expressions related to conformity assessment, as well as information about ISO's adherence to the World Trade Organization (WTO) principles in the Technical Barriers to Trade (TBT) see www.iso.org/iso/foreword.html.

This document was prepared by Technical Committee ISO/TC 39, *Machine tools,* Subcommittee SC 2, *Test conditions for metal cutting machine tools*.

Any feedback or questions on this document should be directed to the user's national standards body. A complete listing of these bodies can be found at www.iso.org/members.html.

© ISO 2020 – All rights reserved
Documents
Document Sharing Hub
Full document details: BS ISO 17543-1:2020

Introduction

Accessory spindle heads are used on machine tools such as milling and boring machines, machining centres, portal and gantry type machines, turning centres, with only one built-in spindle in the head or ram, providing fixed or indexing or tilting spindles which can be oriented in directions different from the built-in spindle axis.

In the same way as the built-in spindle, they can perform multiple machining operations including milling, boring, drilling, grinding and tapping, and, in some cases, automatic tool changing as well from a magazine or similar storage unit in accordance with a machining program.

Some types of heads allow to check only the resulting position of the spindle (as the fixed or indexing ones considered in 3.3, 3.4 and 3.5 and in tests G1 to G15), whereas for some others, i.e. those with continuous movement of the two rotary axes (as those considered in 3.6 and 3.7). Annexes A and B allow to make additional analysis of the relative positions between axes and to check the accuracy of their offset compensation as well.

© ISO 2020 – All rights reserved

Documents
Document Sharing Hub
Full document details: BS ISO 17543-1:2020

Documents
Document Sharing Hub

Full document details: BS ISO 17543-1:2020

Machine tools — Test conditions for universal spindle heads —

Part 1: Accessory heads for machines with horizontal spindle (horizontal Z-axis)

1 Scope

This document specifies, with reference to the ISO 230 series, some families of tests for accessory spindle heads used on machining centres or numerically controlled milling machines, etc., where applicable, with horizontal spindle (i.e. horizontal Z-axis). The tests considered in this document are also applicable to manual indexing heads.

This document establishes the tolerances or maximum acceptable values for the test results corresponding to general purpose and normal accuracy spindle heads used on different types of machines.

This document specifies several sets of procedures for geometric tests which can be carried out on different types of spindle heads for comparison, acceptance, maintenance, adjustments or any other purpose.

Grinding heads and facing heads are not included in the scope of this document.

This document deals only with the verification of geometric and positioning accuracy of the accessory spindle heads and does not apply to:

— the testing of the machine's head(s) operation (e.g. vibration, abnormal sound noise level, stick slip motion of components);

— the machine's spindle head(s) characteristics (e.g. speeds, feeds and accelerations) which are generally checked separately; or

— the verification of the machining capability under power.

Tests concerning the accuracy of finished test pieces are dealt with in other ISO standards.

2 Normative references

The following documents are referred to in the text in such a way that some or all of their content constitutes requirements of this document. For dated references, only the edition cited applies. For undated references, the latest edition of the referenced document (including any amendments) applies.

ISO 230-1:2012, *Test code for machine tools — Part 1: Geometric accuracy of machines operating under no-load or quasi-static conditions*

ISO 230-2:2014, *Test code for machine tools — Part 2: Determination of accuracy and repeatability of positioning of numerically controlled axes*

ISO 230-7:2015, *Test code for machine tools — Part 7: Geometric accuracy of axes of rotation*

© ISO 2020 – All rights reserved

Documents
Document Sharing Hub
Full document details: BS ISO 17543-1:2020

3 Terms and definitions

For the purposes of this document, the terms and definitions given in ISO 230-1, ISO 230-2, ISO 230-7 and the following apply.

ISO and IEC maintain terminological databases for use in standardization at the following addresses:

— ISO Online browsing platform: available at https://www.iso.org/obp

— IEC Electropedia: available at http://www.electropedia.org/

3.1
universal head
spindle head with one or more spindles which are oriented, or can be oriented, parallel to more than one coordinate axis

Note 1 to entry: Terminological entries 3.3 to 3.8 define several types of universal heads which are mostly used on horizontal machining centres or numerically controlled milling machines.

Note 2 to entry: Table 1 shows the five possible orientations of the spindle parallel to the coordinate axes and a short definition of the relevant direction.

Table 1 — Spindle orientations

Coordinate axis	Direction	Definition
Z	Negative	Longitudinal
X	Positive	Left
X	Negative	Right
Y	Positive	Upward
Y	Negative	Downward

3.2
accessory head
spindle head which can be mounted in front of a ram or a head already provided with its own tool holding spindle

Note 1 to entry: The machine tool can perform machining operations both by its own spindle or by an accessory head, and several different accessory heads can be stored in a head store.

Note 2 to entry: *Square head* (3.3) through *tilting head* (3.8) define several types of accessory heads which are mostly used on horizontal machining centres or numerically controlled milling machines.

3.3
square head
spindle head with only one spindle perpendicular to the Z-axis, which can rotate around the Z-axis

Note 1 to entry: See Figure 1.

© ISO 2020 – All rights reserved
Documents
Document Sharing Hub
Full document details: BS ISO 17543-1:2020

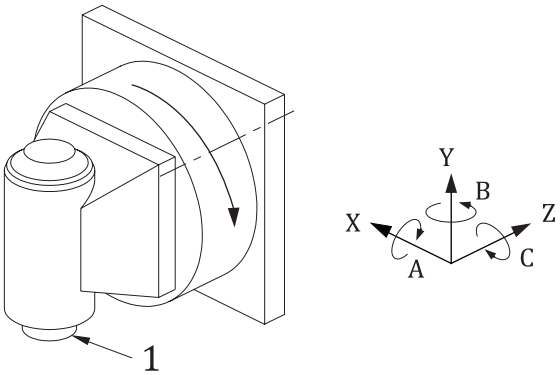

Key

1 spindle

Figure 1 — Square head

3.4
two-spindle square head
square head (3.3) with two spindles located perpendicular to each other, one parallel to the Z-axis and the other perpendicular to the Z-axis, which can rotate around the Z-axis

Note 1 to entry: The two spindles can be coplanar or skew to each other.

Note 2 to entry: See Figure 2.

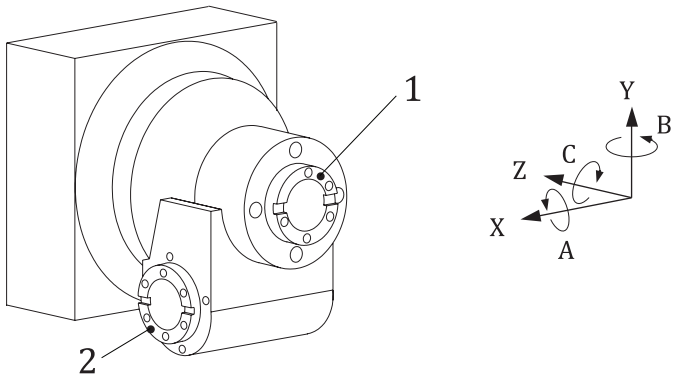

Key

1 longitudinal spindle

2 square spindle

Figure 2 — Two-spindle square head

3.5
45° split indexing head
spindle head with mechanical indexing function in a plane inclined by 45° with respect to the horizontal Z-axis

Note 1 to entry: See Figure 3.

© ISO 2020 – All rights reserved

Documents
Document Sharing Hub
Full document details: BS ISO 17543-1:2020

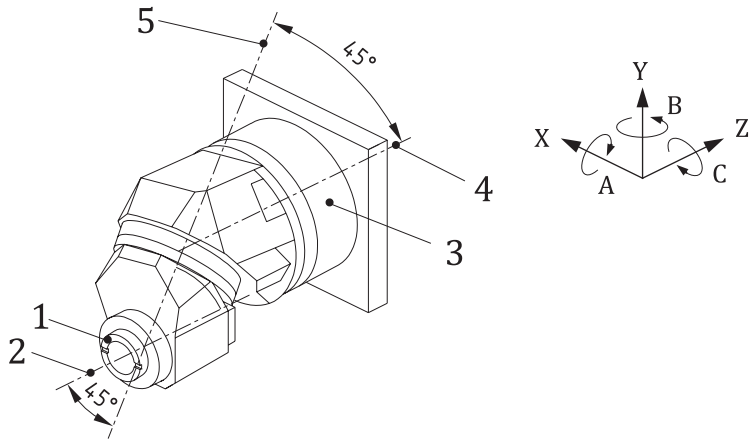

Key

1 spindle
2 spindle axis S
3 head base
4 C-axis (head base rotation)
5 rotary D-axis (45° oriented)

Figure 3 — 45° split head

3.6
45° split continuous head
spindle head provided with continuous positioning function by two numerically controlled axes of rotation, namely the C-axis parallel to the horizontal Z-axis, and the D-axis in a plane inclined by 45° with respect to the Z-axis

Note 1 to entry: Tests in Annex A check all the geometric features (planes and axes) which contribute to the resulting angular position of the spindle, by-passing the positioning deviations of the two rotary axes; these tests are also intended for a deeper investigation on the *45° split indexing heads* (3.5), if their movements and locks allow to do it.

Note 2 to entry: See Figure 3.

3.7
swivelling head
spindle head with two numerically controlled A-axis and C-axis perpendicular to each other

Note 1 to entry: The spindle axis S can be coplanar with C-axis (see Figure 4) or there can be a built-in offset between the spindle axis S and the C-axis. (see Figure 5).

Note 2 to entry: Tests in Annex B check all the relative positions between couples of axes, as A and C, spindle and A, spindle and C and their undesired offsets.

© ISO 2020 – All rights reserved
Documents
Document Sharing Hub
Full document details: BS ISO 17543-1:2020

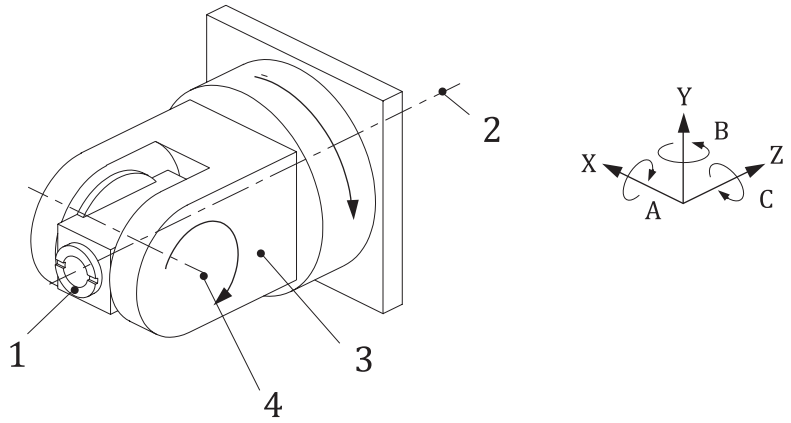

Key

1 spindle
2 C-axis (yoke rotation)
3 yoke body
4 A-axis (head rotation)

Figure 4 — Swivelling head

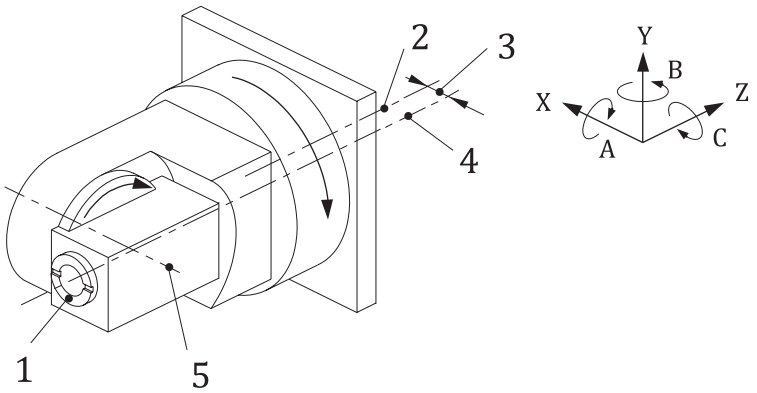

Key

1 spindle
2 C-axis (yoke rotation)
3 built-in offset
4 spindle axis S
5 A-axis (head rotation)

Figure 5 — Swivelling head with spindle offset

3.8
tilting head
spindle head rotating only around the X-axis

Note 1 to entry: See Figure 6.

© ISO 2020 – All rights reserved

Documents
Document Sharing Hub
Full document details: BS ISO 17543-1:2020

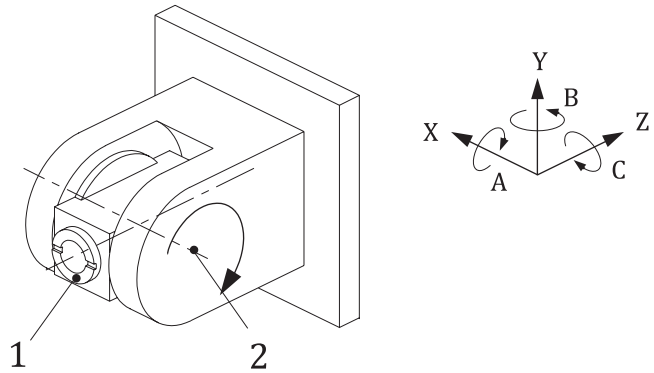

Key

1 spindle

2 A-axis

Figure 6 — Tilting head

4 Preliminary remarks

4.1 Measurement units

In this document, all linear dimensions, deviations and corresponding tolerances are expressed in millimetres, angular dimensions are expressed in degrees and angular deviations and the corresponding tolerances are expressed in ratios as the primary method, but in some cases, microradians or arcseconds may be used for clarification purposes. Formula (1) should be used for conversion of the units of angular deviations or tolerances.

$$0{,}010 / 1\,000 = 10\ \mu\text{rad} \cong 2'' \tag{1}$$

4.2 Reference to ISO 230

To apply this document, reference shall be made to ISO 230-1, ISO 230-2 and ISO 230-7 when required, especially for the installation of the machine before testing, warming up of the spindle and other moving components, description of measuring methods and recommended uncertainty of testing equipment.

Where the test concerned is in compliance with the specifications of the relevant part of ISO 230 (i.e. ISO 230-1, ISO 230-2 or ISO 230-7), a reference to the corresponding subclause of that standard is shown before the instructions in the “Observations” block of the tests described in Clauses 5, 6 and 7 and in Annexes A to C.

4.3 Testing sequence

The sequence in which the tests are presented in this document in no way defines the practical order of testing. In order to make the mounting of instruments or gauging easier, tests may be performed in any order.

4.4 Tests to be performed

When testing a machine, it is neither always necessary nor possible to carry out all the tests described in this document. When the tests are required for acceptance purposes, it is up to the user to choose, in agreement with the supplier/manufacturer, the relevant tests relating to the specific type of spindle head and/or the properties of the head. These tests are to be clearly stated when ordering either a machine with accessory head/(s) or a single head. A simple reference to this document for the acceptance

© ISO 2020 – All rights reserved
Documents
Document Sharing Hub
Full document details: BS ISO 17543-1:2020

tests, without specifying the tests to be carried out, and without agreement on the relevant expenses, cannot be considered as binding for any contracting party.

Tests shown in this document check only the resulting position of the spindle axis in the possible orientations of the head, and they are intended to be used for acceptance purposes.

Annexes A and B contain additional tests to check all the geometric features (planes and axes) which contribute to the resulting position of the spindle, by-passing the positioning deviations of the two rotary axes; these tests provide a technical means for a deeper investigation and a diagnostic analysis on the accuracy of the head components and of their assembly, both on a new head and during the working life of a head in use.

Annex C contains tests for checking the accuracy of axes of rotation.

4.5 Measuring instruments

Measuring instruments indicated in the tests described in Clauses 5, 6, 7 and in Annexes A to C are only examples. Other instruments capable of measuring the same quantities and having the same, or a smaller, measurement uncertainty may be used. Reference shall be made to ISO 230-1:2012, Clause 5, which indicates the relationship between measurement uncertainties and the tolerances.

When a dial gauge is referred to, it can mean not only dial test indicators (DTIs), but any type of linear displacement sensor such as analogue or digital dial gauges, linear variable differential transformers (LVDTs), linear scale displacement gauges or noncontacting sensors, when applicable to the test concerned (see ISO 230-1:2012, Clause 4).

Similarly, when a straightedge is referred to, it can mean any type of straightness reference artefact, such as a granite, ceramic, steel, cast iron straightedge, one arm of a square, one generating line on a cylindrical square, any straight path on a reference cube or a special, dedicated artefact manufactured to fit in the T-slots or other references.

In the same way, when a square is mentioned, it can mean any type of squareness reference artefact, such as a granite or ceramic or steel or cast iron square, a cylindrical square, a reference cube or, again, a special, dedicated artefact.

Valuable information for measuring instruments is available in ISO/TR 230-11.

4.6 Software compensation

4.6.1 Head offset compensation

The NC control can compensate offsets between axes, which can result from either of the following:

— the head design: e.g. in two-spindle square heads with rigid body the cross-spindle can lie in a different plane from the longitudinal spindle (see Figure 2) or in swivelling heads with the A-axis perpendicular to the C-axis the spindle axis S can swivel in a plane not containing the C-axis (see Figure 5);

— the natural small inaccuracies in machining and assembling the head components (see Figure 3 and Figure 4).

In this second case, the concerned tests may be carried out with and/or without applying the offset compensation, according to the test purpose, and this should be specified in the test report for every concerned test.

This double option of test allows assessing both the original mechanical accuracy and the offset compensation accuracy. The intended use of the machine tool shall be considered.

© ISO 2020 – All rights reserved

Documents
Document Sharing Hub
Full document details: BS ISO 17543-1:2020

4.6.2 Machine geometric compensation

When software facilities are available for compensating certain geometric deviations of the machine, the tests considered in this document should be carried out with these compensations. When the software compensation is used, this shall be stated in the test report. It shall be noted that when software compensation is used, axes cannot be locked for test purposes.

4.7 Diagrams

For reasons of simplicity, the diagrams in this document illustrate only some types of spindle heads and machine configurations. Their main purpose is to show the movements to be operated and the orientation of the coordinate axes.

4.8 Measuring length

When a test requires the use of a test mandrel, the measuring length is 250 mm for the usual test mandrels 300 mm long. If a different measuring length is required, test mandrels of adequate length shall be provided accordingly.

4.9 Tolerances

In this document, all tolerance values (see ISO 230-1:2012, 4.1) are guidelines. When they are used for acceptance purposes, other values may be agreed between the user and the manufacturer/supplier. The required/agreed tolerance values are to be clearly stated when ordering the machine.

When establishing the tolerance for a measuring length different from that given in this document (see ISO 230-1:2012, 4.1.2), it shall be taken into consideration that the minimum value of tolerance is 0,005 mm.

© ISO 2020 – All rights reserved
Documents
Document Sharing Hub
Full document details: BS ISO 17543-1:2020

5 Common geometric tests for spindles of all types of heads

Object	**G1**
Checking of axial error motion of the spindle.	
Diagram 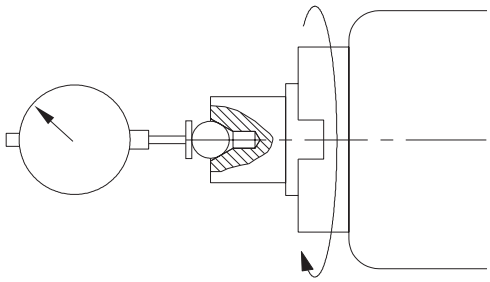	
Tolerance 0,005	**Measured deviation**
Measuring instruments Dial gauge and precision sphere with special fixture.	
Observations and references to ISO 230-1:2012, 9.1 (see also ISO 230-7) This test shall be performed on all working spindles. NOTE See also test CR1 in Annex C.	

© ISO 2020 – All rights reserved

Documents
Document Sharing Hub
Full document details: BS ISO 17543-1:2020

Object	**G2**
Checking of run-out of internal taper of the spindle: a) as close as possible to the spindle nose; b) at a distance of 250 mm from the first measuring position in a).	
Diagram	
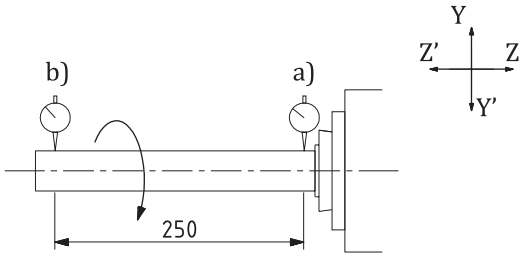	
Tolerance a) 0,010 b) 0,020	**Measured deviation** a) b)
Measuring instruments Test mandrel and dial gauge.	
Observations and references to ISO 230-1:2012, 12.5.3 This test shall be performed on all working spindles. NOTE See also test CR1 in Annex C.	

© ISO 2020 – All rights reserved
Documents
Document Sharing Hub
Full document details: BS ISO 17543-1:2020