BS ISO 17907:2014

BSI Standards Publication

Ships and marine technology — Single point mooring arrangements for conventional tankers

bsi.

...making excellence a habit.™

Document Sharing Hub

National foreword

This British Standard is the UK implementation of ISO 17907:2014.

The UK participation in its preparation was entrusted to Technical Committee SME/32/-/4, Ships and marine technology - Outfitting and deck machinery.

A list of organizations represented on this committee can be obtained on request to its secretary.

This publication does not purport to include all the necessary provisions of a contract. Users are responsible for its correct application.

© The British Standards Institution 2014. Published by BSI Standards Limited 2014

ISBN 978 0 580 84559 8

ICS 47.020.01

Compliance with a British Standard cannot confer immunity from legal obligations.

This British Standard was published under the authority of the Standards Policy and Strategy Committee on 31 December 2014.

Amendments issued since publication

Date	Text affected

Documents
Document Sharing Hub

Full document details: BS ISO 17907:2014

INTERNATIONAL STANDARD

ISO 17907

First edition
2014-11-01

Ships and marine technology — Single point mooring arrangements for conventional tankers

Navires et technologie marine — Emplacements pour point d'amarrage unique pour les navires-citernes conventionnels

Reference number
ISO 17907:2014(E)

Documents
Document Sharing Hub

© ISO 2014

Full document details: BS ISO 17907:2014

COPYRIGHT PROTECTED DOCUMENT

© ISO 2014

All rights reserved. Unless otherwise specified, no part of this publication may be reproduced or utilized otherwise in any form or by any means, electronic or mechanical, including photocopying, or posting on the internet or an intranet, without prior written permission. Permission can be requested from either ISO at the address below or ISO's member body in the country of the requester.

ISO copyright office
Case postale 56 • CH-1211 Geneva 20
Tel. + 41 22 749 01 11
Fax + 41 22 749 09 47
E-mail copyright@iso.org
Web www.iso.org

Published in Switzerland

© ISO 2014 – All rights reserved

Documents
Document Sharing Hub

Full document details: BS ISO 17907:2014

Contents

Page

Foreword ..... **iv**

1 Scope **1**

2 Technical requirements **1**
2.1 Design arrangement of SPM arrangements for tankers 1
2.2 Configuration and design manufacturing requirements for SPM arrangements for tankers 3

3 Test method **4**
3.1 Bow chain stoppers 4
3.2 Bow fairleads 5
3.3 Pedestal rollers 6

4 Markings **7**

Annex A (informative) **Types and dimensions of chain stoppers** **8**

Annex B (informative) **Types and dimensions of fairleads** **11**

Annex C (informative) **Types and dimensions of pedestal rollers** **12**

© ISO 2014 – All rights reserved

Documents
Document Sharing Hub
Full document details: BS ISO 17907:2014

Foreword

ISO (the International Organization for Standardization) is a worldwide federation of national standards bodies (ISO member bodies). The work of preparing International Standards is normally carried out through ISO technical committees. Each member body interested in a subject for which a technical committee has been established has the right to be represented on that committee. International organizations, governmental and non-governmental, in liaison with ISO, also take part in the work. ISO collaborates closely with the International Electrotechnical Commission (IEC) on all matters of electrotechnical standardization.

The procedures used to develop this document and those intended for its further maintenance are described in the ISO/IEC Directives, Part 1. In particular the different approval criteria needed for the different types of ISO documents should be noted. This document was drafted in accordance with the editorial rules of the ISO/IEC Directives, Part 2 (see www.iso.org/directives).

Attention is drawn to the possibility that some of the elements of this document may be the subject of patent rights. ISO shall not be held responsible for identifying any or all such patent rights. Details of any patent rights identified during the development of the document will be in the Introduction and/or on the ISO list of patent declarations received (see www.iso.org/patents).

Any trade name used in this document is information given for the convenience of users and does not constitute an endorsement.

For an explanation on the meaning of ISO specific terms and expressions related to conformity assessment, as well as information about ISO's adherence to the WTO principles in the Technical Barriers to Trade (TBT) see the following URL: Foreword - Supplementary information

The committee responsible for this document ISO/TC 8, *Ships and marine technology*, Subcommittee SC 4, *Outfitting and deck machinery*.

© ISO 2014 – All rights reserved
Documents
Document Sharing Hub
Full document details: BS ISO 17907:2014

Ships and marine technology — Single point mooring arrangements for conventional tankers

1 Scope

This International Standard specifies the technical requirements and test methods for the equipment necessary for the ships intended to use single point mooring (hereinafter referred to as "SPM") arrangements, such as bow chain stoppers, bow fairleads, and pedestal rollers.

This International Standard is applicable to the SPM arrangements provided for tankers, gas carriers, and chemical vessels.

2 Technical requirements

2.1 Design arrangement of SPM arrangements for tankers

The general design arrangement is given in Figure 1 and Figure 2.

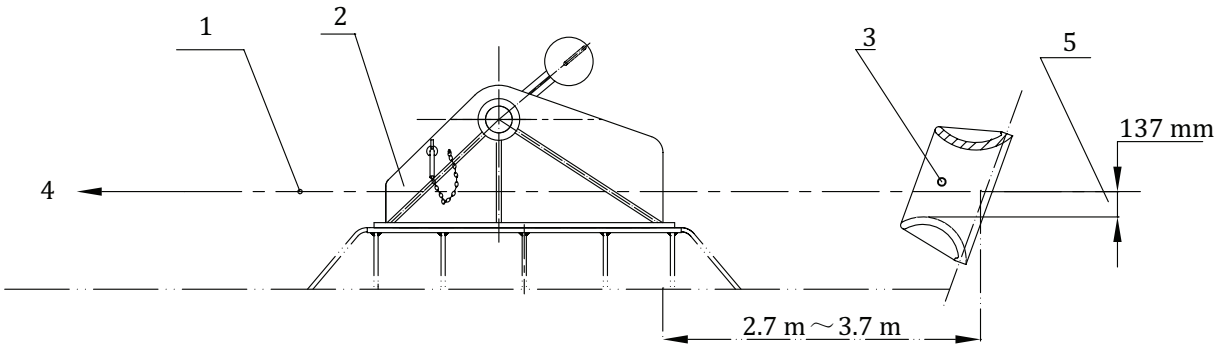

Key

1 centreline of chain parallel to deck
2 bow chain stopper
3 bow fairlead
4 to pedestal roller or direct to winch storage drum
5 half breadth of chain

Figure 1 — General arrangement of SPM arrangements for tankers

© ISO 2014 – All rights reserved

Documents
Document Sharing Hub
Full document details: BS ISO 17907:2014