BS ISO 17942:2014

BSI Standards Publication

Fine ceramics (advanced ceramics, advanced technical ceramics) — Methods for chemical analysis of boron nitride powders

bsi.

...making excellence a habit.™

Document Sharing Hub

National foreword

This British Standard is the UK implementation of ISO 17942:2014.

The UK participation in its preparation was entrusted to Technical Committee RPI/13, Advanced technical ceramics.

A list of organizations represented on this committee can be obtained on request to its secretary.

This publication does not purport to include all the necessary provisions of a contract. Users are responsible for its correct application.

© The British Standards Institution 2014. Published by BSI Standards Limited 2014

ISBN 978 0 580 78551 1

ICS 81.060.30

Compliance with a British Standard cannot confer immunity from legal obligations.

This British Standard was published under the authority of the Standards Policy and Strategy Committee on 31 August 2014.

Amendments issued since publication

Date	Text affected

Documents
Document Sharing Hub

Full document details: BS ISO 17942:2014

INTERNATIONAL STANDARD

ISO 17942

First edition
2014-08-15

Fine ceramics (advanced ceramics, advanced technical ceramics) — Methods for chemical analysis of boron nitride powders

Céramiques techniques — Méthodes pour l'analyse chimique de poudres de nitrure de bore

Reference number
ISO 17942:2014(E)

Documents
Document Sharing Hub

© ISO 2014

Full document details: BS ISO 17942:2014

COPYRIGHT PROTECTED DOCUMENT

© ISO 2014

All rights reserved. Unless otherwise specified, no part of this publication may be reproduced or utilized otherwise in any form or by any means, electronic or mechanical, including photocopying, or posting on the internet or an intranet, without prior written permission. Permission can be requested from either ISO at the address below or ISO's member body in the country of the requester.

ISO copyright office
Case postale 56 • CH-1211 Geneva 20
Tel. + 41 22 749 01 11
Fax + 41 22 749 09 47
E-mail copyright@iso.org
Web www.iso.org

Published in Switzerland

© ISO 2014 – All rights reserved

Documents
Document Sharing Hub

Full document details: BS ISO 17942:2014

Contents

Page

Foreword ..... **v**
Introduction ..... **vi**
1 Scope **1**
2 Normative references **1**
3 General rules in chemical analysis **1**
4 Analysis items **1**
5 Sampling, weighing, and drying of sample **2**
5.1 Sampling 2
5.2 Weighing 2
5.3 Drying 2
6 Reporting analytical values **3**
6.1 Number of analyses 3
6.2 Blank test 3
6.3 Evaluation of analytical values 3
6.4 Expression of analytical values 3
7 Determination methods of total boron **3**
7.1 Classification of determination methods 3
7.2 Fusion-acidimetric titration method 4
7.3 Fusion-ICP-OES 6
8 Determination methods of free boron **8**
8.1 Classification of determination methods 8
8.2 Sulfuric acid digestion-ICP-OES and spectrophotometry 9
8.3 Nitric acid digestion-ICP-OES 11
8.4 Methanol extraction-borate separation-ICP-OES and spectrophotometry 12
9 Determination methods of total nitrogen **16**
9.1 Classification of determination methods 16
9.2 Acid pressure decomposition-distillation separation-acidimetric titration method 17
9.3 Fusion-ammonia separation-acidimetric titration method 22
9.4 Inert gas fusion-thermal conductivity method 22
10 Determination method of silicon **26**
10.1 Determination method 26
10.2 Principle 26
10.3 Reagents 26
10.4 Apparatus and instrument 27
10.5 Amount of sample 27
10.6 Operation 27
10.7 Blank test 27
10.8 Drawing calibration curves 27
10.9 Calculation 28
11 Determination methods of aluminium, cadmium, calcium, chromium, cobalt, copper, iron, lead, magnesium, manganese, nickel, titanium, vanadium, and zinc **28**
11.1 Classification of determination methods 28
11.2 Acid pressure decomposition-ICP-OES 28
11.3 Fusion-ICP-OES 31
12 Determination methods of sodium and potassium **34**
12.1 Classification of determination methods 34
12.2 Acid pressure decomposition-AAS 35
12.3 Acid pressure decomposition-FES 37
12.4 Acid pressure decomposition-ICP-OES 39

AVA Documents
Document Sharing Hub

© ISO 2014 – All rights reserved

Full document details: BS ISO 17942:2014

13 Determination methods of carbon **41**
13.1 Classification of determination methods 41
13.2 Combustion (resistance furnace)-IR absorption spectrometry 42
13.3 Combustion (RF furnace)-conductometry 45
13.4 Combustion (RF furnace)-IR absorption spectrometry 47
13.5 Combustion (resistance furnace)-coulometry 49
13.6 Combustion (resistance furnace)-gravimetry 49
13.7 Combustion (resistance furnace)-conductometry 49
14 Determination method of Oxygen **49**
14.1 Determination method 49
14.2 Inert gas fusion-IR absorption spectrometry 49
15 Test report **52**
Annex A (informative) **List of commercial certified reference materials** **53**
Annex B (informative) **Analytical results obtained from a round robin test** **54**
Annex C (informative) **Spectral lines for ICP-OES** **58**
Bibliography **59**

© ISO 2014 – All rights reserved
Documents
Document Sharing Hub
Full document details: BS ISO 17942:2014

Foreword

ISO (the International Organization for Standardization) is a worldwide federation of national standards bodies (ISO member bodies). The work of preparing International Standards is normally carried out through ISO technical committees. Each member body interested in a subject for which a technical committee has been established has the right to be represented on that committee. International organizations, governmental and non-governmental, in liaison with ISO, also take part in the work. ISO collaborates closely with the International Electrotechnical Commission (IEC) on all matters of electrotechnical standardization.

The procedures used to develop this document and those intended for its further maintenance are described in the ISO/IEC Directives, Part 1. In particular the different approval criteria needed for the different types of ISO documents should be noted. This document was drafted in accordance with the editorial rules of the ISO/IEC Directives, Part 2 (see www.iso.org/directives).

Attention is drawn to the possibility that some of the elements of this document may be the subject of patent rights. ISO shall not be held responsible for identifying any or all such patent rights. Details of any patent rights identified during the development of the document will be in the Introduction and/or on the ISO list of patent declarations received (see www.iso.org/patents).

Any trade name used in this document is information given for the convenience of users and does not constitute an endorsement.

For an explanation on the meaning of ISO specific terms and expressions related to conformity assessment, as well as information about ISO's adherence to the WTO principles in the Technical Barriers to Trade (TBT) see the following URL: Foreword - Supplementary information.

The committee responsible for this document is ISO/TC 206, *Fine ceramics*.

© ISO 2014 – All rights reserved

Documents
Document Sharing Hub
Full document details: BS ISO 17942:2014

Introduction

This International Standard describes the chemical analysis of boron nitride powders for use in fine ceramics applications. Determination methods of both main and trace constituents of interest are fully covered.

© ISO 2014 – All rights reserved
Documents
Document Sharing Hub
Full document details: BS ISO 17942:2014

INTERNATIONAL STANDARD ISO 17942:2014(E)

Fine ceramics (advanced ceramics, advanced technical ceramics) — Methods for chemical analysis of boron nitride powders

1 Scope

This International Standard specifies the methods for the chemical analysis of fine boron nitride powders used as the raw material for fine ceramics.

This International Standard stipulates the analysis methods of total boron, free boron, total nitrogen, aluminium, cadmium, calcium, chromium, cobalt, copper, iron, lead, magnesium, manganese, nickel, potassium, silicon, sodium, titanium, vanadium, zinc, carbon, and oxygen in boron nitride powders for fine ceramics. Total boron is determined by using either a fusion–titration method or a fusion–inductively coupled plasma-optical emission spectrometry (ICP-OES). Free boron is determined by using either an acid digestion–ICP-OES or a methanol extraction–ICP-OES. If necessary, the boron amount which arises from the hydrolysis of boron nitride during sample treatment is corrected using spectrophotometry. Total nitrogen is determined by using either an acid pressure decomposition–distillation separation–titration method or an inert gas fusion–thermal conductivity method. Silicon is determined by using a fusion–ICP-OES. Aluminium, cadmium, calcium, chromium, cobalt, copper, iron, lead, magnesium, manganese, nickel, titanium, vanadium, zinc are determined by using an acid pressure decomposition–ICP-OES or a fusion–ICP-OES. Sodium and potassium are determined by using atomic absorption spectrometry (AAS), flame emission spectrometry (FES), or ICP-OES following acid pressure decomposition. Carbon is determined by using a combustion–IR absorption spectrometry or a combustion–thermal conductivity method. Oxygen is determined by using an inert gas fusion–IR absorption spectrometry.

2 Normative references

The following documents, in whole or in part, are normatively referenced in this document and are indispensable for its application. For dated references, only the edition cited applies. For undated references, the latest edition of the referenced document (including any amendments) applies.

EN 12698-1:2007, *Chemical analysis of nitride bonded silicon carbide refractories - Part 1: Chemical methods*

ISO 3696, *Water for analytical laboratory use — Specification and test methods*

ISO 6353-3, *Reagents for chemical analysis — Part 3: Specifications — Second series*

ISO 9138, *Abrasive grains — Sampling and splitting*

ISO 21068-2:2008, *Chemical analysis of silicon-carbide-containing raw materials and refractory products — Part 2: Determination of loss on ignition, total carbon, free carbon and silicon carbide, total and free silica and total and free silicon*

3 General rules in chemical analysis

Chemical analysis shall be performed in accordance with general rules regulated as standards, if available.

4 Analysis items

Analysis items specified in this International Standard shall be as follows:

a) Total boron (T.B)

© ISO 2014 – All rights reserved

Documents
Document Sharing Hub
Full document details: BS ISO 17942:2014

b) Free boron (F.B)

c) Total nitrogen (T.N)

d) Silicon (Si)

e) Aluminium (Al)

f) Cadmium (Cd)

g) Calcium (Ca)

h) Chromium (Cr)

i) Cobalt (Co)

j) Copper (Cu)

k) Iron (Fe)

l) Lead (Pb)

m) Magnesium (Mg)

n) Manganese (Mn)

o) Nickel (Ni)

p) Titanium (Ti)

q) Vanadium (V)

r) Zinc (Zn)

s) Sodium (Na)

t) Potassium (K)

u) Carbon (C)

v) Oxygen (O)

5 Sampling, weighing, and drying of sample

The method of preparing samples shall be in accordance with ISO 9138 unless otherwise mutually agreed upon between the analyser and customer.

5.1 Sampling

Take the sample in accordance with ISO 9138.

5.2 Weighing

Weigh the sample of the required quantity to the nearest 0,1 mg using an electric balance.

5.3 Drying

Take about 10 g of the sample into a flat-type weighing bottle (60 mm × 30 mm) and spread it uniformly over the bottom of the bottle. Place the bottle in an air bath at (120 ± 5) °C for 2 h without a lid, and then cool in a desiccator (desiccant: magnesium perchlorate for drying) with a lid for 1 h.

© ISO 2014 – All rights reserved
Documents
Document Sharing Hub
Full document details: BS ISO 17942:2014

6 Reporting analytical values

6.1 Number of analyses

Analyse the sample twice on different days.

6.2 Blank test

Upon analysis, perform a blank test to correct the measured values.

6.3 Evaluation of analytical values

a) When the difference between two analytical values does not exceed the tolerance shown in Table 1, the average value shall be reported.

b) When the difference between two analytical values exceeds the tolerance shown in Table 1, perform additional two analyses. When the difference does not exceed the tolerance, the average value thereof shall be reported. If the difference also exceeds the tolerance, the median of four analytical values shall be reported.

6.4 Expression of analytical values

The analytical values shall be given in % (mass fraction) in dryness.

a) **Total boron and total nitrogen** — express the results with two to four figures according to the method used.

b) **Free boron** — express the results with two to four figures according to the method used.

c) **Others** — express the results to the third decimal place.

Table 1 — Tolerance on analytical values

Unit: % (mass fraction)

Component	total-B	free-B	total-N	Si, Al, Cd, Ca, Cr, Co, Cu, Fe, Pb, Mg, Mn, Ni, Ti, V, Zn, K, Na	C	O
Tolerance	0,30		0,30[a] 0,40[b]	0,001[c] 0,005[d]	0.005	0,01[e] 0,05[f]

[a] Acid pressure decomposition–distillation separation–acidimetric titration method.

[b] Inert gas fusion–thermal conductivity method.

[c] Applicable to the content of less than 0,01 % (mass fraction).

[d] Applicable to the content of not less than 0,01 % (mass fraction).

[e] Applicable to the content of less than 1,0 % (mass fraction).

[f] Applicable to the content of not less than 1,0 % (mass fraction).

7 Determination methods of total boron

7.1 Classification of determination methods

Total boron shall be determined by either of the following methods. If analytical results with three or four figures are required, use method A; whereas if two figures are required, method B can be used.

— Method A, fusion–acidimetric titration method

© ISO 2014 – All rights reserved

Documents
Document Sharing Hub
Full document details: BS ISO 17942:2014

— Method B, fusion–ICP-OES

7.2 Fusion-acidimetric titration method

7.2.1 Principle

Fuse the sample with sodium carbonate and dissolve the melt in hydrochloric acid. Adjust the solution to pH 6,4 after removal of carbon dioxide. Add mannitol, and then titrate with sodium hydroxide solution to pH 6,4.

This method shall be used to obtain the results of three or four figures.

7.2.2 Reagents

Reagents of analytical grade shall be used. Reagent solutions shall be preserved in plastic bottles (products made of polyethylene, polypropylene, and tetrafluoroethylene resin are available.). The standard solutions being SI traceable shall be used.

7.2.2.1 Water, Grade 1 or superior as specified in ISO 3696.

7.2.2.2 Sodium carbonate, anhydrous, as specified in ISO 6353-3 or that of higher grade.

7.2.2.3 Hydrochloric acid (1+1), (1+50), prepare from hydrochloric acid, respectively.

7.2.2.4 Sodium hydroxide, more than 97,0 % (mass fraction) of purity.

7.2.2.5 Sodium hydroxide solution (200 g/l), (40 g/l), (20 g/l), prepare from sodium hydroxide, respectively.

7.2.2.6 Ethanol (95).

7.2.2.7 Ethanol–Sodium hydroxide (1+1) mixed solution, prepare by mixing the same volume of ethanol (95) and a sodium hydroxide solution (200 g/l).

7.2.2.8 Mannitol.

7.2.2.9 Boric acid, more than 99,5 % (mass fraction) of purity.

7.2.2.10 Standard boron solution, weigh 1 g of boric acid (7.2.2.9) in a platinum crucible (for example, 30 ml) and heat it initially at a low temperature and finally at about 1 100 °C. After cooling in a desiccator, weigh the mass of boric oxide as B_2O_3. Take the product into a 200 ml beaker together with the crucible and add 100 ml of hot water. Heat and dissolve it. After cooling, transfer the solution into a 200 ml volumetric flask and dilute with water to the mark.

7.2.2.11 Methyl-red indicator solution, prepare by dissolving 0,10 g of methyl-red with 50 ml of ethanol (95) (7.2.2.6) to make up to 100 ml by adding water.

7.2.2.12 0.2 mol/ l Sodium hydroxide solution, weigh 50 g of sodium hydroxide in a polyethylene bottle and dissolve in 50 ml of water under cooling. Stand for a few days with a cap to precipitate sodium carbonate. Take 20 ml of the supernatant and dilute with water to 2 000 ml. Preserve it into a polyethylene bottle equipped with an absorption tube of carbon dioxide. The volume of equivalent to the boron shall be obtained according to the following. Take exactly 50 ml of the standard boron solution (7.2.2.10) into a 200 ml beaker and add 12 ml of hydrochloric acid (1+1) (7.2.2.3) and a few drops of methyl-red indicator

© ISO 2014 – All rights reserved
Documents
Document Sharing Hub
Full document details: BS ISO 17942:2014

solution (7.2.2.11). After neutralization with the sodium hydroxide solution (40 g/l) (7.2.2.5), operate in accordance with 7.2.5 g). Calculate the factor of this solution according to the following formula:

$$F = \left(G \times \frac{0{,}1748}{V_0} \right) \times \frac{50}{200} \tag{1}$$

where

F is the factor of boron content of 0,2 mol/l sodium hydroxide solution per 1 ml (g/ml);

G is the weighed amount of boric acid in 7.2.2.9 (g);

V_0 is the consumed volume of 0,2 mol/l sodium hydroxide solution after addition of mannitol in 7.2.2.12 (ml).

7.2.3 Apparatus

Apparatus shall be as follows:

7.2.3.1 Platinum crucible (30 ml), with a platinum lid.

7.2.3.2 Electric furnace, adjustable to the temperature of (1 100 ± 25) °C.

7.2.3.3 pH meter, readable to the smallest value of 0,1 equipped with a glass electrode.

7.2.4 Amount of sample

The weighed amount of the sample shall be 0,10 g.

7.2.5 Operation

The operation shall be as follows.

a) Take the sample aliquot into a platinum crucible (30 ml) and 2 ml of the ethanol–sodium hydroxide mixed solution (7.2.2.7).

b) Heat on a hot plate, and then evaporate until dry.

c) Add 2,0 g of sodium carbonate and heat initially at a low temperature. Elevate the temperature gradually to start fusing (heat carefully to prevent the contents from scattering) by using an electric furnace or a Bunsen burner and keep the temperature for 15 min ~ 30 min during fusion. Fuse the sample at 950 °C ~ 1 000 °C. Keep the temperature as low as possible.

d) Stand the crucible for cooling with a lid and place the crucible into a 300 ml beaker. Add 50 ml of water and 10 ml of hydrochloric acid (1+1) (7.2.2.3) and heat it on a hot plate with a watch glass to dissolve the melt.

e) After dissolving, wash the crucible with small amount of water and add a few drops of the methyl-red indicator solution (7.2.2.11). Neutralize the solution with a sodium hydroxide solution until its colour turns yellow, and then add hydrochloric acid (1+50) (7.2.2.3) to return to red again.

f) Remove carbon dioxide in the solution by boiling or by purging nitrogen gas for 5 min with the watch glass. Cool down to room temperature and wash the watch glass with small amount of water before removing. Keep the total water volume not more than 150 ml while washing.

g) Stirring with a magnetic stirrer, titrate with 0,2 mol/l sodium hydroxide solution (7.2.2.12), depict a titration curve around pH 6,4 using a pH meter, and determine the inflection point of the curve. After removing the electrode, add 25 g of mannitol (7.2.2.8). Titrate again with the sodium hydroxide

AVA Documents
Document Sharing Hub

© ISO 2014 – All rights reserved

Full document details: BS ISO 17942:2014

solution (7.2.2.12), depict a titration curve around pH 8,5, and determine the inflection point of the curve. Calculate the total volume of titrant between two inflection points.

7.2.6 Blank test

Perform operations of 7.2.5 a) to 7.2.5 g) without taking a sample to obtain the blank test value of boron.

7.2.7 Calculation

Calculate the content of total boron in the sample according to the following formula:

$$T.B = \frac{(V_1 - V_0) \times F}{m} \times 100 \qquad (2)$$

where

$T.B$ is the content of total boron in the sample [% (mass fraction)];

V_1 is the total volume of the 0,2 mol/l sodium hydroxide solution after the first addition of mannitol in 7.2.5 g) (ml);

V_0 is the total volume of the 0,2 mol/l sodium hydroxide solution of the blank test after the first addition of mannitol in 7.2.6 (ml);

F is the factor of the 0,2 mol/l sodium hydroxide solution in 7.2.2.12 (g);

m is the weighed amount of the sample in 7.2.5 a) (g).

7.3 Fusion-ICP-OES

7.3.1 Principle

To prepare a test solution, decompose the sample using base, spray into the argon plasma flame of ICP-OES, and measure the emission intensity at a selected wavelength.

This method can be used to obtain the results of two figures.

7.3.2 Reagents

Use only reagents of analytical grade unless stated to the contrary and prepare all solutions using distilled or deionized water and store in polyethylene bottles.

WARNING — Hydrochloric acid causes burns and has an irritating vapour. Prevent inhalation and contact with skin and eyes. Proceed as for sulfuric acid, carrying out the dilution in a fume cupboard.

7.3.2.1 Hydrochloric acid, concentrated, density 1,095 g/ml.

7.3.2.2 Hydrochloric acid (1+1 solution), carefully add 50 ml of acid to 50 ml of water to a beaker cooled in a water bath. Stir the mixture continuously. Allow to cool and store.

7.3.2.3 Nitric acid, ρ 1,42 g/ml.

7.3.2.4 Sodium peroxide (Na_2O_2).

7.3.2.5 Sodium carbonate, anhydrous.

© ISO 2014 – All rights reserved
Documents
Document Sharing Hub
Full document details: BS ISO 17942:2014

7.3.2.6 Ethanol.

7.3.2.7 Boron standard solution, containing 1,000 g of boron (*B*) per litre. Do not dry. Dissolve 5,716 g of anhydrous H_3BO_3 (B fraction = 0,174 9), accurately weighed to at least four significant figures, in reagent water and dilute in a 1 l volumetric flask with reagent water. Transfer immediately after mixing in a clean polytetrafluoroethylene (PTFE) bottle to minimize any leaching of boron from the glass container. The use of a non-glass volumetric flask is recommended to avoid boron contamination from glassware. A 1 ml of this standard solution contains 1,0 mg of boron.

7.3.3 Apparatus

Apparatus are ordinary laboratory apparatus and the following:

7.3.3.1 Glass beaker, with a range of appropriate volumes (100 ml, 250 ml).

7.3.3.2 Volumetric flask, with a range of appropriate volumes (100 ml, 250 ml, 500 ml, and 1 000 ml).

7.3.3.3 Burette, with a 0,1 ml scale and a maximum volume of 50 ml.

7.3.3.4 One-mark pipette, suitable for the transfer of each sample solution or standard solution.

7.3.3.5 Nickel crucibles.

7.3.3.6 Burner, such as a Mecker burner or a Bunsen burner.

7.3.3.7 Desiccator, containing dried silica gel as the drying agent.

7.3.3.8 Inductively coupled plasma emission spectrometer.

NOTE Refer to the manufacturer's instructions for operation.

7.3.4 Procedure

7.3.4.1 Preparation of test solution

a) Weigh, to the nearest 0,001 g, approximately 1,0 g of the test sample, and transfer the test sample in a nickel crucible.

b) Add 2,0 g of anhydrous sodium carbonate and 2,0 g of sodium peroxide and mix intimately. Heat over a burner slowly at first and gradually raise the temperature to the full heat until complete fusion.

   CAUTION — When heating the sample in the burner, carbon dioxide is produced. So be careful when heating the sample.

c) Cool to ambient temperature and place in a 250 ml beaker. Extract with approximately 150 ml of water containing 2 ml to 3 ml ethanol, heat to boiling until the melt from the walls of the crucible has been separated. Remove the crucible and wash it with a small amount of water.

d) Add 10 ml of hydrochloric acid (7.3.2.1) and heat to 100 °C until the melt is completely dissolved. Pour the dissolved sample into a 250 ml volumetric flask, make up to the mark, and mix.

e) Pipette 25 ml of the solution from the 250 ml volumetric flask into a new 250 ml volumetric flask, make up to the mark, and mix. This solution is used as the test solution.

© ISO 2014 – All rights reserved

Documents
Document Sharing Hub
Full document details: BS ISO 17942:2014

7.3.4.2 Blank test

Carry out the procedure given in 7.3.4.1 without the sample, but omit the fusion of the flux. Designate the resulting solution as blank solution.

7.3.4.3 Preparation of the calibration curve

a) To a series of six 100 ml volumetric flasks, add respectively 0 ml, 1 ml, 5 ml, 10 ml, 20 ml, and 50 ml boron standard solution (7.3.2.7). Add to each flask 5 ml hydrochloric acid 1+1, dilute to mark, and mix.

b) Spray a portion of each solution into the argon plasma flame of the inductively coupled plasma atomic emission spectrometer, and measure the emission intensity for boron at 249,677 nm, 249,772 nm, or 208,809 nm. Interferences may be encountered. Carefully choose the optimum wavelength free from concomitants.

7.3.5 Calculation

Determine the concentration of boron in the test solution and in the blank from the calibration curve. Calculate the boron content, B, as total boron, expressed in percent mass fraction, from Formula (3):

$$T.B = \frac{(C_1 - C_2) \times V}{m} \times 10^4 \qquad (3)$$

where

$T.B$ is the total boron content in mass fraction (%);

C_1 is the concentration, expressed in milligrams per litre, of boron in test solution;

C_2 is the concentration expressed in milligrams per litre, of boron in blank test;

V is the volume, in millilitres, of the test solution described in 7.3.4.1 d);

m is the mass, in grams, of the test portion.

8 Determination methods of free boron

8.1 Classification of determination methods

Boron nitride may somewhat tend to receive hydrolysis and yield equivalent of boron oxide and ammonia; only the latter evaporates. The determination of boron oxide in boron nitride may be critical when the equivalence between total boron and total nitrogen is evaluated. There are two approaches to extract boron oxide in boron nitride with acid or methanol, but either of them is accompanied by the slight dissolution of boron nitride. Extraction of only boron oxide without dissolving boron nitride is difficult. However, the contribution of boron generated from boron nitride can be evaluated by the determination of ammonia whose amount is equivalent to the boron.

Boron oxide shall be determined by any of the following methods. Both method A and method B include the correction procedure for the boron amount which arises from the hydrolysis of boron nitride during sample treatment stages. If analytical results with three or four figures are required for the total boron, method A or C shall be used; whereas if two figures, either method A or C, without the correction procedure or method B, can be used.

— Method A, Sulfuric acid digestion–ICP-OES and spectrophotometry

— Method B, Nitric acid digestion–ICP-OES

© ISO 2014 – All rights reserved
Documents
Document Sharing Hub
Full document details: BS ISO 17942:2014

— Method C, Methanol extraction–borate separation–ICP-OES and spectrophotometry

8.2 Sulfuric acid digestion-ICP-OES and spectrophotometry

8.2.1 Principle

Dissolve the sample in sulfuric acid and filtrate the insoluble. Determine boron by using ICP-OES. If analytical results of three or four figures for the total boron are determined, the correction procedure including ammonia determination of 8.2.5 a) and 8.2.5 c) to 8.2.5 f) shall be necessary.

8.2.2 Reagents

Reagents shall be as follows.

8.2.2.1 Water, as specified in 7.2.2.1**.**

8.2.2.2 Sulfuric acid, 0,5 mol/l, prepare with sulfuric acid.

8.2.2.3 EDTA solution (5 g/100 ml), prepare with EDTA.

8.2.2.4 Sodium hydroxide solution (20 g/100 ml), prepare with sodium hydroxide.

8.2.2.5 Phenol.

8.2.2.6 Acetone.

8.2.2.7 Sodium phenoxide solution, take 55 ml of a sodium hydroxide solution (20 g/100 ml) (8.2.2.4) in a beaker and gradually add 25 g of phenol (8.2.2.5) to the solution cooling in cold water. After cooling, add 6 ml of acetone (8.2.2.6) and dilute with water to 200 ml. Store in a dark room below 10 °C.

8.2.2.8 Sodium hypochlorite solution, [1 % (mass fraction) of available chlorine]. Prepare by diluting a commercial sodium hypochlorite solution, 5 % ~ 12 % (mass fraction) of available chlorine content, with water. Prepare fresh immediately before use.

8.2.2.9 Ammonium ion standard solution (NH_4^+ 1 mg/ml).

NOTE A commercial standard solution being SI traceable is available.

8.2.2.10 Ammonium ion standard solution (NH_4^+ 0.1 mg/ml), take 10 ml of an ammonium ion standard solution (NH_4^+ 1 mg/ml) (8.2.2.9) into a 100 ml plastic volumetric flask and dilute with water to the mark.

NOTE Products made of polyethylene, polypropylene, and tetrafluoroethylene resin are available for the plastic volumetric flask.

8.2.2.11 Boron standard solution (B 1 mg/ml).

NOTE A commercial standard solution being SI traceable is available.

8.2.2.12 Boron standard solution (B 0,1 mg/ml), take 10 ml of a boron standard solution (1 mg/ml) (8.2.2.11) into a 100 ml plastic volumetric flask, and dilute with water to the mark. Prepare fresh immediately before use.

NOTE Products made of polyethylene, polypropylene, and tetrafluoroethylene resin are available for the plastic volumetric flask.

© ISO 2014 – All rights reserved

Documents
Document Sharing Hub
Full document details: BS ISO 17942:2014

8.2.3 Instruments

Instruments shall be as follows.

8.2.3.1 ICP optical emission spectrometer.

8.2.3.2 Spectrophotometer.

8.2.4 Amount of sample

The weighed amount of sample shall be 0,5 g.

8.2.5 Operation

The operation shall be as follows.

a) Take the sample into a 200 ml plastic beaker (products made of polyethylene, polypropylene, and tetrafluoroethylene resin are available), and add 15ml of 0,5 mol/l sulfuric acid (8.2.2.2) and 35 ml of water. While stirring it occasionally at room temperature, let it stand for 2 h. Wash out the solution into a 100 ml volumetric flask and dilute with water to the mark. After shaking well, filter the solution with a dried filter paper. This filtrate shall be used as the sample solution.

b) Spray a portion of the solution of 8.2.5 a) into an Ar plasma of ICP-OES and measure the emission intensity of boron at optimum wavelength, for example, 249,77 nm.

NOTE The optimum wavelengths used for the measurement depend on the performance of each ICP spectrometer. Select the wavelength at which the measurement is not affected by concomitants. For equipment which can be used to measure with higher order spectrum lines, higher wavelength shall be used considering spectral interference and sensitivity.

c) Take an aliquot of the sample solution 8.2.5 a) (NH_4^+ 5 µg ~ 100 µg) in a 100 ml plastic volumetric flask (products made of polyethylene, polypropylene, and tetrafluoroethylene resin are available) and add water to make about 30 ml.

d) Add 1 ml of the EDTA solution 8.2.2.3 and 10 ml of the sodium phenoxide solution (8.2.2.7) and mix well.

e) Add 5ml of the sodium hypochlorite solution (8.2.2.8) and dilute with water to the mark and shake well. Keep the temperature of the solution at 20 °C ~ 25 °C and let it stand for 30 min.

f) Take an aliquot of the solution in an absorption cell and measure the absorbance in the vicinity of 630 nm.

8.2.6 Blank test

Perform operations of 8.2.5 a) and 8.2.5 b) without taking a sample to obtain the blank test value of boron and perform operations of 8.2.5 a) and 8.2.5 c) to 8.2.5 f) to obtain the blank value of ammonia.

8.2.7 Drawing calibration curves

a) Take 15 ml of 0.5 mol/l sulfuric acid (8.2.2.2) and 35 ml of water into several 100 ml plastic flasks (products made of polyethylene, polypropylene, and tetrafluoroethylene resin are available), then add exactly 0 ml ~ 10 ml of the boron standard solution (8.2.2.12) stepwise. Dilute with water to the mark and mix well. These solutions for the calibration curve shall contain 0 µg ~ 1 000 µg of boron. Operate the step of 8.2.5 b) and establish the relation between the emission intensity and the amount of boron to draw a calibration curve.

b) Take exactly 0 ml to 20 ml of the ammonium ion standard solution (8.2.2.10) stepwise (NH_4^+ 0 µg ~ 200 µg) into several 100 ml plastic flasks (products made of polyethylene, polypropylene, and tetrafluoroethylene resin are available) and add water to make about 30ml. Operate the steps

© ISO 2014 – All rights reserved
AVA Documents Document Sharing Hub
Full document details: BS ISO 17942:2014

of 8.2.5 c) to 8.2.5 f) and establish the relation between the emission intensity and the amount of ammonium to draw a calibration curve.

8.2.8 Calculation

Obtain the amount of boron by 8.2.5 a) to 8.2.5 b) and 8.2.6 referring to the calibration curve drawn in 8.2.7 a); whereas obtain the amount of ammonia by 8.2.5 c) to 8.2.5 f) and 8.2.6 according to the calibration curve drawn in 8.2.7 b). Calculate the content of free boron (boron oxide) in the sample according to the following formula:

$$F.B = \frac{\left[\left(A_1 - A_0\right)\times 3{,}220\right] - \left[\left(A_2 - A_{00}\right)\times 1{,}930\right]}{m} \times 100 \qquad (4)$$

where

$F.B$ is the content of free boron as boron oxide in the sample [% (mass fraction)];

A_1 is the amount of boron in the sample solution obtained by 8.2.5 b) and 8.2.7 a) (g);

A_0 is the amount of boron in the blank test solution obtained by 8.2.6 and 8.2.7 a) (g);

A_2 is the amount of ammonim ions in the sample solution obtained by 8.2.5 f) and 8.2.7 b) (g);

A_{00} is the amount of ammonium ions in the blank test solution obtained by 8.2.6 and 8.2.7 b) (g);

m is the weighed amount of the sample in 8.2.5 a) (g);

3,220 is the conversion factor of boron (B) into boron oxide (B_2O_3);

1,930 is the conversion factor of ammonium ion into the equivalent boron oxide (B_2O_3).

8.3 Nitric acid digestion-ICP-OES

8.3.1 Principle

Nitric acid digestion–ICP-OES is a method in which the soluble compounds in the boron nitride powder are obtained by treatment with diluted nitric acid. After filtration, the free boron in filtrate is determined by inductively coupled plasma–atomic emission spectroscopy.

8.3.2 Reagents

During the analysis, use only reagents of recognized analytical grade and only water of equivalent purity.

8.3.2.1 Water, use water purified in accordance with ISO 3696.

8.3.2.2 Nitric acid, ρ 1,42 g/ml.

8.3.2.3 Nitric acid, (1+9), Nitric acid (8.3.2.2) diluted 1+9.

8.3.2.4 Boron standard solution, containing 100 mg of boron (B) per litre. Transfer 10 ml of the boron standard solution (7.3.2.7) to 100 ml volumetric flask up to mark with water and mix.

8.3.3 Apparatus

Apparatus are ordinary laboratory apparatus and the following.

© ISO 2014 – All rights reserved

Documents
Document Sharing Hub
Full document details: BS ISO 17942:2014

8.3.3.1 Glass beaker, with a range of appropriate volumes (250 ml).

8.3.3.2 Volumetric flask, with a range of appropriate volumes (100 ml, 250 ml).

8.3.4 Procedure

8.3.4.1 Preparation of test solution

Weigh, to the nearest 0,001 g, approximately 3,0 g of the test sample, and transfer to a 250 ml glass beaker. Add 100 ml of the nitric acid (1+9) and heat to boiling for approximately 3 h. Cool the solution and then filter through a 15 cm paper of medium porosity. Rinse the beaker and wash the residue with water. Transfer the filtrate to 250 ml volumetric flask make up to mark with water and mix. This solution is used as the test solution.

8.3.4.2 Blank test

Carry out the procedure given in 8.3.4.1 without the sample, but omit the fusion of the flux. Designate the resulting solution as blank solution.

8.3.4.3 Preparation of the calibration solution and calibration curve

To a series of four 100 ml volumetric flasks, add respectively 0 ml, 1 ml, 5 ml, and 10 ml boron standard solution (7.3.2.7). Add to each flask 5 ml nitric acid (1+9), dilute to mark, and mix. Aspirate the calibration solutions into the inductively coupled plasma-atomic emission spectrometer (7.3.3.8). Measure the emission intensities for boron at 249,677 nm, 249,772 nm, or 208,809 nm.

8.3.5 Calculation

Determine the concentration of boron in the test solution and in the blank from the calibration curve. Calculate the boron content, *F.B*, as free boron, expressed in milligrams per kilogram, from Formula (5):

$$F.B = \frac{(C_1 - C_2) \times V}{m} \tag{5}$$

where

$F.B$ is the content of free boron as boron oxide in mg/kg (mass fraction);

C_1 is the concentration, expressed in milligrams per litre, of boron in test solution;

C_2 is the concentration expressed in milligrams per litre, of boron in blank test;

V is the volume, in millilitres, of the test solution;

m is the mass, in grams, of the test portion.

8.4 Methanol extraction-borate separation-ICP-OES and spectrophotometry

8.4.1 Principle

Convert boron oxide in the sample into a volatile borate by heating with methanol, trap into a calcium hydroxide solution and determine the boron in the solution using ICP-OES. If analytical results of three or four figures for the total boron are determined, the correction procedure including ammonia determination of 8.4.5 b) shall be necessary.

© ISO 2014 – All rights reserved
Documents
Document Sharing Hub
Full document details: BS ISO 17942:2014

8.4.2 Reagents

Reagents shall be as follows.

8.4.2.1 Water, as specified in 7.2.2.1.

8.4.2.2 Methanol.

8.4.2.3 Calcium hydroxide saturated solution, add 500 ml of water to 5 g of calcium hydroxide and seal with an airtight stopper. After shaking vigorously, use the supernatant. Prepare fresh immediately before use.

8.4.2.4 Hydrochloric acid (1+1), prepare from hydrochloric acid by diluting with the same volume of water.

8.4.2.5 Nitrogen gas, more than 99,99 % (volume fraction) of purity.

8.4.2.6 Sulfuric acid (25 mmol/l), prepare from sulfuric acid.

8.4.2.7 EDTA solution (5 g/100 ml), as specified in 8.2.2.3.

8.4.2.8 Sodium hydroxide solution (20 g/100 ml), as specified in 8.2.2.4.

8.4.2.9 Phenol, as specified in 8.2.2.5.

8.4.2.10 Acetone, as specified in 8.2.2.6.

8.4.2.11 Sodium phenoxide solution, as specified in 8.2.2.7.

8.4.2.12 Sodium hypochlorite solution (1 % (mass fraction) of effective chlorine), as specified in 8.2.2.8.

8.4.2.13 Ammonium ion standard solution (NH_4^+ 1 mg /ml), as specified in 8.2.2.9.

8.4.2.14 Ammonium ion standard solution (NH_4^+ 0.1 mg/ml), as specified in 8.2.2.10.

8.4.2.15 Boron standard solution (B 1 mg/ml), as specified in 8.2.2.11.

8.4.2.16 Boron standard solution (B 0.1 mg/ml), as specified in 8.2.2.12.

8.4.3 Apparatus and instruments

Apparatus and instruments shall be as follows.

8.4.3.1 Separator of boron, Figure 1 shows an example of a separator consisting of two parts, a reactor and a receiver. Connect two 200 ml Erlenmeyer flasks (one for a reactor and another for a receiver) by a quarts tube with a nitrogen gas inlet and an exhaust outlet. The flask for a reactor should be dried prior to use.

© ISO 2014 – All rights reserved

Documents
Document Sharing Hub
Full document details: BS ISO 17942:2014

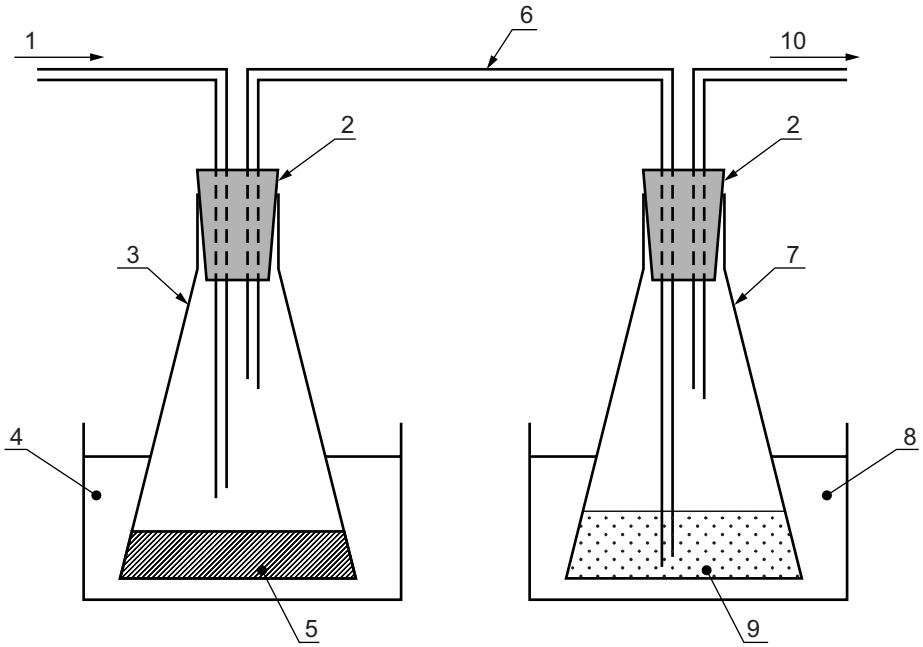

Key

1 N_2 gas
2 silicone rubber cap
3 reactor for borate generation
4 water bath at the temperature of 70 °C
5 sample with methanol
6 quartz tube
7 receiver for borate collection
8 iced water cooling reservoir
9 absorber of calcium oxide solution
10 exhaust

Figure 1 — Example of a separator for boron

8.4.3.2 Water bath, adjustable to 70 °C.

8.4.3.3 Iced water cooling reservoir, capable to cool the receiver.

8.4.3.4 ICP optical emission spectrometer.

8.4.3.5 Spectrophotometer.

8.4.4 Amount of sample

The weighed amount of sample shall be 0,5 g.

© ISO 2014 – All rights reserved
Documents
Document Sharing Hub
Full document details: BS ISO 17942:2014