BS ISO 17981:2024

BSI Standards Publication

Space systems — Cube satellite (CubeSat) interface

Documents
Document Sharing Hub

Full document details: BS ISO 17981:2024

National foreword

This British Standard is the UK implementation of ISO 17981:2024.

The UK participation in its preparation was entrusted to Technical Committee ACE/68, Space systems and operations.

A list of organizations represented on this committee can be obtained on request to its committee manager.

Contractual and legal considerations

This publication has been prepared in good faith, however no representation, warranty, assurance or undertaking (express or implied) is or will be made, and no responsibility or liability is or will be accepted by BSI in relation to the adequacy, accuracy, completeness or reasonableness of this publication. All and any such responsibility and liability is expressly disclaimed to the full extent permitted by the law.

This publication is provided as is, and is to be used at the recipient's own risk.

The recipient is advised to consider seeking professional guidance with respect to its use of this publication.

This publication is not intended to constitute a contract. Users are responsible for its correct application.

© The British Standards Institution 2024
Published by BSI Standards Limited 2024

ISBN 978 0 539 23751 1

ICS 49.140

Compliance with a British Standard cannot confer immunity from legal obligations.

This British Standard was published under the authority of the Standards Policy and Strategy Committee on 31 October 2024.

Amendments/corrigenda issued since publication

Date	Text affected

Documents
Document Sharing Hub

Full document details: BS ISO 17981:2024

International Standard

ISO 17981

Space systems — Cube satellite (CubeSat) interface

Systèmes spatiaux — Interface de satellite cubique (CubeSat)

First edition
2024-10

Reference number
ISO 17981:2024(en)

© ISO 2024

Documents
Document Sharing Hub

Full document details: BS ISO 17981:2024

COPYRIGHT PROTECTED DOCUMENT

© ISO 2024

All rights reserved. Unless otherwise specified, or required in the context of its implementation, no part of this publication may be reproduced or utilized otherwise in any form or by any means, electronic or mechanical, including photocopying, or posting on the internet or an intranet, without prior written permission. Permission can be requested from either ISO at the address below or ISO's member body in the country of the requester.

ISO copyright office
CP 401 • Ch. de Blandonnet 8
CH-1214 Vernier, Geneva
Phone: +41 22 749 01 11
Email: copyright@iso.org
Website: www.iso.org

Published in Switzerland

Documents
Document Sharing Hub
Full document details: BS ISO 17981:2024

Contents

Page

Foreword ... **iv**
Introduction ... **v**
1 Scope ... **1**
2 Normative references ... **1**
3 Terms and definitions ... **1**
4 Abbreviated terms ... **2**
5 Internal interface requirements ... **3**
5.1 Unit to unit interface ... 3
5.1.1 General ... 3
5.1.2 PC-104 style ... 3
5.1.3 Backplane style ... 6
5.2 Mission payload to platform interface ... 6
5.2.1 Mechanical connection ... 6
5.2.2 Connection methods ... 6
5.2.3 Ground lines ... 6
5.2.4 Power ... 6
5.2.5 Analogue data interface ... 6
5.2.6 Digital data interface ... 6
5.2.7 Debugging ... 6
5.2.8 EMC ... 7
5.2.9 Fault isolation and recovery ... 7
5.2.10 Harmlessness to other payloads, platform and missions ... 7
5.2.11 Safety requirements ... 7
5.2.12 Radiation ... 7
6 Datasheet requirements for CubeSat units ... **7**
6.1 General ... 7
6.2 General requirements ... 7
6.3 Electrical power system unit ... 9
6.4 Communication unit ... 10
6.5 Command and data handling unit ... 11
6.6 Attitude determination and control unit ... 11
6.7 Antenna unit ... 11
7 Datasheet requirements for CubeSat platforms ... **12**
7.1 General ... 12
7.2 Mechanical interface ... 12
7.3 Electrical interface ... 12
7.4 Software information ... 12
7.5 Operation-related Information ... 12
7.6 Safety information ... 13
7.7 Reliability information ... 13
7.8 Assembly, integration and testing Information ... 13
8 External electrical interface (umbilical) ... **14**
Annex A (informative) **Typical digital data communication for CubeSats** ... **15**
Annex B (informative) **PC-104 style example** ... **17**
Annex C (informative) **Backplane style example** ... **20**
Bibliography ... **34**

© ISO 2024 – All rights reserved

Documents
Document Sharing Hub
Full document details: BS ISO 17981:2024

Foreword

ISO (the International Organization for Standardization) is a worldwide federation of national standards bodies (ISO member bodies). The work of preparing International Standards is normally carried out through ISO technical committees. Each member body interested in a subject for which a technical committee has been established has the right to be represented on that committee. International organizations, governmental and non-governmental, in liaison with ISO, also take part in the work. ISO collaborates closely with the International Electrotechnical Commission (IEC) on all matters of electrotechnical standardization.

The procedures used to develop this document and those intended for its further maintenance are described in the ISO/IEC Directives, Part 1. In particular, the different approval criteria needed for the different types of ISO document should be noted. This document was drafted in accordance with the editorial rules of the ISO/IEC Directives, Part 2 (see www.iso.org/directives).

ISO draws attention to the possibility that the implementation of this document may involve the use of (a) patent(s). ISO takes no position concerning the evidence, validity or applicability of any claimed patent rights in respect thereof. As of the date of publication of this document, ISO had not received notice of (a) patent(s) which may be required to implement this document. However, implementers are cautioned that this may not represent the latest information, which may be obtained from the patent database available at www.iso.org/patents. ISO shall not be held responsible for identifying any or all such patent rights.

Any trade name used in this document is information given for the convenience of users and does not constitute an endorsement.

For an explanation of the voluntary nature of standards, the meaning of ISO specific terms and expressions related to conformity assessment, as well as information about ISO's adherence to the World Trade Organization (WTO) principles in the Technical Barriers to Trade (TBT), see www.iso.org/iso/foreword.html.

This document was prepared by Technical Committee ISO/TC 20, *Aircraft and space vehicles*, Subcommittee SC 14, *Space systems and operations*.

Any feedback or questions on this document should be directed to the user's national standards body. A complete listing of these bodies can be found at www.iso.org/members.html.

© ISO 2024 – All rights reserved

Documents
Document Sharing Hub
Full document details: BS ISO 17981:2024

Introduction

This document provides requirements for internal and external interfaces of CubeSat. There is increasing demand of CubeSat development and utilization worldwide. CubeSats are often built with emphasis on low cost and fast delivery. Low cost can be achieved by extensive use of non-space-qualified commercial-off-the-shelf parts and units. Fast delivery is, however, often difficult to achieve when the interface of different units, such as printed circuit board (PCB), do not match each other. The incompatibility can cause significant delay in the satellite project, leading to the loss of business opportunity or academic/technology competition.

There is also increasing trend that a CubeSat platform that contains all the satellite bus functionalities by a single vendor is combined with a mission payload. A common standard on the interface between the CubeSat platform and the mission payload broadens the choice for the those who want to do a space mission but do not want to build a satellite to select the platform depending on their needs. This document makes it easier for CubeSat vendors to enter the market of CubeSat platforms.

This document aims to shorten the time required to design, develop, assemble, integrate and test CubeSat by clarifying the interface from the beginning of the satellite project. The document also aims to promote international trade of CubeSat units/platforms and international collaboration.

© ISO 2024 – All rights reserved

Documents
Document Sharing Hub
Full document details: BS ISO 17981:2024

Documents
Document Sharing Hub

Space systems — Cube satellite (CubeSat) interface

1 Scope

This document describes internal and external interfaces of CubeSat. The internal interface includes the interface between components and the interface between a CubeSat platform and a mission payload. The external interface is limited to the umbilical connectors, i.e. access port. The document also describes the items to be included in the datasheet of the CubeSat components and platforms. The datasheet requirements apply to catalogued commercial products ready for sale.

This document does not cover the interface between CubeSat and its deployer, i.e. POD.

This document is applicable to CubeSats of all sizes.

2 Normative references

There are no normative references in this document.

3 Terms and definitions

For the purposes of this document, the following terms and definitions apply.

ISO and IEC maintain terminology databases for use in standardization at the following addresses:

— ISO Online browsing platform: available at https://www.iso.org/obp

— IEC Electropedia: available at https://www.electropedia.org/

3.1
CubeSat
picosatellite measuring 100 mm cubic and weighting 1,33 kg or less

[SOURCE: ISO 17770:2017, 3.1, modified — Note 1 to entry has been removed.]

3.2
CubeSat form factor
volume unit measuring 100 mm × 100 mm × 100 mm expressed by “U” to describe the volume of each *CubeSat* (3.1)

3.3
1U CubeSat
single Cubesat
satellite measuring 100 mm × 100 mm × 113,5 mm and weighing 1,33 kg or less

Note 1 to entry: For the exact external dimension, see ISO 17770.

3.4
3U CubeSat
triple Cubesat
satellite measuring 100 mm × 100 mm × 340,5 mm and weighing 4,00 kg or less

Note 1 to entry: For the exact external dimension, see ISO 17770.

© ISO 2024 – All rights reserved

Documents
Document Sharing Hub
Full document details: BS ISO 17981:2024

3.5
PC-104 style
CubeSat (3.1) architecture made of stackable printed circuit boards each of which has a 104-pin connector

Note 1 to entry: PC-104 is originally a specification of embedded computer to define both *CubeSat form factors* (3.2) and computer buses. PC-104 board used in CubeSat inherits an approximate size of 90 mm × 90 mm, a stackable 104-pin connector and four mounting holes at the corners from the original PC-104 specification.

3.6
backplane style
CubeSat (3.1) architecture made of one interface PCB at the bottom that is called backplane and other printed circuit boards vertically inserted to the backplane

3.7
CubeSat platform
combination of *CubeSat* (3.1) units to provide all the necessary satellite bus functionality, such as power, command and data handling, communication, attitude control

3.8
deployer
box that encloses *CubeSats* (3.1) within a confined volume with a lid at one side that closes the ejection port during the launch phase

EXAMPLE POD (picosatellite orbital deployer).

[SOURCE: ISO 17770:2017, 3.2, modified — Note 1 to entry has been removed; EXAMPLE has been added.]

4 Abbreviated terms

ADCS attitude determination control system

AGND analogue ground

BPB backplane board

CAD computer aided design

CAN controller area network

COTS Commercial off the shelf

DGND digital ground

ECSS European Cooperation for Space Standardization

EIA Electronic Industries Alliance

EMC electromagnetic compatibility

GND ground

I2C inter-integrated circuit

ISS international space station

I/O input and output

LVDS low voltage differential signalling

PCB printed circuit board

© ISO 2024 – All rights reserved

Documents
Document Sharing Hub
Full document details: BS ISO 17981:2024

POD	picosatellite orbital deployer
SCL	serial clock
SDA	serial data
SPI	serial peripheral interface
TIA	Telecommunications Industry Association
TRL	technology readiness level
UART	universal asynchronous receiver/transmitter
USB	Universal Serial Bus

5 Internal interface requirements

5.1 Unit to unit interface

5.1.1 General

The envelope shall have enough clearance or notches between the external panel and the unit so that harness can go through it. A unit shall not rely on the other units to mechanically fix itself. It shall be fixed by poles fixed to the satellite structure though the mounting holes or attached directly to the satellite structure. Connection via harness should be avoided as much as possible. Mating connectors should be available widely in the market. A tool to safely remove the mating connectors shall be available. Ground lines and pins, or grounding point shall be clearly marked and shall have the minimum resistance. In-rush current associated with activation shall be minimized. There should be two or more types of digital communication interfaces and one or more general purpose digital I/O and one or more analogue I/O. Spacing to the neighbouring components shall be enough to avoid collision during vibration.

5.1.2 PC-104 style

5.1.2.1 General

An example of PC-104 style is given in Annex B.

5.1.2.2 Envelope and mounting holes

Unit shall conform to the maximum envelope of 95,89 mm × 90,17 mm shown in Figure 1. Some part of the four sides should be notched to provide harness routing. Each unit shall be equipped with four mounting holes whose diameter is 3,2 mm or larger. The location of the mounting holes shall be as shown in Figure 1. No parts shall be mounted within 6,4 mm diameter from the centres of the mounting holes. The height of 104-pin female connectors, such as ESQ-126-38-G-D or compatibles, is 11,05 mm as shown in Figure 2. The parts height mounted on the top side (the side with the female connector) should not exceed 11 mm. Some units with tall parts such as ADCS can be necessary to be placed at the top of the stack. If the parts are mounted at the bottom side, the distance B in Figure 2 shall be extended by using a connector with long male connector pins, such as ESQ-126-39-G-D or compatibles, and adjusting the spacer length.

© ISO 2024 – All rights reserved

Documents
Document Sharing Hub
Full document details: BS ISO 17981:2024

Dimensions in millimetres

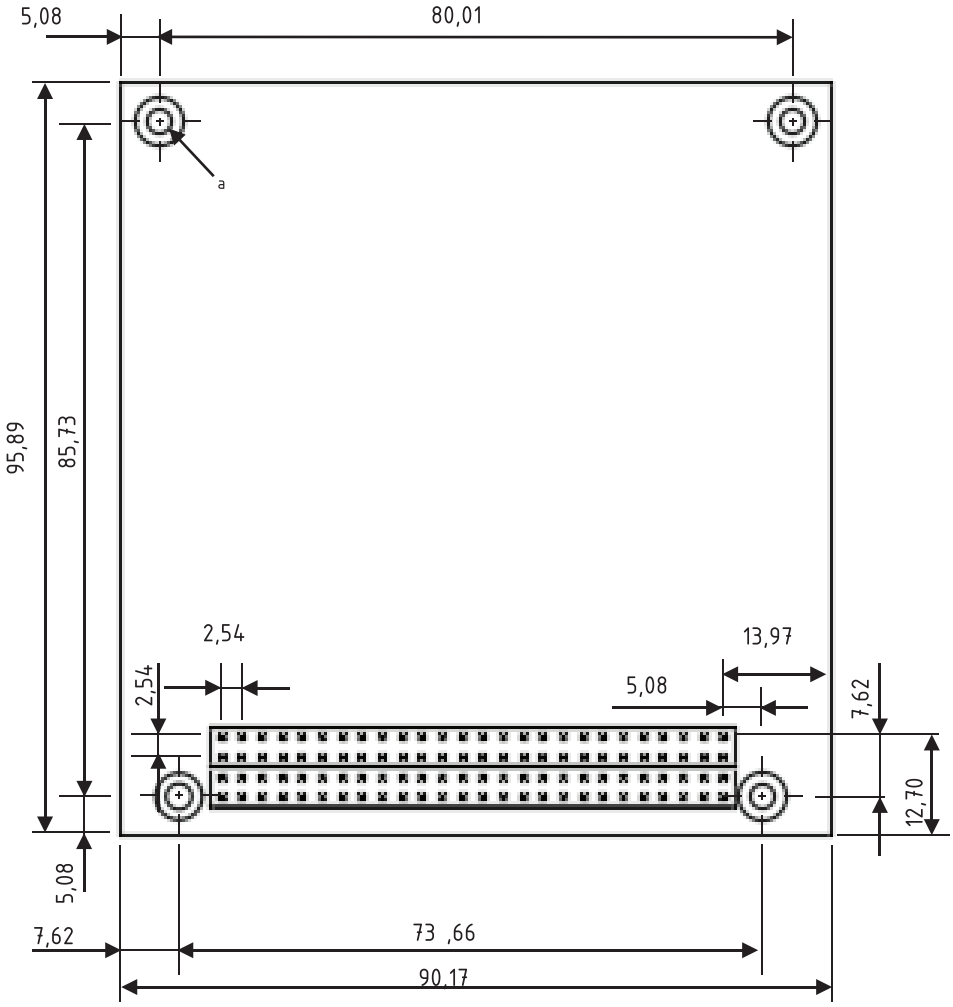

a 4-DIA3.2 THRU.

Figure 1 — PC-104 style UNIT

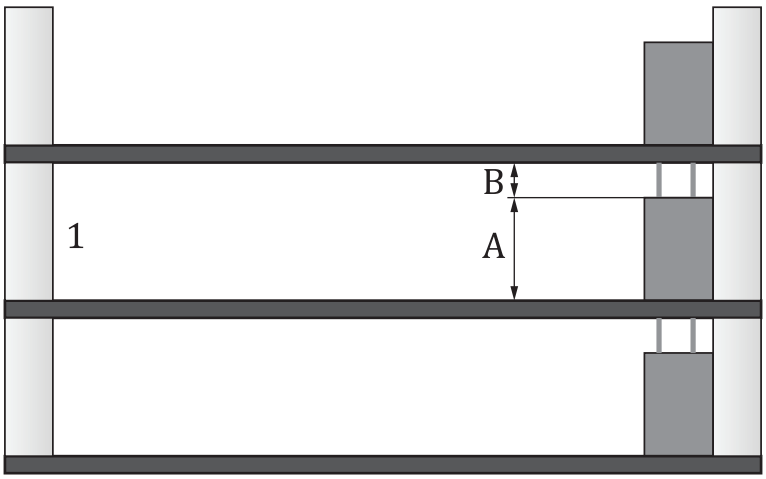

Key

1 spacer

Figure 2 — PC-104 style stacking condition

© ISO 2024 – All rights reserved

Documents
Document Sharing Hub
Full document details: BS ISO 17981:2024

5.1.2.3 Connector

Unit shall have a 104-pin connector. The connector is made of two double 26 pin connectors such as ESQ-126-38-G-D or compatibles. The exact location with respect to the mounting holes shall be as shown in Figure 1.

5.1.2.4 Ground lines

The pin numbers H2-29, H2-30, H2-31, H2-32 shall be allocated to the ground as shown in Figure 3.

5.1.2.5 Power lines

The pin numbers H2-25 and H2-26 shall be allocated to the regulated power of 5 V. The pin numbers H2-27 and H-28 shall be allocated to the regulated power of 3,3 V, as shown in Figure 3. Other pins may be assigned to deliver the power if necessary.

5.1.2.6 Analogue lines

Several pins shall be allocated for analogue data lines for sensing and other purposes.

5.1.2.7 Digital lines

The pin number H1-41 shall be allocated to the I^2C-SDA. The pin number H1-43 shall be allocated to I^2C-SCL, as shown in Figure 3. There is a variety of digital communication protocols used in CubeSat. Some are given in Annex A.

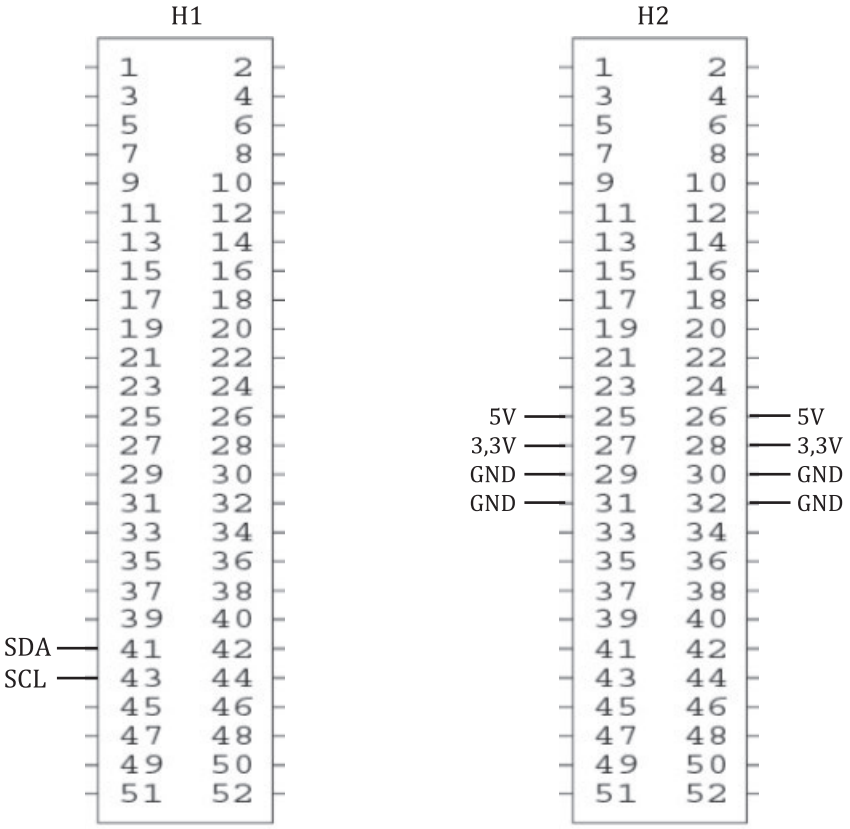

Figure 3 — PC-104 style pin assignment

5.1.2.8 Others

A proper tool, such as a PC/104 extractor tool, should be used to extract the PC-104 connector to avoid damaging the connector.

© ISO 2024 – All rights reserved

Documents
Document Sharing Hub
Full document details: BS ISO 17981:2024

5.1.3 Backplane style

Backplane routing shall be reconfigurable either via redesigning the hardware routing or via software change. The backplane shall be firmly attached to the satellite body preferably via bolts. Each unit attached to the backplane shall not use its connector for mechanical fixation. Care should be taken when data lines are near the regulated power lines on the backplane to avoid any noise coupling.

The direction of the connectors on the backplane shall be marked clearly so that no mistake occurs when a unit board is inserted to the backplane.

The connection to the external solar panels should be made via connectors to avoid harness. If harness is used, soldering the cables directly into PCB shall be avoided.

Examples of backplane style are given in Annex C.

5.2 Mission payload to platform interface

5.2.1 Mechanical connection

The mission payload shall be attached firmly to the CubeSat structure via through-holes or other methods. The connector should not be used to mechanically fix the payload to the satellite structure.

5.2.2 Connection methods

The payload and the platform are connected by:

— direct connection via connectors;

— indirect connection through a back-plane or an interface board; or

— harness.

5.2.3 Ground lines

Adequate ground lines shall be provided between the platform and the mission payload unless there is a specific need from the payload to have separate grounding.

5.2.4 Power

The platform shall provide stable power to the payload. In-rush current associated with activation of the mission payload shall not cause any harm to the platform operation.

5.2.5 Analogue data interface

At least one analogue connection between the platform and the mission payload shall be provided for analogue data transfer in both directions. If the interface is not bidirectional, at least one connection for each direction shall be provided.

5.2.6 Digital data interface

Two or more types of digital data communication shall be provided between the platform and the mission payload. Typical digital data communication protocols are listed in Annex A. At least one general purpose I/O between the platform and the mission payload shall be provided in both directions. If the interface is not bidirectional, at least one connection for each direction shall be provided.

5.2.7 Debugging

The CubeSat platform shall provide pins or connectors accessible from outside the satellite for monitoring and debugging of the mission payload software.

© ISO 2024 – All rights reserved

Documents
Document Sharing Hub
Full document details: BS ISO 17981:2024