BS ISO 18669-1:2013

BSI Standards Publication

Internal combustion engines — Piston pins

Part 1: General specifications

bsi.

...making excellence a habit.™

Document Sharing Hub

National foreword

This British Standard is the UK implementation of ISO 18669-1:2013. It supersedes BS ISO 18669-1:2004 which is withdrawn.

The UK participation in its preparation was entrusted to Technical Committee MCE/14/-/10, RIC engines - Cylinders, pistons and rings.

A list of organizations represented on this committee can be obtained on request to its secretary.

This publication does not purport to include all the necessary provisions of a contract. Users are responsible for its correct application.

© The British Standards Institution 2013. Published by BSI Standards Limited 2013

ISBN 978 0 580 69319 9

ICS 43.060.10

Compliance with a British Standard cannot confer immunity from legal obligations.

This British Standard was published under the authority of the Standards Policy and Strategy Committee on 31 August 2013.

Amendments issued since publication

Date	Text affected

Documents
Document Sharing Hub

Full document details: BS ISO 18669-1:2013

INTERNATIONAL STANDARD

ISO 18669-1

Second edition
2013-07-15

Internal combustion engines — Piston pins —

Part 1: General specifications

Moteurs à combustion interne — Axes de pistons —

Partie 1: Spécifications générales

Reference number
ISO 18669-1:2013(E)

Documents
Document Sharing Hub
© ISO 2013

Full document details: BS ISO 18669-1:2013

COPYRIGHT PROTECTED DOCUMENT

© ISO 2013

All rights reserved. Unless otherwise specified, no part of this publication may be reproduced or utilized otherwise in any form or by any means, electronic or mechanical, including photocopying, or posting on the internet or an intranet, without prior written permission. Permission can be requested from either ISO at the address below or ISO's member body in the country of the requester.

ISO copyright office
Case postale 56 • CH-1211 Geneva 20
Tel. + 41 22 749 01 11
Fax + 41 22 749 09 47
E-mail copyright@iso.org
Web www.iso.org

Published in Switzerland

© ISO 2013 – All rights reserved

Documents
Document Sharing Hub

Full document details: BS ISO 18669-1:2013

Contents

Page

Foreword ... **iv**

1 Scope ... **1**

2 Terms and definitions ... **1**
2.1 General ... 1
2.2 Geometrical and manufacturing features of piston pins ... 1

3 Symbols ... **2**

4 Nomenclature ... **3**
4.1 Outside, inside and end features ... 3
4.2 Outside edge and inside chamfer configurations ... 6
4.3 Outside-edge drop-off configuration ... 8

5 Codes ... **9**

6 Designation of piston pins ... **10**
6.1 Designation elements and order ... 10
6.2 Designation examples ... 11

7 Piston pin types, dimensions and tolerances ... **11**
7.1 Manufacturing types ... 11
7.2 Dimensions and tolerances ... 12

8 Material and heat treatment ... **17**
8.1 Type of material ... 17
8.2 Core hardness *l* core strength ... 19
8.3 Carburised and nitrided case depth ... 19
8.4 Surface hardness ... 20
8.5 Volume change ... 20

9 Common features ... **20**
9.1 Roughness of surfaces ... 20
9.2 Marking of piston pins ... 21
9.3 Miscellaneous ... 21

10 Quality requirements ... **22**
10.1 Material characteristics ... 22
10.2 Material defects ... 22
10.3 Visual defects ... 23

Bibliography ... **24**

© ISO 2013 – All rights reserved

Documents
Document Sharing Hub
Full document details: BS ISO 18669-1:2013

Foreword

ISO (the International Organization for Standardization) is a worldwide federation of national standards bodies (ISO member bodies). The work of preparing International Standards is normally carried out through ISO technical committees. Each member body interested in a subject for which a technical committee has been established has the right to be represented on that committee. International organizations, governmental and non-governmental, in liaison with ISO, also take part in the work. ISO collaborates closely with the International Electrotechnical Commission (IEC) on all matters of electrotechnical standardization.

The procedures used to develop this document and those intended for its further maintenance are described in the ISO/IEC Directives, Part 1. In particular the different approval criteria needed for the different types of ISO documents should be noted. This document was drafted in accordance with the editorial rules of the ISO/IEC Directives, Part 2. www.iso.org/directives

Attention is drawn to the possibility that some of the elements of this document may be the subject of patent rights. ISO shall not be held responsible for identifying any or all such patent rights. Details of any patent rights identified during the development of the document will be in the Introduction and/or on the ISO list of patent declarations received. www.iso.org/patents

Any trade name used in this document is information given for the convenience of users and does not constitute an endorsement.

The committee responsible for this document is ISO/TC 22, *Road vehicles*.

This second edition cancels and replaces the first edition (ISO 18669-1:2004), which has been technically revised.

ISO 18669 consists of the following parts, under the general title *Internal combustion engines — Piston pins*:

— *Part 1: General specifications*

— *Part 2: Inspection measuring principles*

© ISO 2013 – All rights reserved
Documents
Document Sharing Hub
Full document details: BS ISO 18669-1:2013

INTERNATIONAL STANDARD ISO 18669-1:2013(E)

Internal combustion engines — Piston pins —

Part 1: General specifications

1 Scope

This part of ISO 18669 specifies the essential dimensional characteristics of piston pins with an outer diameter between 8 mm and 100 mm, for reciprocating internal combustion engines for road vehicles and other applications. In addition, it establishes a vocabulary, a pin-type classification, material description based on mechanical properties, common features and quality requirements.

The use of this part of ISO 18669 may require a manufacturer and customer statistical process control agreement.

2 Terms and definitions

For the purposes of this document, the following terms and definitions apply.

2.1 General

2.1.1
piston pin
precision cylindrical component that connects the piston to the connecting rod and has a smooth hard peripheral surface

2.2 Geometrical and manufacturing features of piston pins

2.2.1 Bore types

2.2.1.1
cylindrical
pin having a straight cylindrical bore

2.2.1.2
centre web
pin inside diameter formed symmetrically from each end leaving a web in the pin centre

Note 1 to entry: The web is subsequently removed leaving a step as shown in Figure 3.

2.2.1.3
tapered
pin with conical-shaped inside diameter near the ends that reduces the weight of the piston pin

2.2.1.4
machined
pin with inside diameter produced solely by machining

2.2.1.5
seamless drawn tube
hollow steel product which does not contain any line junctures resulting from the method of manufacture

© ISO 2013 – All rights reserved

Documents
Document Sharing Hub
Full document details: BS ISO 18669-1:2013

2.2.1.6
end web
pin inner diameter formed from one end leaving a web near the opposite end

Note 1 to entry: The web is punched out. The pin is then drawn over a mandrel and a forming line may result as shown in Figure 4.

2.2.2 Outside-edge configurations

2.2.2.1
chamfer
outside-edge bevelled feature that is sometimes used to mate with a round retainer ring

Note 1 to entry: Referred to as "locking chamfer" when a round wire retainer ring is located on the chamfer angle and used to secure the pin in the piston.

2.2.2.2
form angle δ
region of outside-edge form that provides a smooth transition to the peripheral surface to facilitate ease of assembly

2.2.2.3
form angle γ
region of outside-edge form that provides a smooth transition to the end face

2.2.2.4
drop-off
non-functional machining feature that creates a transition between the outside edge and the peripheral surface

Note 1 to entry: See Figure 12.

2.2.2.5
inside-edge chamfer
bevelled edge between the bore surface and the end faces of the piston pin

2.2.2.6
gauge point
locating point on the pin outside-edge chamfer from where the gauge diameter (d_5) and gauge length (l_5) are measured

2.2.3 Other features

2.2.3.1
volume change
change detected as a permanent outside-diameter dimensional deviation at reference temperature after being heated to a test temperature for a specified period of time

2.2.3.2
slag lines
linear flaws of non-metallic inclusions

3 Symbols

For the purposes of this part of ISO 18669, the symbols in Table 1 apply.

© ISO 2013 – All rights reserved
Documents
Document Sharing Hub
Full document details: BS ISO 18669-1:2013

Table 1 — Symbols

Symbol abbreviation	Description
a	Wall thickness
b	Outside-edge drop-off length
c	Outside-edge drop-off height
d_1	Outside diameter
d_2	Inside diameter
d_3	Tapered bore diameter
d_4	Centre-web diameter
d_5	Gauge diameter
d_6	End face diameter
e	Tapered bore runout
f	Outside-edge length
g	Outside-edge chamfer length
H_s	Limit hardness
h_1	End face concavity
h_2	End face step
k	Tapered bore relief
l_1	Length
l_3	Tapered bore length
l_4	Centre-web length
l_5	Gauge length
r	Outside-edge radius
R_m	Core strength
s	End face runout
t_1	Inside-edge chamfer length
t_2	Outside-edge form length
α	Tapered bore angle
β	Outside-edge chamfer angle
γ	Outside-edge form angle end face
δ	Outside-edge form angle

4 Nomenclature

4.1 Outside, inside and end features

Terms commonly used to describe pins with a cylindrical bore are shown in Figure 1.

© ISO 2013 – All rights reserved

Documents
Document Sharing Hub
Full document details: BS ISO 18669-1:2013

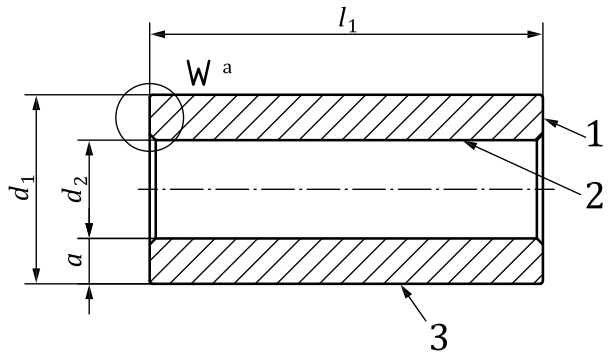

Key

1	end face
2	bore surface
3	peripheral surface
d_1	outside diameter
d_2	inside diameter
l_1	length
a	wall tickness
a	See Figure 2.

Figure 1 — Pin with cylindrical bore

Terms commonly used to describe end face concavity are shown in Figure 2a).

Terms commonly used to describe end face step are shown in Figure 2b).

a) End face concavity **b) End face step**

Key

h_1	end face concavity
h_2	end face step
d_6	end face diameter

NOTE End face concavity and end face step not recommended for end face locking.

Figure 2 — Detail W of Figure 1

Terms commonly used to describe pins with a centre web are shown in Figure 3.

© ISO 2013 – All rights reserved
Documents
Document Sharing Hub
Full document details: BS ISO 18669-1:2013

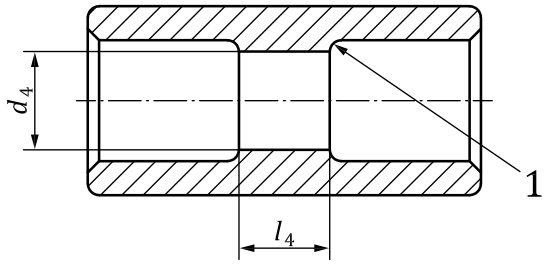

Key

1 centre-web radius

l_4 centre-web length

d_4 centre-web diameter

Figure 3 — Pin with cold-formed centre web

Terms commonly used to describe pins with a cold-formed end-web are shown in Figure 4.

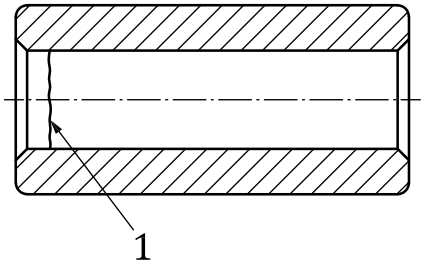

Key

1 end-web forming line

Figure 4 — Pin with cold-formed end web

Terms commonly used to describe pins with a tapered bore are shown in Figure 5.

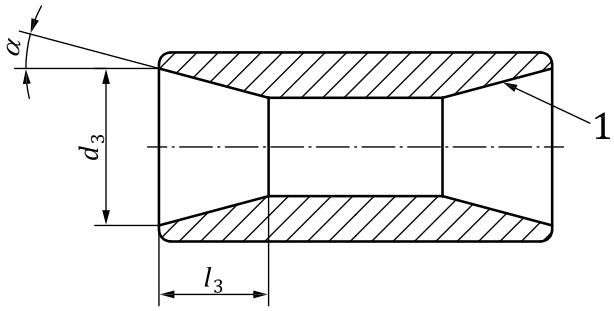

Key

1 tapered bore surface

α tapered bore angle

d_3 tapered bore diameter

l_3 tapered bore length

Figure 5 — Pin with tapered bore

© ISO 2013 – All rights reserved

Documents
Document Sharing Hub
Full document details: BS ISO 18669-1:2013