BS ISO 18871:2015

BSI Standards Publication

Method of determining coalbed methane content

bsi.

...making excellence a habit.™

Document Sharing Hub

Full document details: BS ISO 18871:2015

National foreword

This British Standard is the UK implementation of ISO 18871:2015.

The UK participation in its preparation was entrusted to Technical Committee PTI/15, Natural Gas and Gas Analysis.

A list of organizations represented on this committee can be obtained on request to its secretary.

This publication does not purport to include all the necessary provisions of a contract. Users are responsible for its correct application.

© The British Standards Institution 2015.
Published by BSI Standards Limited 2015

ISBN 978 0 580 86768 2

ICS 73.020

Compliance with a British Standard cannot confer immunity from legal obligations.

This British Standard was published under the authority of the Standards Policy and Strategy Committee on 31 October 2015.

Amendments issued since publication

Date	Text affected

Documents
Document Sharing Hub

Full document details: BS ISO 18871:2015

BS ISO 18871:2015

INTERNATIONAL STANDARD

ISO 18871

First edition
2015-09-15

Method of determining coalbed methane content

Méthode de dosage de la teneur en méthane de houille

Reference number
ISO 18871:2015(E)

Documents
Document Sharing Hub

© ISO 2015

Full document details: BS ISO 18871:2015

COPYRIGHT PROTECTED DOCUMENT

© ISO 2015, Published in Switzerland

All rights reserved. Unless otherwise specified, no part of this publication may be reproduced or utilized otherwise in any form or by any means, electronic or mechanical, including photocopying, or posting on the internet or an intranet, without prior written permission. Permission can be requested from either ISO at the address below or ISO's member body in the country of the requester.

ISO copyright office
Ch. de Blandonnet 8 • CP 401
CH-1214 Vernier, Geneva, Switzerland
Tel. +41 22 749 01 11
Fax +41 22 749 09 47
copyright@iso.org
www.iso.org

© ISO 2015 – All rights reserved

Documents
Document Sharing Hub

Full document details: BS ISO 18871:2015

Contents

Page

Foreword ..... **v**

1 Scope **1**

2 Terms and definitions **1**

3 Apparatus **3**
3.1 Desorption canister 3
3.2 Metering device 3
3.3 Thermostat 5
3.4 Temperature measuring devices 5
3.5 Barometer 5
3.6 Electronic balance (top load) 5
3.7 Standard sieve 5
3.8 Coal crusher 5
3.9 Hose 6
3.10 Gas-sample bottles 6
3.11 Padding 6
3.12 Quick connector 6
3.13 Gas analyser 6

4 Sample collection **7**
4.1 Preparation of sampling 7
4.1.1 General 7
4.1.2 Desorption canister 7
4.1.3 Metering device 7
4.1.4 Thermostat 7
4.2 Sampling principle 7
4.2.1 Sample quality 7
4.2.2 Sampling time 8
4.3 Sampling procedure 8
4.3.1 General 8
4.3.2 Core samples 8
4.3.3 Cutting samples 8
4.4 Coal lump samples 8
4.4.1 General 8
4.4.2 Parameters to record 8

5 Measuring method and process **9**
5.1 Use of core samples 9
5.1.1 Natural desorption 9
5.1.2 Measurement of residual gas 10
5.1.3 Gas sampling, composition analysis and isotope analysis 10
5.2 Use of cuttings samples or coal lump samples 12
5.2.1 Q2 measurement 12
5.2.2 Q3 measurement 12

6 Data processing **13**
6.1 Conversion of the desorbed gas volume 13
6.2 Reporting of gas content 13
6.3 Calculation of gas composition 13
6.4 Calculation of gas content 13
6.4.1 General 13
6.4.2 Calculation of lost gas content (Q1) 13
6.4.3 Calculation of gas desorption content (Q2) 15
6.4.4 Calculation of residual gas content (Q3) 15
6.4.5 Calculation of free gas content 16
6.4.6 Calculation of gas content 16

Documents
Document Sharing Hub

© ISO 2015 – All rights reserved

Full document details: BS ISO 18871:2015

6.4.7 Calculation of adsorption time ... 17
6.5 Numerical accuracy requirements ... 17

7 Measurement report ... 17

8 Quality commentaries ... 17
8.1 Quality commentary of sample collection ... 17
8.1.1 Situations should be noted on the record ... 17
8.2 Quality commentary on measuring operation ... 18
8.3 Conclusion of quality commentary ... 18
8.3.1 Qualified samples ... 18
8.3.2 Reference samples ... 18
8.3.3 Discard ... 18

Annex A (normative) **Raw data of gas natural desorption ... 19**

Annex B (normative) **Lost gas original records table ... 21**

Annex C (normative) **Lost gas volume calculation of Sample XX (direct method) ... 22**

Annex D (normative) **Cumulative gas desorption curve of sample XX ... 23**

Annex E (normative) **Measurement results table of CBM content ... 24**

Annex F (normative) **Sampling form for in-seam drilling ... 25**

Annex G (normative) **Sampling form for core drilling ... 26**

Annex H (normative) **Laboratory test form ... 27**

Annex I (normative) **Short report ... 28**

Bibliography ... 29

© ISO 2015 – All rights reserved
Documents
Document Sharing Hub
Full document details: BS ISO 18871:2015

Foreword

ISO (the International Organization for Standardization) is a worldwide federation of national standards bodies (ISO member bodies). The work of preparing International Standards is normally carried out through ISO technical committees. Each member body interested in a subject for which a technical committee has been established has the right to be represented on that committee. International organizations, governmental and non-governmental, in liaison with ISO, also take part in the work. ISO collaborates closely with the International Electrotechnical Commission (IEC) on all matters of electrotechnical standardization.

The procedures used to develop this document and those intended for its further maintenance are described in the ISO/IEC Directives, Part 1. In particular the different approval criteria needed for the different types of ISO documents should be noted. This document was drafted in accordance with the editorial rules of the ISO/IEC Directives, Part 2. www.iso.org/directives

Attention is drawn to the possibility that some of the elements of this document may be the subject of patent rights. ISO shall not be held responsible for identifying any or all such patent rights. Details of any patent rights identified during the development of the document will be in the Introduction and/or on the ISO list of patent declarations received. www.iso.org/patents

Any trade name used in this document is information given for the convenience of users and does not constitute an endorsement.

For an explanation on the meaning of ISO specific terms and expressions related to conformity assessment, as well as information about ISO's adherence to the WTO principles in the Technical Barriers to Trade (TBT), see the following URL: Foreword - Supplementary information

The committee responsible for this document is ISO/TC 263, *Coalbed methane (CBM)*.

© ISO 2015 – All rights reserved

Documents
Document Sharing Hub
Full document details: BS ISO 18871:2015

Documents
Document Sharing Hub

Method of determining coalbed methane content

1 Scope

This International standard provides methodology for measuring coalbed methane content of coal core samples obtained by coring or sidewall coring during well drilling. This standard has to be also applied to drill cuttings samples, if the equipment for the determination of the coalbed methane content according to a respective national standard is not available. The selection of the most appropriate method shall consider the purpose of the test and the possibilities of sampling.

This International standard is applicable for the direct method of measuring coalbed methane content. It includes sample preparation, experimental procedures and calculation methods. Indirect methods of measuring gas content of coal (not included in this International standard) are generally based on either the gas sorption characteristics of coal under defined/specified pressure and temperature conditions.

This International standard includes three types of direct measuring methods: conventional desorption (slow desorption) of core samples, fast desorption of core samples, fast desorption of cuttings or lump samples. The difference among them lies in the time allowed for gas to desorb before final crushing and in sample size and shape.

This International standard is applicable for the determination of the methane content of coal during coal and coalbed methane exploration for the determination of free gas content of low rank coals is included.

Procedure of free gas content determination of low rank coals need to be defined.

All units used and referred to in this International standard are international standard units. Reference temperature is 0 °C (273,15 K) if not stated differently. Reference pressure is 0,1 MPa (1 bar) if not stated differently.

This International standard does not point out all the potential safety hazards associated with its use. The users are responsible for establishing appropriate safety measures and health practices when applying the procedures defined in this standard.

2 Terms and definitions

For the purposes of this document, the following terms and definitions apply.

2.1
coalbed gas content
under natural conditions, quantity of gas contained in the unit mass of coal

Note 1 to entry: It is the sum of lost gas, measurable gas and residual gas.

2.2
coalbed methane content
methane content, which is commonly the major component of coalbed gas

Note 1 to entry: The terms “coalbed methane”, “coalbed gas” and “coal seam gas” are frequently used synonymously.

Note 2 to entry: If a component other than methane is the predominant component of coalbed gas this should be stated explicitly.

© ISO 2015 – All rights reserved

Documents
Document Sharing Hub

Full document details: BS ISO 18871:2015

2.3
Q1 (lost gas)
gas lost from the samples subsequent to its removal from its *in situ* position and prior to its containment in the canister, expressed as volume (at standard conditions) per unit mass of coal

2.4
Q2 (measurable gas)
measurable gas desorbed at atmospheric pressure from the non-pulverized coal sample, expressed as the quantity per unit mass of coal

2.5
Q3 (residual gas)
gas still contained in the coal sample before its pulverisation, expressed as the quantity per unit mass of coal

2.6
conventional desorption (slow desorption)
method of gas determination in which volumetric readings of canister gas content are taken frequently (every 5 min) during the first few (2 to 6) h, followed by hourly measurements for several hours, and then measurements on 24-h intervals until no or very little gas is being desorbed for an extended period of time

2.7
fast desorption
method of gas content determination in which a trend of gas desorbing from the coal sample is not established

Note 1 to entry: Measurements are taken over a period of time typically less than 1 day

2.8
sampling
activity that take some representative part of coal from coalbed

2.9
core sample
cylindrical section of rock (coal) that is usually 5 cm to 10 cm in diameter taken as part of the interval penetrated by a core bit and brought to the surface for geological examination, representative sampling, and laboratory analysis

2.10
cuttings sample
rock (coal) fragments, chips, particles with a size of typically ≤5 mm that break off because of the action of the drill bit and are transported to the surface by the drilling circulation system

2.11
coal lump samples
coal fragments or pieces of coal fragments that break off in the extraction or development process of a coal mine operation, from coal transport or storage or by manual removal from the coal seam or an intact core sample. The size is larger than that of cuttings and smaller than the inner diameter of the canister used for transportation and desorption

2.12
low-rank coal
the coal and rock thermal evolution degree is low, vitrinite of oil-immersed maximum reflectance $R_{v,max} \leq 0{,}65\%$, including lignite and long flame coal

[SOURCE: ISO 11760:2005]

2.13
high-rank coals
coal and rock thermal evolution degree is high, vitrinite of oil-immersed average random reflectance $\overline{R}_r \geq 2{,}0\%$, including anthracite coal

© ISO 2015 – All rights reserved
Documents
Document Sharing Hub
Full document details: BS ISO 18871:2015

3 Apparatus

3.1 Desorption canister

The desorption canister is a sealable container into which the coal samples are placed to determine their gas content. The canister should be designed such that the coal can be transferred into a pressure-tight status as quickly as possible.

Canisters should be easy to handle and fill and should close rapidly to form a gas sealed space.

The material of the canister shall not absorb coalbed gas, or react with drilling fluid and coalbed gas. Therefore, it is recommended to use aluminium alloy, coated aluminium, PVC and/or stainless steel materials.

When using core samples, the canister volume shall be more than 1 000cm^3 with a suitable inner diameter. It should maintain gas tightness up to a pressure of 0,3 MPa.

When using cuttings samples or coal lump samples, the canister volume shall be ≥ 500 cm^3. The ratio of canister volume and sample volume shall be between 70 and 150. The desorption canister shall be equipped with a shut-off valve and a rubber hose to connect it to a gas metering device and gas analyser (Figure 1).

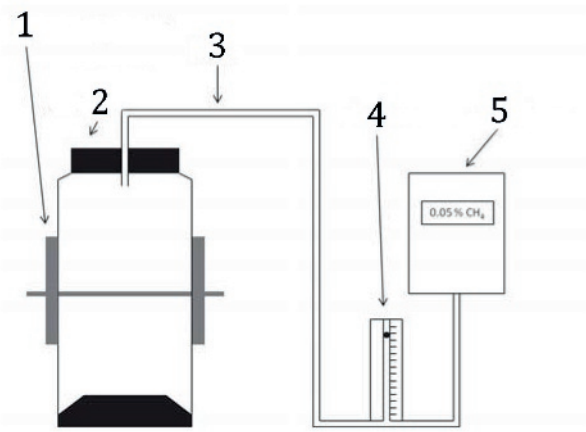

Key

1 squeezing device
2 desorption canister
3 hose
4 flowmeter
5 gas analyser

Figure 1 — Desorption canister with connection to gas analyser

3.2 Metering device

The measurement of desorbed gas volumes shall be executed either by the displacement of water (displacement method) or by flushing the crusher head with a defined volume of air and subsequent analysis of the gas composition (flushing method).

For the displacement method, a graduated measuring cylinder (burette) is used. The volume and scale of the measuring cylinder shall be appropriate to the desorption volume. The measuring cylinder and storage reservoir are preferably of glass. Readings of the gas volume are taken at atmospheric pressure by adjusting the liquid levels in the tube and the storage cup. The minimum graduation on the metering scale shall be no more than 10 cm^3. The measuring cylinder is connected at the bottom to a storage

AVA Documents
Document Sharing Hub

© ISO 2015 – All rights reserved

Full document details: BS ISO 18871:2015

reservoir and at the top to the desorption canister head. The connections shall be made of flexible and gas-tight plastic or rubber.

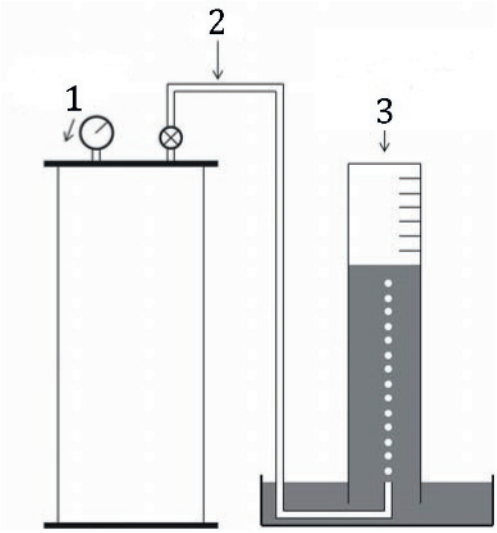

Key

1 desorption canister
2 hose
3 graduated cylinder

Figure 2 — Desorption canister with graduated cylinder for collection of desorbed gas

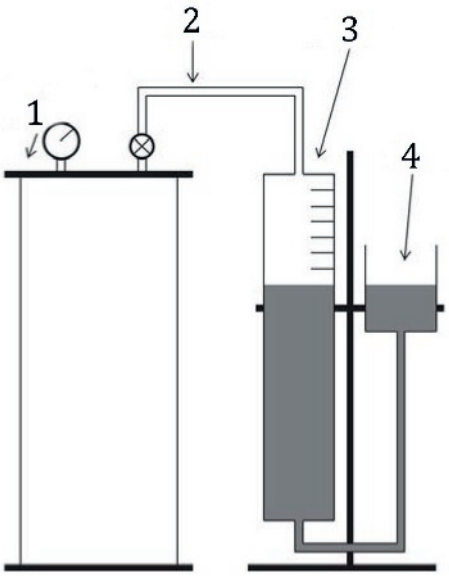

Key

1 desorption canister
2 hose
3 burette
4 storage reservoir

Figure 3 — Desorption canister with graduated burette and storage reservoir for pressure equilibration

© ISO 2015 – All rights reserved
Documents
Document Sharing Hub
Full document details: BS ISO 18871:2015