BS ISO 19028:2016

BSI Standards Publication

Accessible design — Information contents, figuration and display methods of tactile guide maps

bsi.

...making excellence a habit.™

Document Sharing Hub

National foreword

This British Standard is the UK implementation of ISO 19028:2016.

The UK participation in its preparation was entrusted to Technical Committee CH/173, Assistive products for persons with disability.

A list of organizations represented on this committee can be obtained on request to its secretary.

This publication does not purport to include all the necessary provisions of a contract. Users are responsible for its correct application.

© The British Standards Institution 2016.
Published by BSI Standards Limited 2016

ISBN 978 0 580 87179 5

ICS 11.180.30; 13.180

Compliance with a British Standard cannot confer immunity from legal obligations.

This British Standard was published under the authority of the Standards Policy and Strategy Committee on 30 April 2016.

Amendments/corrigenda issued since publication

Date	Text affected

Documents
Document Sharing Hub

Full document details: BS ISO 19028:2016

INTERNATIONAL STANDARD

ISO 19028

First edition
2016-04-01

Accessible design — Information contents, figuration and display methods of tactile guide maps

Conception accessible — Sommaire des informations, méthodes de figuration et d'affichage des plans de guide tactile

Reference number
ISO 19028:2016(E)

Documents
Document Sharing Hub

© ISO 2016

Full document details: BS ISO 19028:2016

COPYRIGHT PROTECTED DOCUMENT

© ISO 2016, Published in Switzerland

All rights reserved. Unless otherwise specified, no part of this publication may be reproduced or utilized otherwise in any form or by any means, electronic or mechanical, including photocopying, or posting on the internet or an intranet, without prior written permission. Permission can be requested from either ISO at the address below or ISO's member body in the country of the requester.

ISO copyright office
Ch. de Blandonnet 8 • CP 401
CH-1214 Vernier, Geneva, Switzerland
Tel. +41 22 749 01 11
Fax +41 22 749 09 47
copyright@iso.org
www.iso.org

© ISO 2016 – All rights reserved

Documents
Document Sharing Hub

Full document details: BS ISO 19028:2016

Contents

Page

Foreword ..... **iv**
Introduction ..... **v**
1 Scope **1**
2 Normative references **1**
3 Terms and definitions **1**
4 Information contents to be displayed on tactile guide maps **2**
5 Figuration of tactile guide maps **3**
6 Display methods **6**
7 Materials used for tactile guide maps **12**
Annex A (informative) **Japanese examples of tactile marks** **14**
Annex B (informative) **German examples of tactile marks** **18**
Annex C (informative) **Swedish examples of tactile marks** **26**
Bibliography **30**

© ISO 2016 – All rights reserved

Documents
Document Sharing Hub
Full document details: BS ISO 19028:2016

Foreword

ISO (the International Organization for Standardization) is a worldwide federation of national standards bodies (ISO member bodies). The work of preparing International Standards is normally carried out through ISO technical committees. Each member body interested in a subject for which a technical committee has been established has the right to be represented on that committee. International organizations, governmental and non-governmental, in liaison with ISO, also take part in the work. ISO collaborates closely with the International Electrotechnical Commission (IEC) on all matters of electrotechnical standardization.

The procedures used to develop this document and those intended for its further maintenance are described in the ISO/IEC Directives, Part 1. In particular the different approval criteria needed for the different types of ISO documents should be noted. This document was drafted in accordance with the editorial rules of the ISO/IEC Directives, Part 2 (see www.iso.org/directives).

Attention is drawn to the possibility that some of the elements of this document may be the subject of patent rights. ISO shall not be held responsible for identifying any or all such patent rights. Details of any patent rights identified during the development of the document will be in the Introduction and/or on the ISO list of patent declarations received (see www.iso.org/patents).

Any trade name used in this document is information given for the convenience of users and does not constitute an endorsement.

For an explanation on the meaning of ISO specific terms and expressions related to conformity assessment, as well as information about ISO's adherence to the WTO principles in the Technical Barriers to Trade (TBT) see the following URL: Foreword - Supplementary information

The committee responsible for this document is ISO/TC 173, *Assistive products for persons with disability*, Subcommittee SC 7, *Accessible design*.

© ISO 2016 – All rights reserved
Documents
Document Sharing Hub
Full document details: BS ISO 19028:2016

Introduction

As the number of older population and social participation of persons with disabilities is increasing, the improvement of the social infrastructure for these people is an urgent issue. Devices for mobility assistance to facilitate social participation of persons with seeing impairment and blindness have rapidly disseminated. Among others, a tactile guide map is a convenient tool for providing location information which is necessary for mobility of such people. Although the number of their installation has steadily increased, it has become obvious that, in the meantime, inappropriate or misleading tactile guide maps have been increasing, which has caused the users a big problem. To solve the problem, this International Standard provides the principal and standardized specifications concerning information contents, figuration and display methods of tactile guide maps.

© ISO 2016 – All rights reserved

Documents
Document Sharing Hub
Full document details: BS ISO 19028:2016

Documents
Document Sharing Hub

INTERNATIONAL STANDARD ISO 19028:2016(E)

Accessible design — Information contents, figuration and display methods of tactile guide maps

1 Scope

This International Standard specifies information contents, figuration and display methods of tactile guide maps providing location information of buildings, including those for the general public, public transport and parks, and also the surroundings in the close vicinity, including access routes to them in order to enable persons with seeing impairment and blindness to move safely and smoothly in those facilities.

2 Normative references

The following documents, in whole or in part, are normatively referenced in this document and are indispensable for its application. For dated references, only the edition cited applies. For undated references, the latest edition of the referenced document (including any amendments) applies.

ISO 17049, *Accessible design — Application of braille on signage, equipment and appliances*

ISO 21542:2011, *Building construction — Accessibility and usability of the built environment*

3 Terms and definitions

For the purposes of this document, the following terms and definitions apply.

3.1
tactile guide map
information map that provides persons with seeing impairment and blindness with location information of inside and outside of buildings including those for the general public, public transport and parks, which is made recognizable using, for example, convex (raised) lines and/or convex or concave (engraved) surfaces, *tactile marks* (3.6), braille and/or *raised characters* (3.10), and/or large print, having two types: an installed type in facilities, etc. and a portable booklet format

3.2
title
concise text in braille and/or *raised characters* (3.10) indicating the content of a *tactile guide map* (3.1)

3.3
commentary
information in braille and/or *raised characters* (3.10) to give general description of a *tactile guide map* (3.1), cautions and usage of *tactile marks* (3.6)

3.4
lettering
letters, numbers, words, or a combination of them to label items of interest in a *tactile guide map* (3.1)

3.5
legend
index with explanation of *tactile marks* (3.6) and/or abbreviations of braille, and/or *raised characters* (3.10) used for *tactile figures* (3.7)

© ISO 2016 – All rights reserved

Documents
Document Sharing Hub
Full document details: BS ISO 19028:2016

3.6
tactile marks
convex or concave marks used for a *tactile guide map* (3.1) to provide information on facilities and equipment

3.7
tactile figure
aggregated relief-like figure composed of convex lines and/or convex or concave surfaces, *tactile marks* (3.6), braille and/or *raised characters* (3.10)

3.8
printed characters
characters written in pencil, with a pen, and in print, not in Braille

3.9
large print
letters with high readability for people with residual vision

3.10
raised characters
specially designed raised/embossed characters composing letters and numbers readable by touch

3.11
tactile readability
ease of reading braille and other tactile information by touch

[SOURCE: ISO 17049:2013, 2.5]

3.12
pictogram
graphical composition that may include a symbol plus other graphic elements, such as a border, background pattern or colour that is intended to convey specific information

[SOURCE: ISO 17840-1:2015, 2.14]

3.13
tactile walking surface indicator
TWSI
standardized walking surface used for information by persons with seeing impairment and blindness

4 Information contents to be displayed on tactile guide maps

4.1 Composition of a tactile guide map

A tactile guide map shall be composed of the following contents:

a) title;

b) commentary;

A commentary can be omitted when a tactile guide map does not need any description of the content. For a tactile map in a booklet form, a commentary may be placed separately.

c) legend;

A legend can be omitted if a tactile guide map only contains common and easily recognizable tactile marks without need of explanation and does not use abbreviations in braille and raised characters.

d) tactile figures;

© ISO 2016 – All rights reserved
Documents
Document Sharing Hub
Full document details: BS ISO 19028:2016

e) other information contents:

1) scale;

When appropriate, to facilitate navigation, a scale to indicate distances in the map should be added.

2) north direction.

When appropriate, north direction should be indicated.

4.2 Principles for information contents

4.2.1 Tactile guide map shall be confined to the minimum information required to grasp the locality and/or path of travel.

The amount of information given in a tactile guide map will largely be determined by the purpose of the tactile map. The information given differs whether the map is for indicating a route of travel or to give an overview of an area. All information that does not serve the intended purpose of the tactile guide map shall be omitted.

EXAMPLE The information of the number of steps in each stairway is often given in the "orientation and mobility maps", which are specialized for training of the persons with seeing impairment and blindness, while in the common tactile maps, such information is usually omitted.

4.2.2 When selecting information to be displayed on the map, the contents which support safe and smooth movements of persons with seeing impairment and blindness shall be prioritized.

4.2.3 Tactile readability shall be considered of prior consideration.

The tactile readability of tactile information in guide maps is influenced by a variety of factors, which shall be considered in their mutual interdependence, which, in turn, will widely influence the selection, size and shape of tactile figures and marks.

When a visual guide map displaying the identical range to a tactile guide map is available, the maps shall maintain mutual consistency, though the amount of information may be different.

4.2.4 All types of tactile marks (whether tactile figures or lettering) contained in a tactile guide map shall be easily identifiable and be explained in the legend or by lettering in the respective area of the map.

4.2.5 Pictograms commonly used for sighted people in technical drawings or in wayfinding signage shall be avoided because they are too complicated and finely structured to be read by finger touch.

4.2.6 Printed characters may be also used along with tactile figures on a tactile guide map.

4.2.7 Instead of lettering points of installed guide maps, electronic tags giving out audio information about the particular points in the map can be used.

4.2.8 The date of production and the contact information should be displayed.

5 Figuration of tactile guide maps

5.1 Dimensions

The physical size of a tactile guide map shall correlate with the amount of information required for the purpose to be achieved by the tactile guide map in relation to the size of the location or area to be depicted in the map.

© ISO 2016 – All rights reserved

Documents
Document Sharing Hub
Full document details: BS ISO 19028:2016

The size of an installed tactile guide map should be within 600 mm in grip distance for desk installation (see Figure 1) and for wall installation (see Figure 2). When a tactile guide map is prepared in a booklet form, extra attention should be paid so that the folds do not hinder tactile reading.

5.2 Location of installed tactile guide maps

For a tactile guide map installed on the wall, which is perpendicular to the floor, the centre line height should be preferably 1 400 mm from the floor level.

These dimensions do not apply to guide maps which are set horizontally to the floor or inclined to angles close to horizontal installation (see Figure 1). In either case, a location that does not hinder tactile readability shall be chosen.

The clearance of the lowest part of the desk installation shall be 900 mm to enable wheelchair users to access. See ISO 21542:2011, 40.14.

Great care shall be taken to ensure that people with seeing impairment and blindness can find the installed tactile guide maps, e.g. by using tactile walking surface indicator (TWSIs) or similarly appropriate tactile guidance and/or audio guidance to lead them there or by installing floor plans at fixed places next to elevators, stairs, etc.

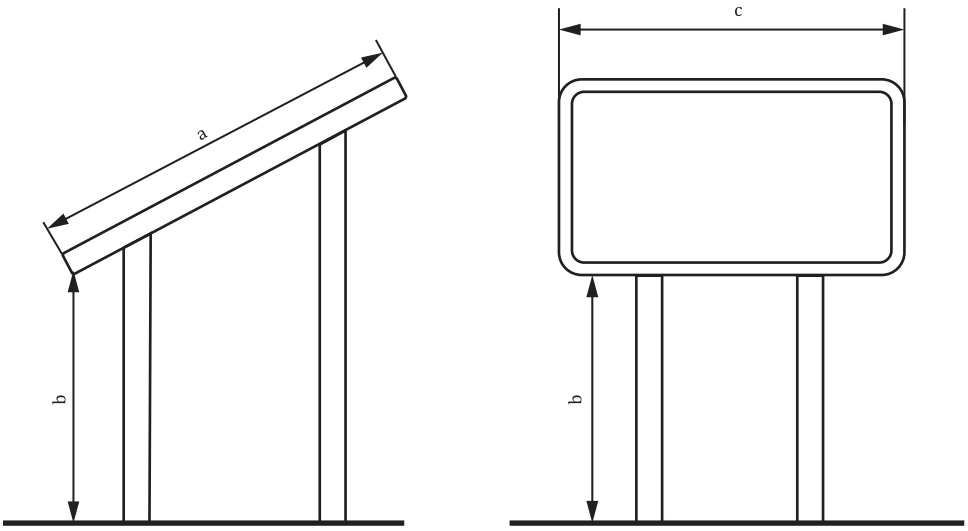

a Within 600 mm.

b 900 mm.

c Approximately 1 000 mm.

Figure 1 — Examples of figurations of desk installation type

When deciding the height of installation, the target group for a particular map should be taken in consideration, which may lead to other decisions concerning installation height of the map (e.g. when the target group are children).

© ISO 2016 – All rights reserved
Documents
Document Sharing Hub
Full document details: BS ISO 19028:2016

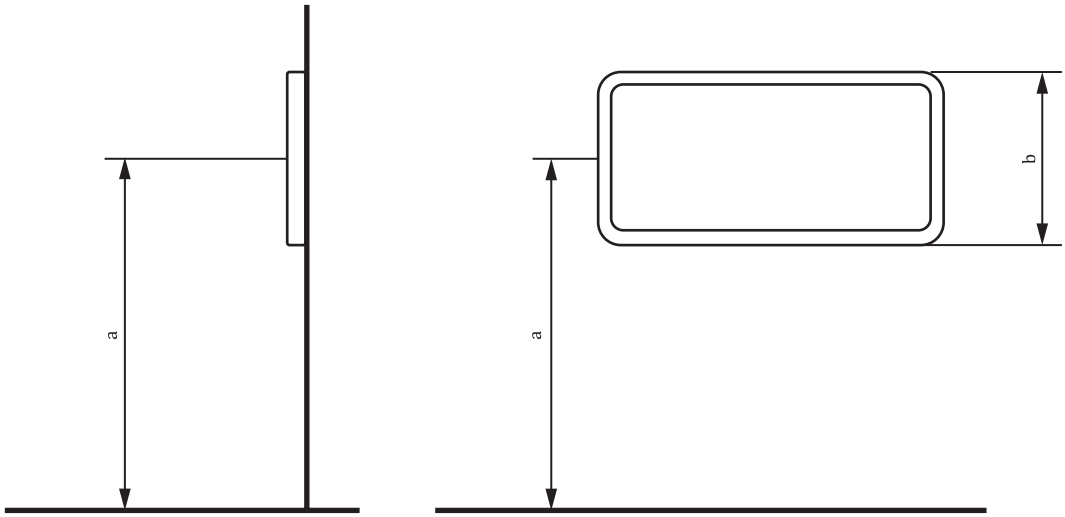

a Preferably 1 400 mm.

b Within 600 mm.

NOTE The frames of tactile guide maps are not included in the given measures of tactile maps.

Figure 2 — Examples of figurations of wall installation type

5.3 Directions of a tactile guide map

5.3.1 When installing a guide map, marks of directional reference and present location indicated in a tactile guide map shall strictly comply with the actual directions and present location in the place where the map is to be installed. For example, locations of a particular office depicted in the map to the right-hand side in a building shall be found on the right-hand side of the actual building.

NOTE When tactile guide maps are placed at an angle (e.g. 180° or any other angle to the actual directions), blind people face problems since they cannot see other landmarks as, e.g. flights of stairs, lifts, etc., which would enable them to adjust the faulty direction given in the map. Some people have difficulties in turning the map round in the mind.

5.3.2 Tactile guide maps for installation shall be placed in the way that a user can read the lettering and tactile figures well.

5.3.3 For guide maps which contain information on spatially overlapping area, such as the first floor and the second floor of a building, and guide maps which display one large space using multiple maps, the scale size and the direction shall be unified. When the maps of each floor are to be installed on respective floors, each guide map should be placed in the same location of respective floors and in the same direction.

Presenting two levels of a building or a place on top of each other in one tactile guide map is not permissible, because the elements to each level cannot be assigned by the blind reader unambiguously. If in a multi-storey building, several storeys should be displayed for reason of different layout of rooms or for information on rooms, separate individual maps for each storey are required. If needed, a cross section in side view of the building could be added, comprising several storeys to indicate transfer routes from one storey to another, different room arrangements, halls rising over more than one storey, etc.

5.3.4 Tactile guide maps in a booklet form may employ user-friendly directions, considering locations of doorways, flow-lines and so on.

© ISO 2016 – All rights reserved

Documents
Document Sharing Hub
Full document details: BS ISO 19028:2016