BS ISO 1928:2020

BSI Standards Publication

Coal and coke — Determination of gross calorific value

Documents
Document Sharing Hub

Full document details: BS ISO 1928:2020

National foreword

This British Standard is the UK implementation of ISO 1928:2020. It supersedes BS ISO 1928:2009, which is withdrawn.

The UK participation in its preparation was entrusted to Technical Committee PTI/16, Solid mineral fuels.

A list of organizations represented on this committee can be obtained on request to its committee manager.

This publication does not purport to include all the necessary provisions of a contract. Users are responsible for its correct application.

© The British Standards Institution 2020
Published by BSI Standards Limited 2020

ISBN 978 0 539 03589 6

ICS 75.160.10

Compliance with a British Standard cannot confer immunity from legal obligations.

This British Standard was published under the authority of the Standards Policy and Strategy Committee on 31 October 2020.

Amendments/corrigenda issued since publication

Date	Text affected

Documents
Document Sharing Hub

Full document details: BS ISO 1928:2020

INTERNATIONAL STANDARD

ISO 1928

Fourth edition
2020-10

Coal and coke — Determination of gross calorific value

Charbon et coke — Détermination du pouvoir calorifique supérieur

Reference number
ISO 1928:2020(E)

Documents
Document Sharing Hub

© ISO 2020

Full document details: BS ISO 1928:2020

COPYRIGHT PROTECTED DOCUMENT

© ISO 2020

All rights reserved. Unless otherwise specified, or required in the context of its implementation, no part of this publication may be reproduced or utilized otherwise in any form or by any means, electronic or mechanical, including photocopying, or posting on the internet or an intranet, without prior written permission. Permission can be requested from either ISO at the address below or ISO's member body in the country of the requester.

ISO copyright office
CP 401 • Ch. de Blandonnet 8
CH-1214 Vernier, Geneva
Phone: +41 22 749 01 11
Email: copyright@iso.org
Website: www.iso.org

Published in Switzerland

© ISO 2020 – All rights reserved

Documents
Document Sharing Hub

Full document details: BS ISO 1928:2020

Contents

Page

Foreword ..... **v**

1 Scope **1**

2 Normative references **1**

3 Terms, definitions and symbols **2**
3.1 Terms and definitions 2
3.2 Symbols 3

4 Principle **6**
4.1 Gross calorific value 6
4.2 Net calorific value 7

5 Reagents **7**

6 Apparatus **9**

7 Preparation of test sample **12**

8 Calorimetric procedure **13**
8.1 General 13
8.2 Preparing the combustion vessel for measurement 15
8.2.1 General procedure 15
8.2.2 Using a combustion aid 15
8.3 Assembling the calorimeter 15
8.4 Combustion reaction and temperature measurements 16
8.5 Analysis of products of combustion 16
8.6 Corrected temperature rise 17
8.6.1 Observed temperature rise, $t_f - t_i$ 17
8.6.2 Isoperibol and static-jacket calorimeters 17
8.6.3 Adiabatic calorimeters 18
8.6.4 Thermometer corrections 19
8.7 Reference temperature 19

9 Calibration **19**
9.1 Principle 19
9.2 Calibrant 19
9.2.1 Certification conditions 19
9.2.2 Calibration conditions 19
9.3 Valid working range of the effective heat capacity 20
9.4 Ancillary contributions 20
9.5 Calibration procedure 21
9.6 Calculation of effective heat capacity for the individual test 21
9.6.1 Constant mass-of-calorimeter-water basis 21
9.6.2 Constant total-calorimeter-mass basis 22
9.7 Precision of the mean value of the effective heat capacity 23
9.7.1 Constant value of ε 23
9.7.2 ε as a function of the observed temperature rise 23
9.8 Redetermination of the effective heat capacity 23

10 Gross calorific value **24**
10.1 General 24
10.2 Coal combustions 24
10.3 Coke combustions 24
10.4 Calculation of gross calorific value 25
10.4.1 General 25
10.4.2 Constant mass-of-calorimeter-water basis 25
10.4.3 Constant total-calorimeter-mass basis 26
10.4.4 ε as a function of the observed temperature rise 26
10.5 Expression of results 27

AVA Documents
Document Sharing Hub

© ISO 2020 – All rights reserved

Full document details: BS ISO 1928:2020

10.6 Calculation to other bases ... 27

11 Precision ... 28
11.1 Repeatability limit ... 28
11.2 Reproducibility limit ... 28

12 Calculation of net calorific value ... 28
12.1 General ... 28
12.2 Calculations ... 28
12.2.1 Calculation of net calorific value at constant pressure ... 28
12.2.2 Calculation of net calorific value at constant volume ... 30

13 Test report ... 31

Annex A (informative) **Adiabatic calorimeters ... 32**

Annex B (informative) **Isoperibol and static-jacket calorimeters ... 36**

Annex C (informative) **Automated calorimeters ... 42**

Annex D (informative) **Checklists for the design of combustion tests and their procedures ... 45**

Annex E (informative) **Examples to illustrate some of the calculations used in this document ... 50**

Annex F (informative) **Safe use, maintenance and testing of calorimeter combustion vessels ... 56**

Bibliography ... 62

© ISO 2020 – All rights reserved

Documents
Document Sharing Hub
Full document details: BS ISO 1928:2020

Foreword

ISO (the International Organization for Standardization) is a worldwide federation of national standards bodies (ISO member bodies). The work of preparing International Standards is normally carried out through ISO technical committees. Each member body interested in a subject for which a technical committee has been established has the right to be represented on that committee. International organizations, governmental and non-governmental, in liaison with ISO, also take part in the work. ISO collaborates closely with the International Electrotechnical Commission (IEC) on all matters of electrotechnical standardization.

The procedures used to develop this document and those intended for its further maintenance are described in the ISO/IEC Directives, Part 1. In particular the different approval criteria needed for the different types of ISO documents should be noted. This document was drafted in accordance with the editorial rules of the ISO/IEC Directives, Part 2. www.iso.org/directives

Attention is drawn to the possibility that some of the elements of this document may be the subject of patent rights. ISO shall not be held responsible for identifying any or all such patent rights. Details of any patent rights identified during the development of the document will be in the Introduction and/or on the ISO list of patent declarations received. www.iso.org/patents

Any trade name used in this document is information given for the convenience of users and does not constitute an endorsement.

For an explanation on the meaning of ISO specific terms and expressions related to conformity assessment, as well as information about ISO's adherence to the WTO principles in the Technical Barriers to Trade (TBT) see the following URL: Foreword — Supplementary information

This document was prepared by Technical Committee ISO/TC 27, *Coal and coke*, Subcommittee SC 5, *Methods of analysis*.

This fourth edition cancels and replaces the third edition (ISO 1928:2009), which has been technically revised.

The main changes compared to the previous edition are as follows:

— change the document title within the scope of TC 27,

— editorially update symbols within formulae,

— update references,

— expand on some derivations,

— remove ambiguity around crucible masses, and

— specify the analysis sample.

Any feedback or questions on this document should be directed to the user's national standards body. A complete listing of these bodies can be found at www.iso.org/members.html.

© ISO 2020 – All rights reserved

Documents
Document Sharing Hub
Full document details: BS ISO 1928:2020

Coal and coke — Determination of gross calorific value

WARNING — Strict adherence to all of the provisions specified in this document should ensure against explosive rupture of the combustion vessel, or a blow-out, provided that the combustion vessel is of proper design and construction and in good mechanical condition.

1 Scope

This document specifies a method for the determination of the gross calorific value of a solid mineral fuel at constant volume and at the reference temperature of 25 °C in a combustion vessel calorimeter calibrated by combustion of certified benzoic acid.

The result obtained is the gross calorific value of the analysis sample at constant volume with all the water of the combustion products as liquid water. In practice, fuel is burned at constant (atmospheric) pressure and the water is not condensed but is removed as vapour with the flue gases. Under these conditions, the operative heat of combustion is the net calorific value of the fuel at constant pressure. The net calorific value at constant volume can also be used; formulae are given for calculating both values.

General principles and procedures for the calibrations and the fuel tests are specified in the main text, whereas those pertaining to the use of a particular type of calorimetric instrument are described in Annexes A to C. Annex D contains checklists for performing calibration and fuel tests using specified types of calorimeters. Annex E gives examples illustrating some of the calculations. Annex F provides guidance around safe use, maintenance and testing of the calorimeter combustion vessel.

NOTE Descriptors: solid fuels, coal, coke, tests, determination, calorific value, rules of calculation, calorimetry.

2 Normative references

The following documents are referred to in the text in such a way that some or all of their content constitutes requirements of this document. For dated references, only the edition cited applies. For undated references, the latest edition of the referenced document (including any amendments) applies.

ISO 651, *Solid-stem calorimeter thermometers*

ISO 652, *Enclosed-scale calorimeter thermometers*

ISO 687, *Solid mineral fuels — Coke — Determination of moisture in the general analysis test sample*

ISO 1770, *Solid-stem general purpose thermometers*

ISO 1771, *Enclosed-scale general purpose thermometers*

ISO 5068-2, *Brown coals and lignites — Determination of moisture content — Part 2: Indirect gravimetric method for moisture in the analysis sample*

ISO 11722, *Solid mineral fuels — Hard coal — Determination of moisture in the general analysis test sample by drying in nitrogen*

ISO 13909-4, *Hard coal and coke — Mechanical sampling — Part 4: Coal — Preparation of test samples*

ISO 17247, *Coal and coke — Ultimate analysis*

ISO 18283, *Hard coal and coke — Manual sampling*

© ISO 2020 – All rights reserved

Documents
Document Sharing Hub
Full document details: BS ISO 1928:2020

3 Terms, definitions and symbols

3.1 Terms and definitions

For the purposes of this document, the following terms and definitions apply.

ISO and IEC maintain terminological databases for use in standardization at the following addresses:

— ISO Online browsing platform: available at https://www.iso.org/obp

— IEC Electropedia: available at http://www.electropedia.org/

3.1.1
gross calorific value at constant volume
absolute value of the specific energy of combustion for unit mass of a solid fuel burned in oxygen in a calorimetric combustion vessel under the conditions specified

Note 1 to entry: The products of combustion are assumed to consist of gaseous oxygen, nitrogen, carbon dioxide and sulfur dioxide, of liquid water (in equilibrium with its vapour) saturated with carbon dioxide under the conditions of the combustion vessel reaction, and of solid ash, all at the reference temperature.

Note 2 to entry: Gross calorific value is expressed in units of joules/gram.

3.1.2
gross calorific value at constant pressure
absolute value of the specific energy of combustion, for unit mass of a solid fuel burned in oxygen at constant pressure, instead of constant volume in a calorimetric combustion vessel

Note 1 to entry: The hydrogen in the fuel, reacting with gaseous oxygen to give liquid water, causes a decrease in the volume of the system. When the fuel carbon reacts with gaseous oxygen, an equal volume of gaseous carbon dioxide is formed and, hence, no change in volume occurs in combustion of the carbon. The oxygen and nitrogen in the fuel both give rise to an increase in volume.

3.1.3
net calorific value at constant volume
absolute value of the specific energy of combustion, for unit mass of a solid fuel burned in oxygen under conditions of constant volume and such that all the water of the reaction products remains as water vapour (in a hypothetical state at 0,1 MPa), the other products being as for the gross calorific value, all at the *reference temperature* (3.1.8)

3.1.4
net calorific value at constant pressure
absolute value of the specific heat (enthalpy) of combustion, for unit mass of the fuel burned in oxygen at constant pressure under such conditions that all the water of the reaction products remains as water vapour (at 0,1 MPa), the other products being as for the gross calorific value, all at the *reference temperature* (3.1.8)

3.1.5
adiabatic calorimeter
calorimeter that has a rapidly changing jacket temperature

Note 1 to entry: The inner calorimeter chamber and the jacket exchange no energy because the water temperature in both is identical during the test. The water in the external jacket is heated or cooled to match the temperature change in the calorimeter proper.

3.1.6
isoperibol calorimeter
<isothermal type> calorimeter that has a jacket of uniform and constant temperature

Note 1 to entry: These calorimeters have the inner chamber surrounded by a water jacket in which the temperature is maintained at ambient temperature. The outer jacket acts like a thermostat and the thermal conductivity of the interspace between the two chambers is kept as small as possible.

© ISO 2020 – All rights reserved
Documents
Document Sharing Hub
Full document details: BS ISO 1928:2020

3.1.7
aneroid calorimeter
calorimeter system without fluid, where the calorimeter can, stirrer and water are replaced by a metal block and the combustion vessel itself constitutes the calorimeter

Note 1 to entry: Characteristically, these calorimeters have a small heat capacity, leading to large changes in temperature. Therefore, smaller masses of sample are used. A calorimeter of this kind requires more frequent calibrations.

3.1.8
reference temperature
international reference temperature for thermochemistry, 25 °C

Note 1 to entry: See 8.7.

Note 2 to entry: The temperature dependence of the calorific value of coal or coke is small, about 1 J/(g·K).

3.1.9
effective heat capacity of the calorimeter
amount of energy required to cause unit change in temperature of the calorimeter

3.1.10
corrected temperature rise
change in calorimeter temperature caused solely by the processes taking place within the combustion vessel

Note 1 to entry: The change in temperature can be expressed in terms of other units: resistance of a platinum or thermistor thermometer, frequency of a quartz crystal resonator, etc., provided that a functional relationship is established between this quantity and a change in temperature. The effective heat capacity of the calorimeter can be expressed in units of energy per such an arbitrary unit. Criteria for the required linearity and closeness in conditions between calibrations and fuel tests are given in 9.3.

3.2 Symbols

$c_{p,\mathrm{aq}}$	specific heat capacity of water at constant pressure
$c_{p,\mathrm{s}}$	specific heat capacity of the sample
$c_p \mathrm{d}t$	heat capacity times the temperature change
$c_{p,\mathrm{cr}}$	specific heat capacity of the crucible
ΔC	is the difference in heat capacity ($m_{\mathrm{cr}} \times c_{p,\mathrm{cr}}$) of the crucible used in the calibrations and that used in combustion of the fuel
$\frac{\mathrm{d}q}{\mathrm{d}T}$	heat flow into the calorimeter
$(\mathrm{d}t/\mathrm{d}\tau)_{\mathrm{i}}$	the initial drift rate
G	specific rate constant, which is evaluated from the time-temperature measurements of the rating periods, the fore- and the after-period
g	drift rate ($\mathrm{d}t/\mathrm{d}\tau$) in the rating periods
g_{f}	final drift rate (drift rate in the after-period)
g_{i}	initial drift rate (drift rate in the fore-period)
k	is the Newton's law cooling constant

© ISO 2020 – All rights reserved

Documents
Document Sharing Hub
Full document details: BS ISO 1928:2020

l_{wire}	length of ignition wire (fuse)
L	is the latent heat of vaporization of water at 25 °C and constant pressure (43 988 J/mol)
L_s	is the latent heat of vaporization at 25 °C and constant pressure of the water present in the analysis sample and formed from the hydrogen in it
M	moisture in the analysis sample
m_{aq}	mass of combustion vessel water
M_T	total moisture mass fraction of the fuel for which the calculation is required
m_{ba}	mass of benzoic acid
m_{cr}	mass of crucible
m_s	mass of sample
m_{fuse}	mass of wire (fuse)
m_1	mass of fuel sample burned
m_2	mass of combustion aid
p_O	initial pressure of oxygen
P_{st}	power of stirring
Q_{fuse}	contribution from combustion of the fuse
Q_{ign}	contribution from oxidation of the ignition wire
Q_N	contribution from formation of nitric acid (from liquid water and gaseous nitrogen and oxygen)
Q_S	correction for taking the sulfur from the aqueous sulfuric acid in the combustion vessel to gaseous sulfur dioxide
$q_{p,gr,d}$	gross calorific value at constant pressure of the dry (moisture-free) fuel
$q_{p,net,M}$	net calorific value at constant pressure for air-dried fuel with moisture mass fraction
$q_{p,net,d}$	net calorific value at constant pressure of the dry (moisture-free) fuel
q_{p,net,M_T}	net calorific value at constant pressure of the fuel with moisture mass fraction M_T
$q_{V,ba}$	certified gross calorific value at constant volume for benzoic acid
$q_{V,gr}$	gross calorific value at constant volume of the fuel as analysed
$q_{V,gr,d}$	gross calorific value at constant volume of the dry (moisture-free) fuel
$q_{V,gr,m}$	gross calorific value at constant volume of the fuel with moisture mass fraction M_T
$q_{V,net}$	net calorific value at constant volume
$q_{V,net,d}$	net calorific value at constant volume of the dry (moisture-free) fuel
$q_{V,net,M}$	net calorific value at constant volume for air-dried fuel with moisture mass fraction

© ISO 2020 – All rights reserved
Documents
Document Sharing Hub
Full document details: BS ISO 1928:2020

$q_{V,\mathrm{net,M_T}}$	net calorific value at constant volume of the fuel with moisture mass fraction M_T
$q_{V,2}$	gross calorific value at constant volume of a combustion aid
R	the universal gas constant, equal to 8,315 J/mol K
T	the reference temperature for calorific value, i.e. 298,15 K (25 °C)
Δn_g	contraction in volume of the gaseous phase for the combustion reaction, expressed in terms of moles per gram of sample, on an air-dried basis
t	calorimeter temperature
t_1	the correction of 1 applied after the ignition of the sample
Δm_cr	heat capacity from the mass of the crucible
Δt_ex	heat-leak correction, which is the contribution from the heat exchange
t_f	final temperature of the main period (equal to the reference temperature)
τ_a	time, a minutes after the end of the main period
$t_{\mathrm{f}+\tau_a}$	temperature, a minutes after the end of the main period
$t_\mathrm{f} - t_\mathrm{i}$	observed temperature rise
Δt	observed temperature rise
t_i	initial temperature of the main period (at the time of firing the charge)
t_j	thermostat (jacket) temperature
$t_\mathrm{j} - t$	thermal head
t_k	successive temperature readings, taken at 1 min intervals during the main period
t_m	the integrated mean temperature
t_0	is equal to t_i and is the temperature at the beginning of the main period
t_n	is the temperature reading, taken during the main period, at the nth one-minute interval, t_n (= t_f) being the reading taken at the end
t_mf	mean temperature in the after-period
t_mi	mean temperature in the fore-period
t_x	temperature at the time τ_x,
t_∞	is the temperature that the calorimeter eventually attains if left running for an extended period of time, which is the asymptotic temperature of an isoperibol calorimeter (at "infinite" time)
t_ref	reference temperature
V_1	is the volume of the barium hydroxide solution used
V_2	is the volume, of the hydrochloric acid solution used
$V_\mathrm{aq,}$	volume of combustion vessel water, may be substituted, as appropriate, for m_aq

© ISO 2020 – All rights reserved

Documents
Document Sharing Hub
Full document details: BS ISO 1928:2020

V_{cv}	Combustion vessel volume
W_1	The work done against the atmosphere when the water is expanded at constant pressure to vapour at 25 °C
W_2	Δn_g multiplied by RT to interpret the volume change in terms of the associated work done by the atmosphere to maintain constant pressure
w_H	hydrogen mass fraction of the sample less the hydrogen contained in the moisture mass fraction
$w_{H,d}$	hydrogen, mass fraction of the moisture-free fuel (includes the hydrogen from the water of hydration of the mineral matter as well as hydrogen in the coal substance)
$w_{N,d}$	nitrogen, mass fraction of the moisture-free fuel
$w_{O,d}$	oxygen, mass fraction of the moisture-free fuel
w_V	the volatile-matter mass fraction of the sample with moisture mass fraction, M_T
w_A	the ash mass fraction of the sample with moisture mass fraction, M_T
ε	effective heat capacity of the calorimeter
$\hat{\varepsilon}$	best estimate (corresponds to "mean" value) of ε from linear regression of ε as a function of the observed temperature rise ($t_f - t_i$)
ε_*	effective heat capacity of calorimeter on a "total-calorimeter-mass" basis
ε_n	mean effective heat capacity of the calorimeter based on n determinations of ε
ε_0	effective heat capacity of hypothetical calorimeter with no crucible in the combustion vessel
$\varepsilon_{0,n}$	mean effective heat capacity of the calorimeter based on n determinations of ε_0
θ	corrected temperature rise
τ	time
$\Delta\tau$	length of the main period
τ_f	time at the end of the main period
τ_i	time at the beginning of the main period
τ_x	Dickinson extrapolation time

4 Principle

4.1 Gross calorific value

A weighed portion of the general analysis sample of the solid fuel is burned in high-pressure oxygen in a combustion vessel calorimeter under specified conditions. The effective heat capacity of the calorimeter is determined in calibration tests by combustion of certified benzoic acid under similar conditions, accounted for in the certificate. The corrected temperature rise is established from observations of temperature before, during, and after the combustion reaction takes place. The duration and frequency of the temperature observations depend on the type of calorimeter used. Water is added to the combustion vessel initially to give a saturated vapour phase prior to combustion, thereby allowing all the water formed from the hydrogen and moisture in the sample to be regarded as liquid water.

© ISO 2020 – All rights reserved
Documents
Document Sharing Hub
Full document details: BS ISO 1928:2020

The gross calorific value is calculated from the corrected temperature rise and the effective heat capacity of the calorimeter, with allowances made for contributions from ignition energy, combustion of the fuse(s) and for thermal effects from side reactions such as the formation of nitric acid. Furthermore, a correction is applied to account for the difference in energy between the aqueous sulfuric acid formed in the combustion vessel reaction and gaseous sulfur dioxide, i.e. the required reaction product of sulfur in the fuel.

4.2 Net calorific value

The net calorific value at constant volume and the net calorific value at constant pressure of the fuel are obtained by calculation from the gross calorific value at constant volume determined on the analysis sample. The calculation of the net calorific value at constant volume requires information about the moisture and hydrogen mass fractions of the analysis sample. In principle, the calculation of the net calorific value at constant pressure also requires information about the oxygen and nitrogen mass fractions of the sample.

5 Reagents

5.1 Oxygen, at a pressure high enough to fill the combustion vessel to 3 MPa, pure, with an assay of at least 99,5 % volume fraction, and free from combustible matter.

NOTE Oxygen made by the electrolytic process can contain up to 4 % volume fraction of hydrogen.

5.2 Fuse.

5.2.1 Ignition wire, of nickel-chromium 0,16 mm to 0,20 mm in diameter, platinum 0,05 mm to 0,10 mm in diameter, or another suitable conducting wire with well characterized thermal behaviour during combustion.

5.2.2 Cotton fuse, of white cellulose cotton, or equivalent, if required; see 8.2.1, fourth paragraph.

5.3 Crucible lining material, for use in aiding total combustion of coke, anthracite, high ash coal and other less reactive fuels.

5.3.1 Paste, of fused aluminosilicate cement passing a 63 µm test sieve and suitable for use up to a temperature of 1 400 °C, mixed with water.

5.3.2 Aluminium oxide, fused, of analytical reagent quality, passing a 180 µm test sieve and retained on a 106 µm test sieve.

5.3.3 Silica fibre disk, an ash-free, silica-fibre.

5.4 Standard volumetric solutions and **indicators**, only for use when analysis of final combustion vessel solutions is required.

5.4.1 Barium hydroxide solution, $c[Ba(OH)_2]$ = 0,05 mol/l, prepared by dissolving 18 g of barium hydroxide, $Ba(OH)_2 \cdot 8H_2O$, in about 1 l of hot water in a large flask.

Stopper the flask and allow the solution to stand for two days or until all the barium carbonate has completely settled out. Decant or siphon off the clear solution through a fine-grained (slow flowrate) filter paper into a storage bottle fitted with a soda-lime guard tube to prevent ingress of carbon dioxide. Standardize the solution against 0,1 mol/l hydrochloric acid solution (5.4.4) using phenolphthalein solution (5.4.6) as an indicator.

© ISO 2020 – All rights reserved

Documents
Document Sharing Hub
Full document details: BS ISO 1928:2020

5.4.2 Sodium carbonate solution, $c(Na_2CO_3)$ = 0,05 mol/l, prepared by dissolving 5,3 g of anhydrous sodium carbonate, Na_2CO_3, dried for 30 min at 260 °C to 270 °C, but not exceeding 270 °C, in water. Transfer the resulting solution quantitatively to a 1 l volumetric flask and make up to volume with water.

5.4.3 Sodium hydroxide solution, c(NaOH) = 0,1 mol/l, prepared from a standard concentrated volumetric solution as directed by the manufacturer.

Alternatively, prepare from anhydrous sodium hydroxide by dissolving 4,0 g of sodium hydroxide, NaOH, in water; transfer the resulting solution to a 1 l volumetric flask and make up to volume with water.

Standardize the resulting solution against 0,1 mol/l hydrochloric acid solution (5.4.4) using phenolphthalein solution (5.4.6) as an indicator.

5.4.4 Hydrochloric acid solution, c(HCl) = 0,1 mol/l, prepared from a standard concentrated volumetric solution, as directed by the manufacturer.

Alternatively, prepare by diluting 9 ml of hydrochloric acid (ρ = 1,18 g/ml) to 1 l with water. Standardize the resulting solution against anhydrous sodium carbonate or against sodium carbonate solution (5.4.2) using a screened indicator solution (5.4.5).

5.4.5 Methyl orange indicator, screened, 1 g/l solution.

Dissolve 0,25 g of methyl orange and 0,15 g of xylene cyanole FF in 50 ml of 95 % volume fraction ethanol and dilute to 250 ml with water.

5.4.6 Phenolphthalein, 10 g/l solution.

Dissolve 2,5 g of phenolphthalein in 250 ml of 95 % volume fraction ethanol or 2,5 g of the water-soluble salt of phenolphthalein in 250 ml of water.

5.4.7 Water, deionised, distilled or water of equivalent purity, with a specific conductivity not higher than 0,2 mS/m at 25 °C.

5.5 Benzoic acid, of calorimetric-standard quality, certified by a recognized standardizing authority (or with unambiguously traceable certification).

Benzoic acid is the sole substance recommended for calibration of an oxygen-combustion vessel calorimeter. For the purpose of checking the overall reliability of the calorimetric measurements, test substances, e.g. *n*-dodecane, are used. Test substances are used mainly to prove that certain characteristics of a sample, e.g. burning rate or chemical composition, do not introduce bias in the results. A test substance should have a certified purity and a well-established energy of combustion.

The benzoic acid is burned in the form of pellets. The benzoic acid is normally used without drying or any treatment other than pelletizing; consult the sample certificate. The benzoic acid does not absorb moisture from the atmosphere at a relative humidity below 90 %, but it is recommended that the benzoic acid be stored in a moisture-free environment (desiccator) until use.

The benzoic acid shall be used as close to certification conditions as is feasible; significant departures from these conditions shall be accounted for in accordance with the directions in the certificate. The energy of combustion of the benzoic acid, as defined by the certificate for the conditions utilized, shall be adopted in calculating the effective heat capacity of the calorimeter; see 9.2.

© ISO 2020 – All rights reserved
Documents
Document Sharing Hub
Full document details: BS ISO 1928:2020

6 Apparatus

6.1 General

The **calorimeter** (see Figure 1), consists of the assembled combustion vessel, the calorimeter can (with or without a lid), the calorimeter stirrer, water, temperature sensor and leads with connectors inside the calorimeter can required for ignition of the sample or as part of temperature measurement or control circuits. During measurements, the calorimeter is enclosed in a thermostat. The manner in which the thermostat temperature is controlled defines the working principle of the instrument and, hence, the strategy for evaluating the corrected temperature rise.

In aneroid systems (systems without a fluid), the calorimeter can, stirrer and water are replaced by a metal block. The combustion vessel itself constitutes the calorimeter in some aneroid systems.

In combustion calorimetric instruments with a high degree of automation, especially in the evaluation of the results, the calorimeter is, in a few cases, not as well defined as the traditional, classical-type calorimeter. Using such an automated calorimeter is, however, within the scope of this document as long as the basic requirements are met with respect to calibration conditions, comparability between calibration and fuel tests, ratio of sample mass to combustion vessel volume, oxygen pressure, combustion vessel liquid, reference temperature of the measurements and accuracy of the results. A printout of some specified parameters from the individual measurements is essential. Details are given in Annex C.

Equipment, adequate for determinations of calorific value in accordance with this document, is specified below.

6.2 Calorimeter with thermostat.

6.2.1 Combustion vessel, capable of withstanding safely the pressures developed during combustion; see Figure 1.

The design shall permit complete recovery of all liquid products. The material of construction shall resist corrosion by the acids produced in the combustion of coal and coke. A suitable internal volume of the combustion vessel is from 250 ml to 350 ml.

WARNING — Combustion vessel parts shall be inspected regularly for wear and corrosion; particular attention shall be paid to the condition of the threads of the main closure. Manufacturers' instructions and any local regulations regarding the safe handling and use of the combustion vessel shall be observed. When more than one combustion vessel of the same design is used, it is imperative to use each combustion vessel as a complete unit. Colour coding is recommended. Swapping of parts can lead to a serious accident.

© ISO 2020 – All rights reserved

Documents
Document Sharing Hub
Full document details: BS ISO 1928:2020

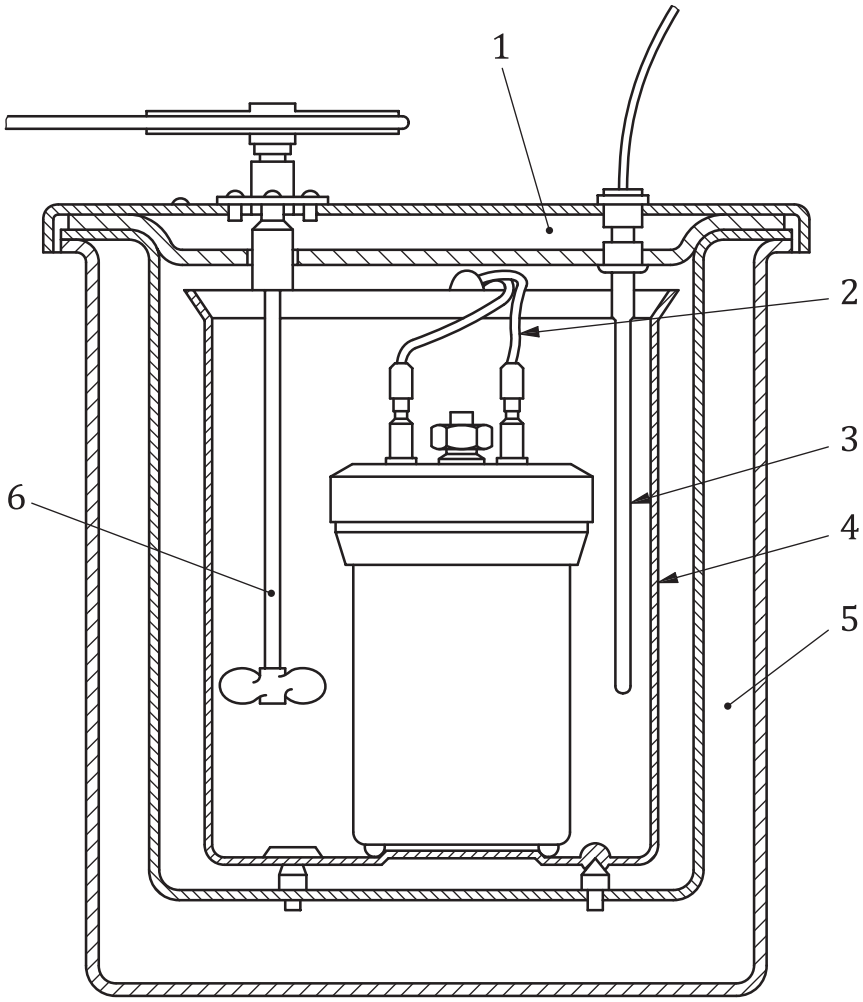

Key

1 thermostat lid
2 ignition leads
3 thermometer
4 calorimeter can
5 thermostat
6 stirrer

Figure 1 — Classical-type combustion-vessel calorimeter with thermostat

6.2.2 Calorimeter can, made of metal, highly polished on the outside and capable of holding an amount of water sufficient to completely cover the flat upper surface of the combustion vessel while the water is being stirred.

A lid generally helps reduce evaporation of calorimeter water but, unless it is in good thermal contact with the can, it lags behind in temperature during combustion, giving rise to undefined heat exchange with the thermostat and a prolonged main period.

6.2.3 Stirrer, working at constant speed.

The stirrer shaft should have a low-heat-conduction and/or a low-mass section below the cover of the surrounding thermostat to minimize transmission of heat to or from the system. This is of particular importance when the stirrer shaft is in direct contact with the stirrer motor. When a lid is used for the calorimeter can, this section of the shaft should be above the lid.

The rate of stirring for a stirred-water-type calorimeter should be large enough to make sure that hot spots do not develop during the rapid part of the change in temperature of the calorimeter. A rate of

© ISO 2020 – All rights reserved
Documents
Document Sharing Hub
Full document details: BS ISO 1928:2020

stirring such that the length of the main period can be limited to 10 min or less is usually adequate; see Annexes A and B.

6.2.4 Thermostat (water jacket), completely surrounding the calorimeter, with an air gap of approximately 10 mm separating calorimeter and thermostat.

The mass of water of a thermostat intended for isothermal operation shall be sufficiently large to outbalance thermal disturbances from the outside. The temperature should be controlled to within ±0,1 K or better throughout the test. A passive constant temperature ("static") thermostat shall have a heat capacity large enough to restrict the change in temperature of its water. Criteria for satisfactory behaviour of this type of water jacket are given in Annex B.

NOTE 1 For an insulated metal static jacket, satisfactory properties are usually ensured by making a wide annular jacket with a capacity for water of at least 12,5 l.

NOTE 2 Calorimeters surrounded by insulating material, creating a thermal barrier, are regarded as static-jacket calorimeters.

When the thermostat (water jacket) is required to follow closely the temperature of the calorimeter, it should be of low mass and preferably have immersion heaters. Energy shall be supplied at a rate sufficient to maintain the temperature of the water in the thermostat to within 0,1 K of that of the calorimeter water after the charge has been fired. When in a steady state at 25 °C, the calculated mean drift in temperature of the calorimeter shall not exceed 0,000 5 K/min; see A.3.2.

6.2.5 Temperature-measuring instrument, capable of indicating temperature with a resolution of at least 0,001 K so that temperature intervals of 2 K to 3 K can be determined with a resolution of 0,002 K or better.

The absolute temperature shall be known to the nearest 0,1 K at the reference temperature of the calorimetric measurements. The temperature-measuring device should be linear, or linearized, in its response to changes in temperature over the interval it is used.

As alternatives to the traditional mercury-in-glass thermometers, suitable temperature sensors are platinum-resistance thermometers, thermistors, quartz crystal resonators, etc., which, together with a suitable resistance bridge, null detector, frequency counter, or other electronic equipment, provide the required resolution. The short-term repeatability of this type of device shall be 0,001 K or better. Long-term drift shall not exceed the equivalent of 0,05 K for a period of six months. Sensors with linear response (in terms of temperature) are less likely to drift, causing bias in the calorimetric measurements, than are non-linear sensors.

For adiabatic systems, a suitable arrangement is as follows: Mercury-in-glass thermometers in accordance with ISO 651, ISO 652, ISO 1770 or ISO 1771 shall satisfy the measurement requirements. A viewer with magnification about 5x is needed for reading the temperature with the resolution required.

Also, a mechanical vibrator to tap the thermometer is suitable for preventing the mercury column from sticking; see 8.4. If this is not available, the thermometer can be tapped manually before reading the temperature.

6.2.6 Ignition circuit.

The electrical supply shall be 6 V to 25 V alternating current from a step-down transformer or direct current. It is desirable to include a pilot light in the circuit to indicate when current is flowing.

Where the firing is done manually, the firing switch shall be of the spring-loaded, normally open type, located in such a manner that any undue risk to the operator is avoided; see warning in 8.4.

6.3 Crucible, of silica, nickel-chromium, platinum or similar unreactive material, supplied by the instrument manufacturer.

For coal, the crucible should be about 25 mm in diameter, flat-based and not more than 30 mm deep.

© ISO 2020 – All rights reserved

AVA Documents Document Sharing Hub
Full document details: BS ISO 1928:2020

Silica crucibles should be about 1,5 mm thick and metal crucibles about 0,5 mm thick. The crucible should be lined with an ash-free, silica-fibre disk for coke, anthracite, high-ash coal and other less reactive fuels. A crucible of nickel-chromium foil about 0,25 mm thick is recommended when testing high-ash coals, in order to reduce any error from incomplete combustion.

For coke, the nickel-chromium crucible, as described for use with coal, should be lined with a commercially produced ash-free, silica-fibre disk. The mass of the silica-fibre disk is not included as part of the sample mass. Alternatively, line the crucible with a paste of fused aluminosilicate cement (5.3.1). After drying at 50 °C to 60 °C, the excess cement shall be scraped off to leave a smooth lining about 1,5 mm thick; the crucible shall then be incinerated at 1 000 °C for 2 h. Before use, 0,3 g of aluminium oxide (5.3.2) shall be spread over the base of the lined crucible and compacted with the flat end of a metal rod.

For other substances with a high moisture mass fraction, such as bio-oils, the ashless silica-fibre disk is placed on top of the sample in the crucible. This helps to absorb the moisture, and easy burning occurs without misfires.

For benzoic acid, either of the crucibles specified for coal is suitable. However, the crucible type used for calibration, should also be used for the test sample, as any significant change in crucible mass will impact on the calibration of the instrument i.e. heat capacity. If smears of unburned carbon occur, a small, platinum or nickel-chromium crucible, for example 0,25 mm thick, 15 mm in diameter and 7 mm deep, may be used.

6.4 Ancillary pressure equipment.

6.4.1 Pressure regulator, to control the filling of the combustion vessel with oxygen.

6.4.2 Pressure gauge (e.g. 0 MPa to 5 MPa), to indicate the pressure in the combustion vessel with a resolution of 0,05 MPa.

6.4.3 Relief valve or **bursting disk**, operating at 3,5 MPa, and installed in the filling line, to prevent overfilling the combustion vessel.

CAUTION — Equipment for high-pressure oxygen shall be kept free from oil and grease. Do not test or calibrate the pressure gauge with hydrocarbon fluid.

6.5 Timer, indicating minutes and seconds.

6.6 Balances.

6.6.1 Balance, capable of weighing the sample, fuse, etc., with a resolution of at least 0,1 mg; 0,01 mg is preferable and is recommended when the sample mass is of the order of 0,5 g or less; see 8.2.1.

6.6.2 Balance, capable of weighing the calorimeter water, with a resolution of 0,5 g (unless water can be dispensed into the calorimeter by volume with the required accuracy); see 8.3.

6.7 Thermostat (optional), for equilibrating the calorimeter water before each test to a predetermined initial temperature, within about ±0,3 K.

7 Preparation of test sample

The coal and coke used for the determination of the calorific value shall be the general analysis sample ground to pass a test sieve with an aperture of 212 µm and shall be prepared in accordance with ISO 13909-4 and ISO 18283. In some circumstances, it has been shown that a maximum particle size of 250 µm is acceptable for low- and medium-rank coals.

© ISO 2020 – All rights reserved
Documents
Document Sharing Hub
Full document details: BS ISO 1928:2020

The sample shall be well mixed and in reasonable moisture equilibrium with the laboratory atmosphere. Either the moisture mass fraction shall be determined on samples weighed within a few hours of the time that samples are weighed for the determination of calorific value, or the sample shall be kept in a small, effectively closed container until moisture analyses are performed, to allow appropriate corrections for moisture in the analysis sample.

Determination of the moisture mass fraction of the analysis sample shall be carried out in accordance with one of the methods specified in ISO 687, ISO 11722 or ISO 5068-2.

NOTE Coal samples from organic float-and-sink testing can contain halogen compounds, which can affect the determination of gross calorific value due to the heat of formation of acids. It is necessary to take care to remove as much of the traces of these residues as is practicable before the determination is carried out.

8 Calorimetric procedure

8.1 General

The calorimetric determination consists of two separate tests: combustion of the calibrant (benzoic acid) and combustion of the fuel (coal or coke), both under specified conditions. The calorimetric procedure for the two types of tests is essentially the same. In fact, the overall similarity is a requirement for proper cancellation of systematic errors caused, for example, by uncontrolled heat leaks not accounted for in the evaluation of the corrected temperature rise, θ.

The test consists of carrying out quantitatively a combustion reaction (in high-pressure oxygen in the combustion vessel) to defined products of combustion and of measuring the change in temperature caused by the total combustion process.

The temperature measurements required for the evaluation of the corrected temperature rise, θ, are made during a fore-period, a main (equals the "reaction") period and an after-period, as outlined in Figure 2. For the adiabatic-type calorimeter, the fore- and after-periods, in principle, should be only as long as required to establish the initial (firing) and final temperatures, respectively; see Annex A. For the isoperibol (isothermal jacket) and the static-jacket-type calorimeters, the fore- and after-periods serve to establish the heat-exchange properties of the calorimeter required to allow proper correction for heat exchange between calorimeter and thermostat during the main period when combustion takes place. It is then necessary for the fore- and after-periods to be longer; see Annex B.

The power of stirring shall be maintained constant throughout a test that calls for a constant rate of stirring. An excessive rate of stirring results in an undesirable increase in the power of stirring with ensuing difficulties in keeping it constant. A wobbling stirrer is likely to cause significant short-term variations in stirring power.

© ISO 2020 – All rights reserved

Documents
Document Sharing Hub
Full document details: BS ISO 1928:2020

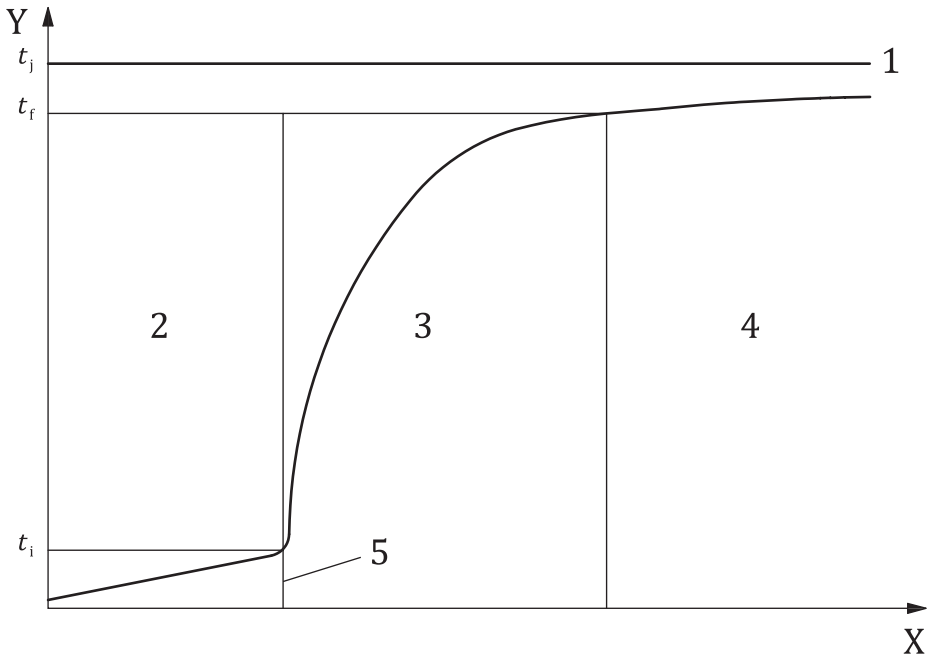

Key

X	time	4	after period
Y	temperature	5	ignition
1	jacket temperature	t_i	initial temperature of the main period
2	fore period	t_j	is the jacket temperature
3	main period	t_f	final temperature of the main period (equal to the reference temperature)

Figure 2 — Time-temperature curve — Isoperibol calorimeter

During combustion, the combustion vessel head becomes appreciably hotter than other parts of the combustion vessel, and it is important to have enough well stirred water above it to maintain a reasonably small temperature gradient in the calorimeter water during the rapid part of the rise in temperature. For aneroid systems, the particular design determines to what extent hot spots may develop; see Annex C.

Certain less reactive fuels may persistently leave residues that contain significant amounts of unburned sample or soot. By mixing these samples with known amounts of an auxiliary material, complete combustions can, in most instances, be achieved. Wrapping samples in tissue or rice paper, in addition to providing a combustion aid, gives an opportunity to affect the configuration of the sample in the crucible at the moment of ignition.

The auxiliary material shall be chemically stable, have a low vapour pressure and a well-established energy of combustion. The energy should be known to within 0,10 % for the particular material used. Benzoic acid appears to be the ideal compound, even though *n*-dodecane or paraffin oil, for example, being liquids, are easier to distribute evenly. The amount used should be limited to the minimum amount required to achieve complete combustion of the sample. The amount used should not exceed an amount that contributes half the total energy in a test. The optimum proportion of sample to auxiliary material depends on the properties of the fuel, and it is necessary that it be determined experimentally.

For coals having ash values exceeding approximately 35 %, there is a possibility of incomplete combustion, and a sufficient, known mass of auxiliary material should be added to ensure a temperature rise similar to that obtained in benzoic acid calibrations.

When the auxiliary material is a liquid, it can wet the sample more thoroughly if it is added to the crucible before the fuel sample.

© ISO 2020 – All rights reserved
Documents
Document Sharing Hub
Full document details: BS ISO 1928:2020