BS ISO 19283:2020

BSI Standards Publication

Condition monitoring and diagnostics of machines — Hydroelectric generating units

Documents
Document Sharing Hub

Full document details: BS ISO 19283:2020

National foreword

This British Standard is the UK implementation of ISO 19283:2020.

The UK participation in its preparation was entrusted to Technical Committee GME/21/7, Mechanical vibration, shock and condition monitoring - Condition monitoring.

A list of organizations represented on this committee can be obtained on request to its secretary.

This publication does not purport to include all the necessary provisions of a contract. Users are responsible for its correct application.

© The British Standards Institution 2020
Published by BSI Standards Limited 2020

ISBN 978 0 580 51710 5

ICS 17.160; 27.140

Compliance with a British Standard cannot confer immunity from legal obligations.

This British Standard was published under the authority of the Standards Policy and Strategy Committee on 30 April 2020.

Amendments/corrigenda issued since publication

Date	Text affected

Documents
Document Sharing Hub

Full document details: BS ISO 19283:2020

INTERNATIONAL STANDARD

ISO 19283

First edition
2020-04

Condition monitoring and diagnostics of machines — Hydroelectric generating units

Surveillance et diagnostic d'état des machines — Groupes de production hydroélectrique

Reference number
ISO 19283:2020(E)

Documents
Document Sharing Hub

© ISO 2020

Full document details: BS ISO 19283:2020

COPYRIGHT PROTECTED DOCUMENT

© ISO 2020

All rights reserved. Unless otherwise specified, or required in the context of its implementation, no part of this publication may be reproduced or utilized otherwise in any form or by any means, electronic or mechanical, including photocopying, or posting on the internet or an intranet, without prior written permission. Permission can be requested from either ISO at the address below or ISO's member body in the country of the requester.

ISO copyright office
CP 401 • Ch. de Blandonnet 8
CH-1214 Vernier, Geneva
Phone: +41 22 749 01 11
Fax: +41 22 749 09 47
Email: copyright@iso.org
Website: www.iso.org

Published in Switzerland

© ISO 2020 – All rights reserved

Documents
Document Sharing Hub

Full document details: BS ISO 19283:2020

Contents

Page

Foreword ... **iv**
Introduction ... **v**
1 Scope ... **1**
2 Normative references ... **1**
3 Terms and definitions ... **1**
4 Symbols and abbreviated terms ... **2**
5 Initial preparations for condition monitoring ... **3**
6 Failure modes of hydro unit components ... **4**
6.1 General ... 4
6.2 Hydro unit components ... 4
6.3 Potential failure mode identification and prioritization ... 4
7 Monitoring and diagnostic techniques ... **5**
7.1 General ... 5
7.2 Condition monitoring techniques overview ... 5
7.3 Primary descriptors and plots ... 7
7.4 Correlation measurements ... 7
7.5 Adaptive monitoring strategy ... 8
7.6 Monitoring and diagnostic technique selection and evaluation ... 8
8 Implementing, operating and maintaining a monitoring solution ... **9**
8.1 General ... 9
8.2 Sensor selection and installation ... 9
8.3 Condition monitoring system evaluation and selection ... 10
8.4 Daily operation of the monitoring system ... 10
Annex A (informative) **Machine components and failure modes** ... **12**
Annex B (informative) **Monitoring techniques for hydro unit components and failure modes** ... **19**
Annex C (informative) **Primary monitoring and diagnostic techniques** ... **26**
Annex D (informative) **Evaluation of monitoring techniques** ... **59**
Bibliography ... **61**

© ISO 2020 – All rights reserved

Documents
Document Sharing Hub
Full document details: BS ISO 19283:2020

Foreword

ISO (the International Organization for Standardization) is a worldwide federation of national standards bodies (ISO member bodies). The work of preparing International Standards is normally carried out through ISO technical committees. Each member body interested in a subject for which a technical committee has been established has the right to be represented on that committee. International organizations, governmental and non-governmental, in liaison with ISO, also take part in the work. ISO collaborates closely with the International Electrotechnical Commission (IEC) on all matters of electrotechnical standardization.

The procedures used to develop this document and those intended for its further maintenance are described in the ISO/IEC Directives, Part 1. In particular, the different approval criteria needed for the different types of ISO documents should be noted. This document was drafted in accordance with the editorial rules of the ISO/IEC Directives, Part 2 (see www.iso.org/directives).

Attention is drawn to the possibility that some of the elements of this document may be the subject of patent rights. ISO shall not be held responsible for identifying any or all such patent rights. Details of any patent rights identified during the development of the document will be in the Introduction and/or on the ISO list of patent declarations received (see www.iso.org/patents).

Any trade name used in this document is information given for the convenience of users and does not constitute an endorsement.

For an explanation of the voluntary nature of standards, the meaning of ISO specific terms and expressions related to conformity assessment, as well as information about ISO's adherence to the World Trade Organization (WTO) principles in the Technical Barriers to Trade (TBT) see www.iso.org/iso/foreword.html.

This document was prepared by Technical Committee ISO/TC 108, *Mechanical vibration, shock and condition monitoring*, Subcommittee SC 5, *Condition monitoring and diagnostics of machine systems*.

Any feedback or questions on this document should be directed to the user's national standards body. A complete listing of these bodies can be found at www.iso.org/members.html.

© ISO 2020 – All rights reserved
Documents
Document Sharing Hub
Full document details: BS ISO 19283:2020

Introduction

Traditionally, hydroelectric generating units (or simply hydro units) have been overdesigned, well-staffed for maintenance and often continuously operated at only baseload conditions over a period of many years. As a result of this, there were few maintenance issues, shutdowns could be planned at fixed intervals, and therefore there was little need for condition monitoring of the units. Simple machine protection systems sufficed, if used at all.

Nowadays, there are more stringent requirements for operational regimes, availability and reliability. Disruption to consumers' needs should be minimized and cash generation for the utilities maximized. The operating regimes for many hydro units have been extended to include synchronous compensation, load-following and peaking, which means there are many starts and stops and partial load operation, sometimes in the rough zones. Many applications are based on pump storage. Moreover, new units are designed more streamlined to the application, less robust, and older units are often refurbished to extend life or to increase rating. This means that machines are more stressed, which can lead to premature or unpredictable failure of the components, and even some new failure modes. At the same time, there is a trend towards fewer maintenance staff and specialists to look after the machines.

Therefore, there is a significantly greater need for an effective condition monitoring strategy, not just a protection system. Moreover, the condition monitoring solution of these machines should be more than just basic vibration monitoring. Due to the complex nature of the hydro unit components, a number of potential failure modes now become apparent under the current stressful conditions, which require a number of different, specialized monitoring techniques and diagnostic expertise. There are few standards for monitoring the hydro units and a general lack of understanding of the monitoring techniques. Even for hydropower stations that have a legacy condition monitoring system installed, the existing condition monitoring requirements for the hydro units are sometimes no longer valid as a result of changing operating conditions or refurbishment of the units.

© ISO 2020 – All rights reserved

Documents
Document Sharing Hub
Full document details: BS ISO 19283:2020

Documents
Document Sharing Hub

Condition monitoring and diagnostics of machines — Hydroelectric generating units

1 Scope

This document focuses on recommended condition monitoring techniques for detecting and diagnosing developing machine faults associated with the most common potential failure modes for hydro unit components. It is intended to improve the reliability of implementing an effective condition monitoring approach for hydroelectric generating units (hydro units). It is also intended to help create a mutual understanding of the criteria for successful hydro unit condition monitoring and to foster cooperation between the various hydropower stakeholders.

This document is intended for end-users, contractors, consultants, service providers, machine manufacturers and instrument suppliers.

This document is machine-specific and is focused on the generator, shaft/bearing assembly, runner (and impeller for pumped storage applications), penstock (including the main inlet valve), spiral case and the upper draft tube of hydro units. It is primarily intended for medium to large sized hydro units with more than 50 MVA installed capacity, but it is equally valid for smaller units in many cases. It is applicable to various types of turbines such as Francis, Kaplan, Pelton, Bulb and other types. Generic auxiliary systems such as for lubrication and cooling are outside the scope, with the exception of some monitoring techniques that are related to condition monitoring of major systems covered by this document, such as oil analysis. Transmission systems, civil works and the foundation are outside the scope.

This document covers online (permanently installed) and portable instrument condition monitoring and diagnostic techniques for operational hydro units. Offline machine testing, i.e. that which is only done during shutdown, although very important, is not part of the scope of this document. Nor is one-time acceptance and performance testing within the scope. The condition monitoring techniques presented in this document cover a wide range of continuous and interval-based monitoring techniques under generalized conditions for a wide range of applications. Therefore, the actual monitoring approach required for a specific application can be different than that which is recommended in this generalized document.

2 Normative references

There are no normative references in this document.

3 Terms and definitions

For the purposes of this document, the following terms and definitions apply.

ISO and IEC maintain terminological databases for use in standardization at the following addresses:

— ISO Online browsing platform: available at https://www.iso.org/obp

— IEC Electropedia: available at http://www.electropedia.org/

3.1
hydro unit
entire hydro-generating unit, consisting of the generator, shaft, turbine, and including the immediate intake and discharge components, e.g. the penstock, main inlet valve, spiral case and the upper portion of the draft tube

© ISO 2020 – All rights reserved

Documents
Document Sharing Hub
Full document details: BS ISO 19283:2020

3.2
machine state
operational process or duty cycle of the *hydro unit* (3.1)

EXAMPLE Running up to speed, synchronized but no load, partial load, full load, coasting down, stopped.

3.3
monitoring technique
measurement or set of descriptors used to detect a *potential failure mode* (3.4) or provide diagnostic information on the type of fault and its location and severity

3.4
potential failure mode
change of condition of a *hydro unit* (3.1) component that can be detected by measurements that indicate an incipient fault is developing, which will eventually lead to failure

3.5
runner
turbine
hydro unit (3.1) turbine

Note 1 to entry: The terms are used interchangeably throughout the text.

3.6
tacho
phase/speed reference sensor, with at least one pulse generated per revolution

Note 1 to entry: The sensor may be a displacement sensor or an optical sensor with TTL or NPN/PNP signal output.

4 Symbols and abbreviated terms

For the purposes of this document, the following symbols and abbreviated terms apply.

AC	Alternating current
AG	Air gap
CM	Condition monitoring
DC	Direct current
DCS	Distributed control system
EMI	Electromagnetic interference
EWV	End winding vibration
FFT	Fast Fourier transform
FOA	Fibre optic accelerometer
MF	Magnetic flux
NPN	Negative-positive-negative pulse (e.g. output signal from a tacho sensor)
N_S	Specific speed, which is a design criterion for sizing a turbine to a specific flow and head
PD, PDA	Partial discharge, partial discharge analysis
PNP	Positive-negative-positive pulse (e.g. output signal from a tacho sensor)

© ISO 2020 – All rights reserved
Documents
Document Sharing Hub
Full document details: BS ISO 19283:2020

RFI	Radio-frequency interference (electromagnetic interference within the radio frequency band)
RSI	Rotor-stator interaction (e.g. forces)
RTD	Resistance temperature detector
RTU	Remote terminal unit
SCADA	Supervisory control and data acquisition system
S_{max}	Maximum peak displacement for 2-channel shaft vibration according to ISO 20816-5
SNL	Operating condition of the hydro unit where the rotor is turning at synchronized speed but not under load (i.e. speed-no-load)
$S_{P\text{-}P}$	Maximum peak-to-peak displacement value of the two individual shaft vibration channels according to ISO 20816-5
TCP/IP	Transmission control protocol/Internet protocol
TTL	Transistor-transistor logic pulse (e.g. output signal from a tacho sensor)

5 Initial preparations for condition monitoring

Implementing an optimal machine condition-based monitoring strategy for hydro units involves several steps, all of which should be considered in order to maximize machine production, reliability and efficiency and minimize the life cycle costs of the machine. These initial steps, which are beyond the scope of this document, are generalized in ISO 17359 and include evaluating:

— cost benefit analysis of the machine for monitoring;

— machine maintenance history and potential failure modes;

— reliability requirements and criticality audit;

— lead-time-to-maintenance requirements.

After the condition monitoring strategy has been implemented, it should be periodically reviewed and refined as experience is gained and monitoring technology improves.

If a condition monitoring system is already in use, the monitoring and diagnostic functionality of that system may have to be re-evaluated from time to time in order to fulfil current condition monitoring strategy requirements, as described above.

The entire process of implementing a condition-based monitoring strategy is summarized in Table 1, which is in part based on ISO 13379-1:2012, Figure 1.

Table 1 — Implementation of a condition-based monitoring solution for hydro units

CM implementation	Activity	Remarks
CM strategy	CM implementation overview	Described in ISO 17359
	Cost benefits and risk analysis	Partly described in IEC 60300-3-3, IEC 60812, ISO 13379 (series)
CM application	Failure modes, monitoring techniques, descriptors	See Table 2 for a list of standards for specific hydro unit monitoring techniques
NOTE Condition monitoring implementation activities not covered in this document are shaded in grey.		

© ISO 2020 – All rights reserved

Documents
Document Sharing Hub
Full document details: BS ISO 19283:2020

Table 1 *(continued)*

CM implementation	Activity	Remarks
CM system	Data processing, measurement systems, data management	Partly described in ISO 13374-1, ISO 13374-2, ISO 13374-3
	Sensors	Partly described in this document
CM operations	Detection, diagnostics	Partly described in this document
	Root cause analysis, prognostics	Standards currently under development
NOTE Condition monitoring implementation activities not covered in this document are shaded in grey.		

6 Failure modes of hydro unit components

6.1 General

The implementation of an effective condition monitoring and diagnostics approach for hydro units is directly related to the relevant potential failure modes that can occur on specific machine components. Failure means the component is no longer able to serve its intended function.

6.2 Hydro unit components

The potential failure modes considered in this document are limited to the hydro unit itself, which consists of:

— generator and exciter;

— shaft and bearing assembly;

— penstock (including the main inlet valve), spiral case, stay vanes, guide vanes, wicket gate and injectors;

— runner (and impeller for a pumped storage application);

— draft tube.

A more detailed description of the hydro unit components together with the associated terminology can be found in A.2.

6.3 Potential failure mode identification and prioritization

The actual potential failure modes for a specific application are normally identified and prioritized by reliability and risk analysis methods such as failure mode effects analysis (FMEA), failure modes effects and criticality analysis (FMECA), fault tree analysis (FTA) and other methods (these are partly covered by the standards summarized under CM Strategy in Table 1). The actual method that is most suitable for identifying and prioritizing potential failure modes depends on the user application and requirements. Most of these methods take into account a number of factors directly related to the hydro units themselves, such as:

— original machine design and construction;

— machine refurbishment and modifications;

— maintenance history;

— environmental factors;

— how the machine is maintained and operated;

— condition monitoring and diagnostic expertise.

© ISO 2020 – All rights reserved
Documents
Document Sharing Hub
Full document details: BS ISO 19283:2020

There exist many potential failure modes for hydro units, some of which can be detected and diagnosed relatively easily, some with more difficulty and some not at all. This document focuses on the potential failure modes listed in A.3, which are generalized for a wide range of applications and machine types, and which can be monitored and diagnosed using the techniques described in Annex C. As the hydro unit design and its operation and maintenance regime can be very different from one application to the next, it is important to highlight that the failure modes described in this document can be different from those of the actual user's application.

7 Monitoring and diagnostic techniques

7.1 General

Monitoring and diagnostic techniques have been developed and refined over the years to detect, identify and evaluate the severity of one or more symptoms of specific potential failure modes before they occur and with sufficient lead-time such that maintenance can be planned ahead of time and production can continue as intended.

7.2 Condition monitoring techniques overview

A summary of the most common monitoring techniques is listed in Table 2, which includes a reference to relevant standards for these techniques. A graphical summary is shown in B.2. More information on the most relevant monitoring techniques together with their corresponding failure modes is provided in B.3. A detailed description for each individual monitoring technique covered by this document is given in Annex C.

There are a number of important monitoring techniques that are currently being measured on hydro units but they do not appear in Table 2. This is the case for operational process parameters, which are normally not part of a condition monitoring system. These measurements, however, play an important role in condition monitoring of hydro units for correlation purposes as described in 7.4, therefore, they need to be saved with a sufficient resolution in value and time.

Some condition monitoring techniques have been successfully used in the past or are currently being used for detecting and diagnosing certain potential failure modes in hydro units but are not listed in Table 2. This is because these techniques are:

— not widely used, so there is insufficient knowledge of the techniques,

— relatively new and there is not enough experience to deem the techniques as "tried and proven",

— very resource intensive, e.g. success with the technique is highly dependent on user expertise that few have,

— relatively old and have since been replaced by newer proven techniques,

— successfully used in other machine types but have a very limited scope of application for hydro units.

Some of the condition monitoring techniques not listed in Table 2 include:

— **Stator bar vibration** – Bar looseness is often found by offline wedge-tightness testing, and thus is not widely used for online monitoring (described briefly in IEEE 1129). This technique is possibly being replaced by the partial discharge analysis and stator end winding vibration with an FOA on the top of the stator bar;

— **Sediment monitoring** – Sediment erosion and abrasion can affect all types of turbines, but most significantly Pelton turbines;

— **Stator core vibration for rotor deformation monitoring** – In addition to the normal purpose for stator core vibration monitoring, as listed in Table 2, investigations are being developed to use this technique to also detect rotor geometric faults;

© ISO 2020 – All rights reserved

Documents
Document Sharing Hub
Full document details: BS ISO 19283:2020

— **Cavitation monitoring** – There are techniques other than vibration and performance for detecting and monitoring cavitation, such as ultrasound and acoustic techniques;

— **Rotor winding temperature** – Telemetric systems are now available but they are not widely used at present and, thus, there is little experience.

Table 2 — Partial listing of monitoring techniques for hydro unit components

Primary component	Monitoring technique	Description clause	Relevant standards (referenced in the Bibliography)
Generator	Air gap	C.2	IEEE 1129 (briefly mentioned) ISO 20816-5 (briefly mentioned)
	Magnetic flux	C.3	IEEE 1129 (briefly mentioned)
	Partial discharge analysis	C.4	IEEE 1129, IEC/TS 60034-27
	Vibration for stator frame and core, temperature for core, circuit ring, cooling system and winding and voltage for slip ring/brush gear	C.5	IEEE 1129, ISO 13373-7
	Stator end winding vibration	C.6	IEEE 1129, IEC/TS 60034-32
Shaft and bearing assembly	Shaft current and voltage	C.7	IEEE 112, IEEE 115, IEEE 1129
	Oil analysis	C.8	Many standards available such as ASTM D5185 for wear debris analysis and ASTM D6304, ASTM D2896, ASTM D445 for oil condition. Other standards under development.
	Shaft, guide bearing, thrust bearing and bearing housing vibration	C.9	ISO 13373-7, ISO 20816-5, IEEE 1129
	Guide bearing and thrust bearing temperature	C.10	IEEE 1129[a], ISO 13373-7[b]
	Main shaft seal leak monitoring	C.11	
Penstock (including the main inlet valve), spiral case, bulb casing, stay vanes, guide vanes, wicket gate and injectors (Pelton)	Wicket gate shear pin vibration	C.12	ISO 13373-7
	Bulb casing vibration	C.13	
	Stay vanes, guide vane performance monitoring	C.17	IEC 60041
	Injector vibration monitoring	C.9	
	Cavitation and hydraulic disturbance monitoring	C.18	
	Penstock pressure and vibration monitoring (including the main inlet valve)	C.19	
	Pelton runner synchronization monitoring	Table C.14	

[a] This is described for the upper and lower generator bearings only.

[b] Guide bearing temperature is not covered in ISO 13373-7.

[c] This technique is also described in ISO 13373-7 but with a different method.

[d] Pressure is not covered in ISO 13373-7.

NOTE Condition monitoring techniques not completely covered by this document are shown in grey.

© ISO 2020 – All rights reserved
Documents Document Sharing Hub
Full document details: BS ISO 19283:2020

Table 2 *(continued)*

Primary component	Monitoring technique	Description clause	Relevant standards (referenced in the Bibliography)
Turbine	Blade clearance (Kaplan and bulb turbines)	C.14	
	Labyrinth seal clearance and temperature (Francis turbines)	C.15	ISO 13373-7[c]
	Francis turbine cover for axial vibration	C.16	ISO 13373-7
	Performance monitoring (efficiency, head and flow)	C.17	IEC 60041
	Cavitation and hydraulic disturbance monitoring	C.18	
Draft tube	Cavitation and hydraulic disturbance monitoring	C.18	
	Draft tube pressure and vibration monitoring	C.20	ISO 13373-7[d]

[a] This is described for the upper and lower generator bearings only.

[b] Guide bearing temperature is not covered in ISO 13373-7.

[c] This technique is also described in ISO 13373-7 but with a different method.

[d] Pressure is not covered in ISO 13373-7.

NOTE Condition monitoring techniques not completely covered by this document are shown in grey.

7.3 Primary descriptors and plots

Each monitoring and diagnostic technique for hydro units is composed of one or more detection and diagnostic measurements, called descriptors, which can be monitored to alarm limits and viewed in plots. The descriptors and plots, which can vary from one monitoring system supplier to another, can be fixed with regards to the configuration parameters or can be user adjustable so they can be set up to a specific application or fine-tuned as experience is gained. The descriptors and plots recommended in this document are considered the most relevant for a wide range of applications and machine types, and are based on time-proven experience and best practices.

Table 3 — Descriptors and plots for hydro unit monitoring techniques

Monitoring technique	Descriptors and plots description clause	Monitoring system requirements clause
Air gap (AG)	C.2.3	C.2.4
Magnetic flux (MF)	C.3.3	C.3.4
Partial discharge analysis (PDA)	C.4.3	C.4.4
Stator end winding vibration (EWV)	C.6.3	C.6.4
Blade clearance (Kaplan and bulb turbines)	C.14.3	C.14.4
Labyrinth seal clearance and temperature (Francis turbines)	C.15.3	C.15.4
Performance monitoring	C.17.3	C.17.4

7.4 Correlation measurements

The primary descriptors listed in Table 3 are often viewed in plots together with corresponding process measurements to better understand the primary descriptor response to specific operating conditions. This makes it easier to compare similar data when analysing fault symptoms and to define alarm limits with regards to an adaptive monitoring strategy as described in 7.5. Typical measurements used for correlation can be other primary descriptors or those specifically related to the process. These include but are not limited to:

— active, reactive power and power factor (e.g. measured by wattmeter or calculated from voltage and current transformers values multiplied by the power factor plus losses);

© ISO 2020 – All rights reserved

Documents
Document Sharing Hub
Full document details: BS ISO 19283:2020

— speed and phase;

— excitation voltage and current (including voltage drop across excitation system field brushes);

— temperature (such as for oil, water, bearings, windings, cooling air and stator core). Sometimes the temperature is also monitored on the stator pressure plates/fingers, stator end-winding overhang support and stator circuit ring;

— pressure (oil, water, cooling air);

— flow (water, cooling air);

— humidity;

— vibration;

— performance parameters (e.g. water level, flow, water temperature);

— machine signals (e.g. synchronization, pumping, guide vane position).

Correlated measurements serve a critical purpose in those situations where the primary measurements are not very reliable. Moreover, there should be a sufficiently high sampling rate for these types of measurements for proper correlation.

7.5 Adaptive monitoring strategy

Many hydro units run under several operating conditions, so the signal response of the various descriptors of the monitoring techniques can also vary. For automatic early fault detection, the alarm limits should be individually set for each operating condition, based on experience. Process measurements that are typically used for defining individual operating classes can be any of those listed in 7.4 but are often speed, active power, power factor and machine binary signals (e.g. on, off, such as automatic generation control signals and power system stabilizers). There are two major types of operating regimes for hydro units; steady-state and transient. Most of the operating time is spent in steady-state operating classes, which includes:

— full load synchronized generation;

— pumping (for pumped storage);

— partial load synchronized generation;

— no load synchronized (condenser mode for grid stabilization);

— stopped.

Transient regimes include run-up and coast down. Several monitoring and diagnostic techniques, such as vibration monitoring, can be performed during transient conditions to detect or confirm certain potential failure modes that are not readily seen during steady-state conditions.

NOTE Not all descriptors can be monitored in all machine operating modes. A detailed description of some of the descriptors for each monitoring technique is given in Annex C.

7.6 Monitoring and diagnostic technique selection and evaluation

There are a number of techniques available for the monitoring and diagnostics of hydro units but the value each one delivers to the user highly depends on the application and the user requirements. A monitoring and diagnostic technique that is useful for one user can be totally unsuitable for another with similar machines. A simple weighted average method, as described in Annex D, can be used for evaluating similar monitoring and diagnostic techniques from various suppliers or for different

© ISO 2020 – All rights reserved
Documents
Document Sharing Hub
Full document details: BS ISO 19283:2020

monitoring techniques for a specific potential failure mode. The criteria used for evaluating the different techniques can include the following:

— reliability, accuracy and repeatability of the technique;

— detection lead-time to maintenance;

— equipment cost of sensors, signal processing and display;

— ease of installation;

— maintainability and calibration of monitoring equipment;

— diagnostic expertise needed.

NOTE The method described in Annex D is only intended to supplement the relevant cost benefit and risk analysis processes, not replace them.

8 Implementing, operating and maintaining a monitoring solution

8.1 General

The monitoring and diagnostic techniques selected in Clause 7 require a condition monitoring system to process the incoming signals that are indicative of the condition of the machine and deliver actionable information to the relevant operators and other systems for display or further processing. The actionable information is intended to assist making the relevant maintenance and operation decisions in order to minimize the life cycle costs of the machine and maximize production.

8.2 Sensor selection and installation

Retrofit sensors are normally provided and installed by the condition monitoring system supplier. If the user intends to do this task, there are important aspects that should be considered. For several monitoring techniques, the proper selection and mounting of sensors is critical for obtaining a signal that is reliably indicative of the incipient potential fault that it is intended to detect during early stages of development. Incorrect location of the sensor or improper mounting can result in a diminished signal, no signal or even an incorrect signal. Improper wiring and grounding can have the same effect. It is important to follow the sensor installation recommendations from the sensor and/or condition monitoring system supplier. The sensors described in this document are shown in Table 4.

Table 4 — Sensors used for hydro unit monitoring techniques as described in this document

Monitoring technique	Sensor description clause
Air gap (AG)	C.2.2
Magnetic flux (MF)	C.3.2
Partial discharge analysis (PDA)	C.4.2
Stator end winding vibration (EWV)	C.6.2
Bulb casing vibration	C.13
Blade clearance (Kaplan and bulb turbines)	C.14.2
Labyrinth seal clearance and temperature (Francis turbines)	C.15.2
Turbine cover for axial vibration	C.16.2
Performance monitoring	C.17.2
Cavitation and hydraulic disturbance monitoring	C.18.3

© ISO 2020 – All rights reserved

Documents
Document Sharing Hub
Full document details: BS ISO 19283:2020

Table 4 *(continued)*

Monitoring technique	Sensor description clause
Penstock pressure and vibration monitoring	C.19
Draft tube pressure and vibration monitoring	C.20

8.3 Condition monitoring system evaluation and selection

As a matter of definition, a condition monitoring system is intended to detect and diagnose a fault as early in its development as possible so there is maximum lead-time to cost-effectively plan maintenance ahead of time. Production during this time can continue normally and downtime due to a catastrophic failure is avoided. It is not intended to shut down the machine for safety. This is the purpose of a protection system, which detects a fault late in its development and trips the machine as late as possible. This is intended to minimize downtime and yet still avoid catastrophic damage to the machine, environment or people. In many cases, a protection system includes condition monitoring functionality or can be extended for that purpose.

If there is an existing monitoring system, whether it is a protection system or a legacy condition monitoring system, it should be evaluated to determine if it can be extended to include the necessary condition monitoring functionality for the current hydro unit application requirements. If a new condition monitoring system is needed, there are several solutions from which to select. A condition monitoring solution can be an online system (permanently installed), a portable system or a combination of these. As an online system, it can be a single system consisting of a field monitor installed on a single machine or a rack-based system in the control room for several machines. It can also be a collection of several independent systems including portable units, which can be dedicated to specific hydro monitoring tasks. The system or systems can be independent or integrated together or connected to a process control system, but what is important for many hydropower applications is that there is at least some remote monitoring capability.

Although not within the scope of this document, the condition monitoring system selection is ideally based on cost benefits and risk analysis. In addition to the items mentioned in 7.6 regarding monitoring and diagnostic technique requirements, other requirements should be considered regarding the monitoring system itself, such as:

— **IT resource requirements** — Network, servers, cyber-security, back-up, personnel;

— **System integration requirements** — Data sent to and received from DCS/SCADA, data historian, remote control centre and other monitoring systems (via Modbus, TCP/IP and RTU, which are often used in the hydro industry);

— **Alarming strategy** — How alarm limits are to be established;

— **Downtime needed for installation** — Machines are stopped or disassembled to install sensors/wiring;

— **Specialists needed** — To fulfil requirements to operate system and/or provide expertise to interpret results from measurements and plots;

— **System training needed** — Training requirements to configure, operate and manage the system;

— **System services needed** — Service provider to operate, maintain and upgrade system;

— **Diagnostic services needed** — Service provider to perform monitoring, diagnostics and reporting.

8.4 Daily operation of the monitoring system

Most condition monitoring systems provide automatic alarming functionality (detection descriptors that give a warning when alarm limits are exceeded) that allows potential failure modes to be detected

© ISO 2020 – All rights reserved
Documents
Document Sharing Hub
Full document details: BS ISO 19283:2020

at an early stage of development. Once detected, the faults can be trended and observed over time. Diagnostic descriptors are additional measurements that are used for analysis purposes, to identify the type and location of the fault, evaluate its severity and determine the lead-time to maintenance. Routine activities may also include issuing reports at periodic intervals to summarize the general condition of the machines or give notice when a fault is detected. In special situations, if the necessary monitoring system tools are available, root cause analysis may be performed to avoid experiencing recurring premature faults or prognostics may be implemented to better manage lifetime prediction of components.

The operator workload with the condition monitoring system depends on the type of system selected. Some systems offer facilities for correlating data together in a historian database to improve reliability of diagnoses. Other systems offer automated functionality to reduce the user workload, such as an automatic alarm management system (to reduce repetitive or unnecessary alarms), event recording (for event analysis, which includes post-processing of the saved raw signals) and automatic diagnosis functionality (decision support to reduce diagnostic time and expertise needed). Services are also offered where some or all monitoring, diagnostics and action reports are done by a third party.

Whatever system or services are selected, the common denominator for all is that the condition monitoring solution adds value to the user's business. This means the solution should be benchmarked and evaluated periodically, and refined and updated as necessary.

© ISO 2020 – All rights reserved

Documents
Document Sharing Hub
Full document details: BS ISO 19283:2020

Annex A
(informative)

Machine components and failure modes

A.1 General

The relevant hydro unit components shown in Figures A.1 and A.2 are subject to a wide range of potential failure modes, depending on the application. For brevity, a generalized list of the most typical faults is listed in Tables A.1 to A.5.

A.2 Hydro unit components

The terminology used here is based on IEC/TR 61364.

© ISO 2020 – All rights reserved
Documents
Document Sharing Hub
Full document details: BS ISO 19283:2020

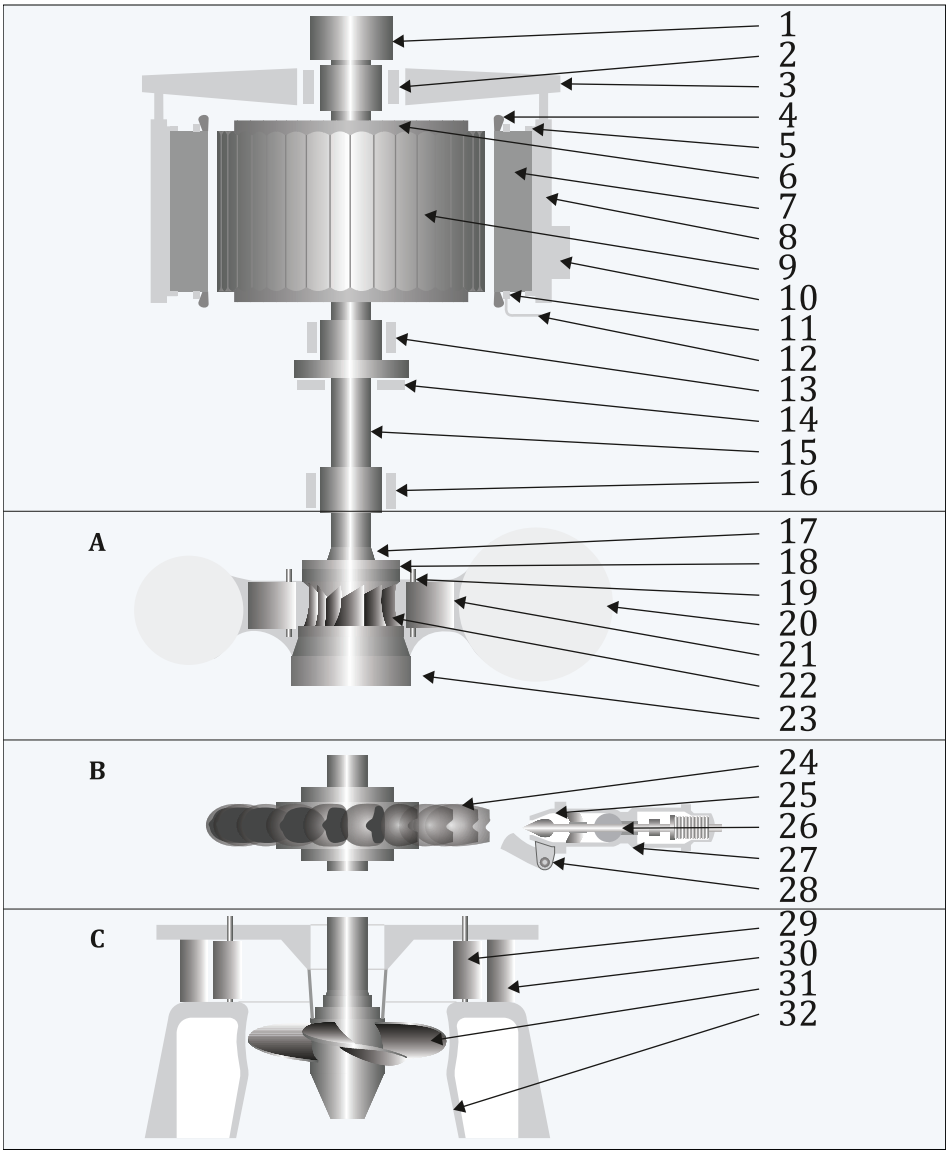

Key

Generator and shaft assembly

1 exciter (slip ring and brush assembly)
2 upper generator guide bearing
3 spider/upper support bracket
4 stator end winding
5 pressure plate/finger
6 rotor rim
7 stator core
8 stator frame
9 rotor pole
10 stator cooling system
11 end winding support and circuit ring(s)
12 main and neutral terminals
13 lower generator guide bearing
14 thrust bearing
15 shaft
16 turbine guide bearing

A – Francis

17 main shaft seal
18 turbine cover
19 distributor
20 spiral case
21 guide vane
22 runner
23 draft tube

B – Pelton

24 runner (bucket)
25 nozzle
26 spear
27 injector
28 deflector

C – Kaplan

29 guide vane
30 stay vane
31 runner blades
32 draft tube

NOTE There are several types of generators used in hydro units, including motor/generator types and vertical and horizontal configurations, but for the sake of simplicity, only a vertical salient pole synchronous generator is shown here.

Figure A.1 — Components for Francis, Pelton and Kaplan turbine hydro units

AVA Documents
Document Sharing Hub

© ISO 2020 – All rights reserved

Full document details: BS ISO 19283:2020

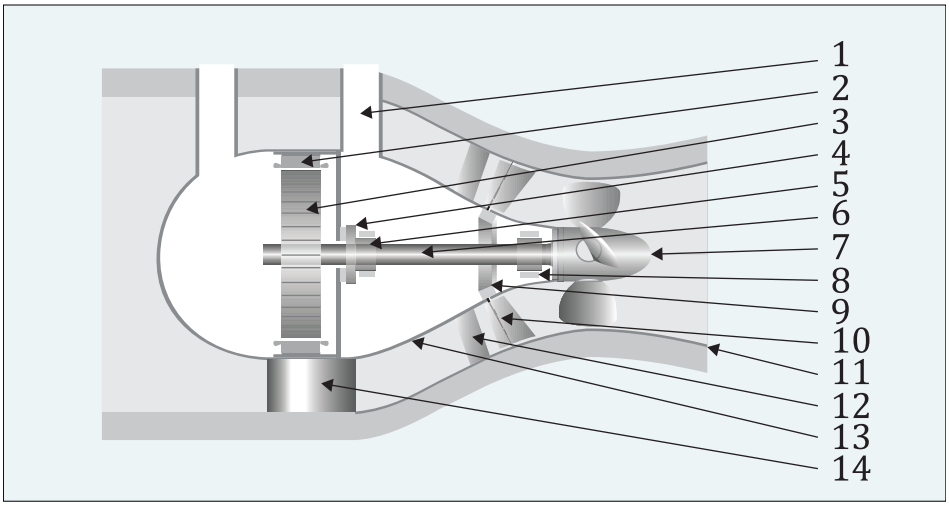

Key

1.	access shaft	5	generator guide bearing	8	turbine guide bearing	11.	draft tube
2	stator	6	shaft	9	wicket gate	12	stay vane
3	rotor	7	runner	10	guide vane	13	bulb casing
4	thrust bearing					14	bottom support

Figure A.2 — Components for a bulb hydro unit

A.3 Hydro unit component failure modes

The failure modes shown in Tables A.1 to A.5 are by no means an exhaustive list. Only some typical examples are shown for simplicity. Users are encouraged to prepare a complete list of the potential failure modes for their specific application, preferably using a reliability and risk analysis method suitable to their needs.

© ISO 2020 – All rights reserved
Documents
Document Sharing Hub
Full document details: BS ISO 19283:2020