BS ISO 19375:2024

BSI Standards Publication

Fibre-reinforced composites — Measurement of interfacial shear strength by means of a micromechanical single-fibre pull-out test

Documents
Document Sharing Hub

Full document details: BS ISO 19375:2024

National foreword

This British Standard is the UK implementation of ISO 19375:2024.

The UK participation in its preparation was entrusted to Technical Committee PRI/42, Fibre reinforced thermosetting plastics and prepregs.

A list of organizations represented on this committee can be obtained on request to its committee manager.

Contractual and legal considerations

This publication has been prepared in good faith, however no representation, warranty, assurance or undertaking (express or implied) is or will be made, and no responsibility or liability is or will be accepted by BSI in relation to the adequacy, accuracy, completeness or reasonableness of this publication. All and any such responsibility and liability is expressly disclaimed to the full extent permitted by the law.

This publication is provided as is, and is to be used at the recipient's own risk.

The recipient is advised to consider seeking professional guidance with respect to its use of this publication.

This publication is not intended to constitute a contract. Users are responsible for its correct application.

© The British Standards Institution 2024
Published by BSI Standards Limited 2024

ISBN 978 0 539 27931 3

ICS 83.120

Compliance with a British Standard cannot confer immunity from legal obligations.

This British Standard was published under the authority of the Standards Policy and Strategy Committee on 30 November 2024.

Amendments/corrigenda issued since publication

Date	Text affected

Documents
Document Sharing Hub

Full document details: BS ISO 19375:2024

International Standard

ISO 19375

First edition
2024-11

Fibre-reinforced composites — Measurement of interfacial shear strength by means of a micromechanical single-fibre pull-out test

Reference number
ISO 19375:2024(en)

© ISO 2024

Documents
Document Sharing Hub

Full document details: BS ISO 19375:2024

COPYRIGHT PROTECTED DOCUMENT

© ISO 2024

All rights reserved. Unless otherwise specified, or required in the context of its implementation, no part of this publication may be reproduced or utilized otherwise in any form or by any means, electronic or mechanical, including photocopying, or posting on the internet or an intranet, without prior written permission. Permission can be requested from either ISO at the address below or ISO's member body in the country of the requester.

ISO copyright office
CP 401 • Ch. de Blandonnet 8
CH-1214 Vernier, Geneva
Phone: +41 22 749 01 11
Email: copyright@iso.org
Website: www.iso.org

Published in Switzerland

Documents
Document Sharing Hub
Full document details: BS ISO 19375:2024

Contents

Page

Foreword ... **v**
Introduction ... **vi**
1 Scope ... **1**
2 Normative references ... **1**
3 Terms and definitions ... **1**
4 Principle ... **3**
5 Abbreviated terms, symbols and dimensions ... **3**
5.1 Symbols ... 3
5.2 Abbreviated terms ... 4
6 Apparatus ... **5**
6.1 Fibre diameter determination ... 5
6.1.1 General ... 5
6.1.2 Vibroscopic fibre linear density and diameter test ... 5
6.1.3 Optical fibre diameter determination ... 5
6.2 Embedding station ... 5
6.3 CRE testing machine ... 6
7 Test specimen ... **6**
8 Procedure ... **8**
8.1 Overview ... 8
8.2 General requirements ... 9
8.3 Fibre sampling and preparation ... 10
8.3.1 General ... 10
8.3.2 Fibre diameter determination ... 10
8.3.3 Fibre insertion into the embedding device ... 10
8.4 Matrix preparation ... 10
8.4.1 Thermoset matrices ... 10
8.4.2 Thermoplastic matrices ... 10
8.4.3 Concrete matrices ... 10
8.5 Preparation of matrix droplet ... 10
8.5.1 General ... 10
8.5.2 Thermoset matrices ... 11
8.5.3 Thermoplastic matrices ... 11
8.5.4 Concrete matrices ... 11
8.6 Fibre positioning, embedding and final forming ... 11
8.7 Solidification of the test specimen ... 12
8.7.1 General ... 12
8.7.2 Thermoset matrices ... 12
8.7.3 Thermoplastic matrices ... 12
8.7.4 Concrete matrices ... 13
8.8 Test specimen requirements and final validation ... 13
8.9 Post-preparation and conditioning ... 13
8.9.1 General ... 13
8.9.2 Thermoset matrices ... 13
8.9.3 Thermoplastic matrices ... 13
8.9.4 Concrete matrices ... 14
8.10 Pull-out test ... 14
8.10.1 General ... 14
8.10.2 Test specimen insertion and clamping ... 14
8.10.3 Testing conditions ... 15
8.10.4 Testing ... 15
8.10.5 Validation ... 15

© ISO 2024 – All rights reserved

Documents
Document Sharing Hub
Full document details: BS ISO 19375:2024

9 Evaluation ... **15**
9.1 General ... 15
9.2 Measured values and basic evaluation ... 16
9.2.1 Fibre diameter ... 16
9.2.2 Embedded length ... 16
9.2.3 Maximum force and apparent interfacial shear strength ... 16
9.2.4 Interfacial frictional force and stress ... 16
9.3 Further evaluations ... 17
9.3.1 General ... 17
9.3.2 Local interfacial shear strength derived from the debonding force ... 17
9.3.3 Alternative determination of local interfacial shear strength ... 17
9.3.4 Critical energy release rate ... 17

10 Expression of results ... **17**

11 Test report ... **17**
11.1 General ... 17
11.2 Fibre and matrix preparation ... 18
11.2.1 Fibre sampling and preparation ... 18
11.2.2 Matrix preparation ... 18
11.3 Test specimen preparation ... 18
11.3.1 Embedding device ... 18
11.3.2 Matrix droplet preparation ... 18
11.3.3 Fibre embedding ... 18
11.3.4 Test specimen solidification ... 19
11.3.5 Post-preparation and conditioning ... 19
11.4 Pull-out test and evaluation ... 19
11.4.1 CRE testing machine ... 19
11.4.2 Material parameters for evaluation ... 20
11.4.3 Basic evaluation and results ... 20
11.4.4 Evaluation of the local interfacial shear strength from the debonding force, if applied ... 20
11.4.5 Alternative evaluation of the local interfacial shear strength, if applied ... 20
11.4.6 Evaluation of the critical energy release rate, if applied ... 20
11.5 Statistics ... 20

Annex A (informative) **Images of embedding procedure** ... **21**

Annex B (informative) **Images of force-displacement curves of pull-out tests** ... **25**

Annex C (informative) **Exemplary embedding and pull-out settings for thermoset matrices** ... **29**

Annex D (informative) **Exemplary embedding and pull-out settings for thermoplastic matrices** ... **33**

Annex E (informative) **Exemplary embedding and pull-out settings for concrete matrices** ... **37**

Annex F (informative) **Specific material parameters** ... **39**

Annex G (informative) **Typical test results and precision data** ... **40**

Bibliography ... **44**

© ISO 2024 – All rights reserved

Documents
Document Sharing Hub
Full document details: BS ISO 19375:2024

Foreword

ISO (the International Organization for Standardization) is a worldwide federation of national standards bodies (ISO member bodies). The work of preparing International Standards is normally carried out through ISO technical committees. Each member body interested in a subject for which a technical committee has been established has the right to be represented on that committee. International organizations, governmental and non-governmental, in liaison with ISO, also take part in the work. ISO collaborates closely with the International Electrotechnical Commission (IEC) on all matters of electrotechnical standardization.

The procedures used to develop this document and those intended for its further maintenance are described in the ISO/IEC Directives, Part 1. In particular, the different approval criteria needed for the different types of ISO documents should be noted. This document was drafted in accordance with the editorial rules of the ISO/IEC Directives, Part 2 (see www.iso.org/directives).

ISO draws attention to the possibility that the implementation of this document may involve the use of (a) patent(s). ISO takes no position concerning the evidence, validity or applicability of any claimed patent rights in respect thereof. As of the date of publication of this document, ISO had not received notice of (a) patent(s) which may be required to implement this document. However, implementers are cautioned that this may not represent the latest information, which may be obtained from the patent database available at www.iso.org/patents. ISO shall not be held responsible for identifying any or all such patent rights.

Any trade name used in this document is information given for the convenience of users and does not constitute an endorsement.

For an explanation of the voluntary nature of standards, the meaning of ISO specific terms and expressions related to conformity assessment, as well as information about ISO's adherence to the World Trade Organization (WTO) principles in the Technical Barriers to Trade (TBT), see www.iso.org/iso/foreword.html.

This document was prepared by Technical Committee ISO/TC 61, *Plastics*, Subcommittee SC 13, *Composites and reinforcement fibres*.

Any feedback or questions on this document should be directed to the user's national standards body. A complete listing of these bodies can be found at www.iso.org/members.html.

© ISO 2024 – All rights reserved

Documents
Document Sharing Hub
Full document details: BS ISO 19375:2024

Introduction

Fibre-reinforced composites have become an indispensable part of modern high-tech applications due to the excellent tensile properties of the reinforcement fibres incorporated in the composite. This requires that the loads in a composite need to be distributed evenly to all fibres by means of a matrix. Therefore, a high interfacial shear strength is required for a good load transfer. Hence, the interfacial shear strength is one of the key parameters in composite technology.

To characterize the interfacial shear strength, composites with unidirectional aligned fibres are manufactured. A tensile test is then performed perpendicular to the fibre orientation (transverse tensile test), or a short beam shear strength test (as defined for instance in ISO 14130 or ASTM D2344) is performed to measure the apparent interlaminary shear strength (ILSS).

However, the maximum stress found in such macromechanical tests does not only depend on the fibre-matrix adhesion strength, it is also governed by the following additional factors: the fibre content, orientation, length, diameter and fibre distribution homogeneity, the pore void of the test specimens, and the mechanical properties of the fibre and the matrix. To achieve repeatable results for the fibre-matrix adhesion strength through macromechanical tests, it is necessary to keep a rigid control of the manufacturing process of the specimen, making the overall testing procedure laborious and difficult to compare across laboratories.

Micromechanical testing techniques have several advantages over the macromechanical methods. By involving only single fibres in the test, most dependencies on the manufacturing process of the test specimen listed above are avoided. Whereas macroscopic methods can only determine the apparent interfacial shear strength, the single-fibre pull-out test as a micromechanical test method also can determine the local interfacial shear strength, the interfacial frictional stress, and the critical interfacial energy release rate. Here, the local interfacial shear strength is essential for composites applications with cyclic load, since it characterizes to which stress a composite can be loaded before the interface between fibre and matrix is damaged. The critical interfacial energy release rate and the interfacial frictional stress have a strong impact on the energy absorption of composites, which is important in crash situations as for example in mobility applications.

This document describes stringent methods for specimen preparation, conditioning, and pull-out testing. Practical trials have shown that following these procedures leads to minimum variability in the test results.

© ISO 2024 – All rights reserved

Documents
Document Sharing Hub
Full document details: BS ISO 19375:2024

Fibre-reinforced composites — Measurement of interfacial shear strength by means of a micromechanical single-fibre pull-out test

1 Scope

This document specifies a test method for determining the interfacial shear strength between a single fibre and a matrix by means of a pull-out test. The method can be used to measure the critical energy release rate.

The method is applicable to reinforcement fibres, such as carbon fibres, glass fibres, basalt fibres and similar stiff reinforcement fibres and to thermoset, thermoplastic and fine-grained concrete matrices. It can be used for polymeric reinforcement fibres and for other inorganic matrices.

It is not applicable to:

a) elastomeric fibres and elastomeric matrices such as rubber;

b) matrices which cure or melt at temperatures above 400 °C;

c) matrices that show a strong tendency to bubble formation or expansion during the sample-preparation process;

d) foams.

2 Normative references

The following documents are referred to in the text in such a way that some or all of their content constitutes requirements of this document. For dated references, only the edition cited applies. For undated references, the latest edition of the referenced document (including any amendments) applies.

ISO 1973, *Textile fibres — Determination of linear density — Gravimetric method and vibroscope method*

ISO 2602, *Statistical interpretation of test results — Estimation of the mean — Confidence interval*

EN 12390-2, *Testing hardened concrete — Part 2: Making and curing specimens for strength tests*

3 Terms and definitions

For the purposes of this document, the following terms and definitions apply.

ISO and IEC maintain terminology databases for use in standardization at the following addresses:

— ISO Online browsing platform: available at https://www.iso.org/obp

— IEC Electropedia: available at https://www.electropedia.org/

3.1
constant-rate-of-extension testing machine
CRE testing machine
tensile testing machine provided with one specimen holder, which is stationary, and one clamp, which moves with a constant speed throughout the test, the entire testing system being virtually free from deflection

[SOURCE: ISO 5079:2020, 3.10, modified — “clamp” was replaced with “specimen holder“.]

© ISO 2024 – All rights reserved

Documents
Document Sharing Hub
Full document details: BS ISO 19375:2024

3.2
crucible
receptacle, made of aluminium or stainless steel, to hold a drop of matrix into which one single fibre is embedded

3.3
pull-out test
method of pulling out one single embedded fibre from a solidified drop of matrix, carried out with a *CRE testing machine* (3.1)

3.4
force-displacement curve
graphical representation of the force recorded during the *pull-out test* (3.3) over the displacement of the moving clamp of the *CRE testing machine* (3.1)

3.5
maximum force
highest force value taken from the *force-displacement curve* (3.4) appearing just before the complete debonding of the fibre from the solidified matrix during the pull-out

3.6
debonding force
force at which the fibre starts debonding from the solidified drop of matrix, derived from the *force-displacement curve* (3.4)

3.7
interfacial frictional force
force measured after complete debonding, caused by only the friction between the fibre and the solidified matrix, taken from the *force-displacement curve* (3.4)

3.8
embedding depth
selected depth to which the embedding device inserts the fibre into the matrix

3.9
embedded length
resulting length of the fibre in contact with the solidified matrix, corresponds to the displacement at which the fibre completely slips out of the solidified matrix, taken from the *force-displacement curve* (3.4)

3.10
final forming
process, in which the matrix maximizes the wetting of the fibre and the meniscus reaches a steady state

3.11
solidification
process of transformation of the matrix from liquid to solid

Note 1 to entry: The term solidification includes both the commonly used solidification of thermoplastics by cooling as well as the curing of thermosets and concrete matrices.

3.12
fixing
first step of the *solidification* (3.11) of matrices, after which a test specimen can be removed from the embedding device without the risk that the fibre redirects inside the matrix

3.13
curing
process of *solidification* (3.11) of thermoset and concrete matrices

3.14
apparent interfacial shear strength
maximum force (3.5) normalized to the contact area between the fibre and the solidified matrix

© ISO 2024 – All rights reserved

Documents
Document Sharing Hub
Full document details: BS ISO 19375:2024

3.15
interfacial frictional stress
interfacial frictional force (3.7) normalized to the contact area between the fibre and the solidified matrix

3.16
local interfacial shear strength
debonding force (3.6) related to the contact area of the interface between the fibre and the solidified matrix, without the impact of the friction between the fibre and the matrix

3.17
critical interfacial energy release rate
interfacial toughness
calculated as a function of the crack length (energy-based method), taking the deformation of the fibre and matrix during the pull-out into account

4 Principle

A single fibre is embedded into a drop of matrix at a defined temperature to form a test specimen for the pull-out test by means of an embedding station. If required, the embedding can take place in an inert gas atmosphere. Embedding depth and speed are variable. After embedding, the test specimen is solidified, for instance by heating up to a curing temperature (for example for thermoset matrices) or cooling down to a suitable temperature for matrix solidification (for example for thermoplastic matrices).

After complete solidification and conditioning, the test specimen is transferred into a CRE testing machine for pull-out testing.

During the pull-out test, certain values are measured along the force-displacement curve respectively calculated from these measured values.

5 Abbreviated terms, symbols and dimensions

5.1 Symbols

Table 1 lists symbols used throughout this document.

Table 1 — Test characteristics, symbols, and dimensions

Characteristic	Matrix	Symbol	Unit
Material parameter			
Fibre density	—	ρ	g/cm^3
Fibre linear density	—	ρ_l	dtex
Fibre diameter	—	d_f	µm
Fibre breaking force	—	f_B	cN
Melting temperature	TP	T_M	°C
Solidification temperature	TP	T_S	°C
Testing procedure			
Heating rate to embedding temperature	TS, TP	r_{TE}	K/min
Time at embedding temperature	TS, TP	t_{TE}	s
Embedding temperature	TS, TP	T_E	°C
Embedding depth	TS, TP, C	l_{ED}	µm
Embedding speed	TS, TP, C	v_E	mm/min
Forming time	TS, TP, C	t_F	s

© ISO 2024 – All rights reserved

Documents
Document Sharing Hub
Full document details: BS ISO 19375:2024

Table 1 *(continued)*

Characteristic	Matrix	Symbol	Unit
Curing temperature	TS, C	T_C	°C
Heating rate to curing temperature	TS, C	r_{TC}	K/min
Time at curing temperature	TS, C	t_{TC}	s
Below-solidification-temperature	TP	T_{BS}	°C
Cooling rate to below-solidification-temperature	TP	r_{TBS}	K/min
Final cooling rate	TS, TP	r_{TF}	K/min
Final withdrawal temperature	TS, TP	T_F	°C
Testing speed for pull-out test	All	V_P	mm/min
Evaluation			
Maximum force	All	F_{max}	cN
Debonding force	All	F_d	cN
Interfacial frictional force	All	F_b	cN
Embedded length	All	l_e	µm
Apparent interfacial shear strength	All	τ_{app}	MPa
Interfacial frictional stress	All	τ_f	MPa
Local interfacial shear strength	All	τ_d	MPa
Alternative local interfacial shear strength	All	$\tau_{d,alt}$	MPa
Shear-lag parameter	All	β	—
Residual thermal stresses	All	τ_T	MPa
Critical energy release rate	All	G_{ic}	J/m^2

5.2 Abbreviated terms

Table 2 lists abbreviated terms used throughout this document.

Table 2 — Materials and abbreviated terms

Material	Abbreviation
Fibres	
Carbon fibre	CF
Recycled carbon fibre	rCF
Glass fibre	GF
Natural fibre	NF
Matrices	
Thermoset	TS
Thermoplastic	TP
Concrete	Concrete
Polypropylene	PP
Polyamide 6	PA6
Polyether ether ketone	PEEK
Polyether block amide	PEBA
Polyurethane	PU

© ISO 2024 – All rights reserved

Documents
Document Sharing Hub
Full document details: BS ISO 19375:2024

Table 2 *(continued)*

Material	Abbreviation
Polycarbonate	PC
Epoxy	EP
Vinylester	VE

6 Apparatus

6.1 Fibre diameter determination

6.1.1 General

The diameter of each individual fibre shall be determined close to the position where the fibre is embedded into the matrix. The following methods may be used for the determination of the individual fibre diameter.

NOTE For the sake of simplicity, all calculations within this document assume a circular fibre cross section.

6.1.2 Vibroscopic fibre linear density and diameter test

This method uses a device measuring the linear density according to the vibroscopic principle, which shall be in accordance with ISO 1973. Here, a fibre with a known pretension is excited to its fundamental resonance frequency at a known vibrating length.

For glass fibres, due to a possible impact of the bending stiffness to the resonance curve, a vibrating length of at least 50 mm and a pretension of 3 cN/tex are strongly recommended. For carbon fibres, a vibrating length of minimum 25 mm and a pretension of 1 cN/tex are commonly used.

Based on the selected pretension and vibrating length and on the measured resonance frequency, the linear density ρ_l is calculated following the vibrating string equation. Employing the known fibre density ρ (specified by the fibre producer), the fibre diameter d_f is calculated according to Formula (1):

$$d_f = 10 \cdot \sqrt{\frac{4 \cdot \rho_l}{\pi \cdot \rho}} \quad (1)$$

where

d_f is the fibre diameter, in micrometres (µm);

ρ_l is the fibre linear density, in decitex (dtex, g/1 000 m);

ρ is the fibre density, in gram per square centimetres (g/cm^3).

The determination of the fibre diameter is required to calculate the contact area between the fibre and the matrix.

6.1.3 Optical fibre diameter determination

This method uses an optical assembly to measure the individual fibre diameter directly. Possible principles are a laser-scan micrometre, a laser diffractometer, an optical microscope, or an appropriate device according to ISO 11567.

6.2 Embedding station

This method uses a device for producing test specimens for the pull-out test, by embedding a single fibre into a drop of matrix placed in a crucible. A single fibre with a minimum length of 5 mm is placed into a cannula, after insertion the fibre protrudes out of the cannula. The protruding end is embedded into the

© ISO 2024 – All rights reserved

Documents
Document Sharing Hub
Full document details: BS ISO 19375:2024

matrix, embedding depth and speed are variable. During embedding and solidification, the fibre can be held with low tension in the cannula by means of a holding air flow such that it can follow a possible shrinkage of the matrix.

The device is equipped with a heating system for the crucible, allowing temperature changes at rates of 0,1 K/min to 99,9 K/min up to a maximum temperature of 400 °C. The heat transfer is given by the contact between the heating system and the bottom side of the crucible. The actual temperature at the top of the matrix might be lower than the displayed actual heater temperature, due to the geometry of the setup. Temperature, temperature rates and duration of heating (time at temperature) can be adjusted.

The device is equipped with an active cooling system which can be enabled, and which rate can be adjusted. The maximum cooling shall allow the device to cool down from 400 °C to 40 °C within 6,5 min (from 100 °C to 40 °C within 3,5 min).

The device is equipped with a triaxial linear table to allow positioning of the fibre relative to the matrix, and a microscope to observe and control the positioning. The fibre can be moved along its axis for embedding using an additional z-axis of the embedding device.

The device is equipped with a system to flush the embedding zone with an inert gas to avoid oxidation of the matrix.

6.3 CRE testing machine

This method uses a device for pull-out testing, equipped with an upper holder for the test specimen mounted to the force-measuring system, and a moveable lower draw-off clamp to pull the single fibre out of the matrix.

The device shall be equipped with a high-precision load cell with a minimum force range higher than the fibre breaking force to be tested and a resolution of 1 µN or better. The distance between the draw-off clamp and the upper specimen holder can be freely adjusted, the testing speed can be adjusted to values between 0,1 mm/min to 100 mm/min.

The draw-off clamp consists of one stationary and one moveable clamp jaw with adjustable clamping pressure. The surface of the clamp jaws in contact with the specimen shall be made of a material to provide correct grip without damaging the fibre, thereby avoiding slippage and jaw breaks.

A high-precision displacement measurement sensor with a resolution of 0,1 µm or better is required. The device is resistant against deformation under load, with a maximum deflection of 0,02 mm/N.

The lateral position of the draw-off clamp is adjustable to match the position of the fibre axis. In this way, the fibre is clamped at minimum shear force even at very low distances between matrix and clamp. Adjustment is carried out by means of a camera with microscopic optics.

During the pull-out test, the displacement of the draw-off clamp and the resulting force is recorded as a force-displacement curve.

7 Test specimen

The test specimen consists of a rotationally symmetric metallic crucible, a drop of a matrix placed into the upper recess of the crucible, and a fibre embedded into the matrix. Figure 1 shows the physical dimensions of the crucible that shall be used for the preparation of the test specimen.

© ISO 2024 – All rights reserved

Documents
Document Sharing Hub
Full document details: BS ISO 19375:2024

Dimensions in millimetres

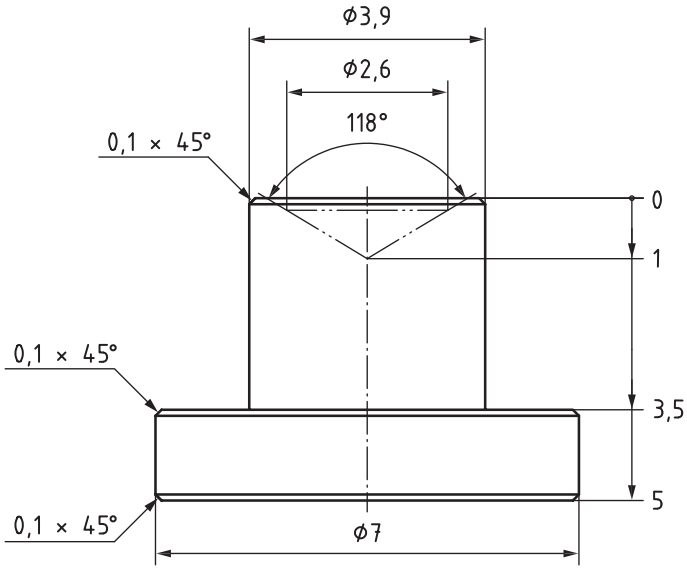

Figure 1 — Test specimen, crucible

Figure 2 shows a schematic lateral section through the test specimen.

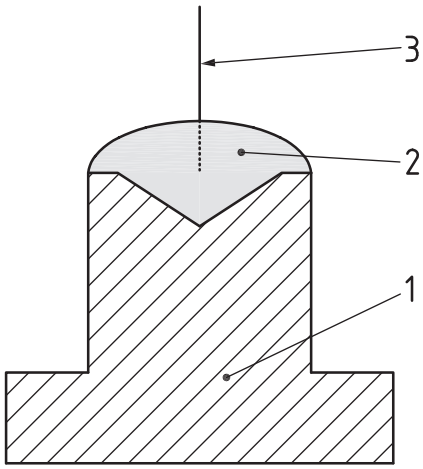

Key

1 crucible with recess

2 matrix drop

3 embedded fibre (dashed line = embedded section)

Figure 2 — Test specimen, lateral section

An appropriate embedding device to create the test specimen is described in 6.2.

After the test specimen has been produced and solidified, it is transferred to the CRE testing machine. Figure 3 shows schematic lateral sections through the test specimen, mounted into the upper test specimen holder and the lower draw-off clamp of the CRE testing machine, described in 6.3.

© ISO 2024 – All rights reserved

Documents
Document Sharing Hub
Full document details: BS ISO 19375:2024

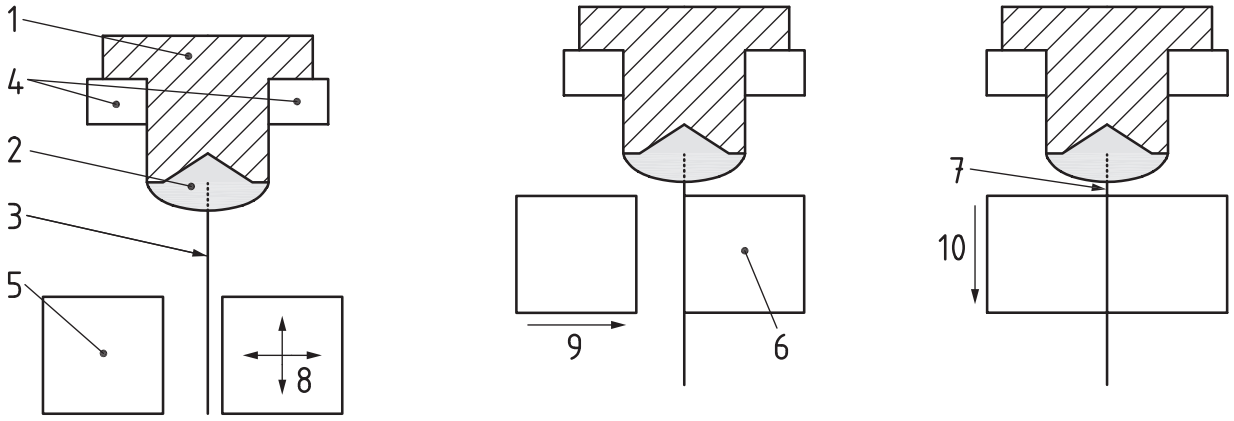

a) Draw-off clamp adjustment **b) Draw-off clamp open** **c) Draw-off clamp closed**

Key

1 crucible with recess
2 matrix drop
3 embedded fibre (dashed line = embedded section)
4 test specimen holder = measuring clamp
5 movable jaw of draw-off clamp
6 stationary jaw of draw-off clamp
7 free fibre length
8 lateral + vertical adjustment
9 closing direction of movable clamp jaw
10 draw-off direction

Figure 3 — Test specimen in CRE testing machine, lateral section

8 Procedure

8.1 Overview

Fibre embedding and matrix solidification are carried out using complex temperature profiles, described in 8.2 to 8.10. Figure 4 and Figure 5 schematically illustrate those temperature profiles for thermoset respectively thermoplastic matrices.

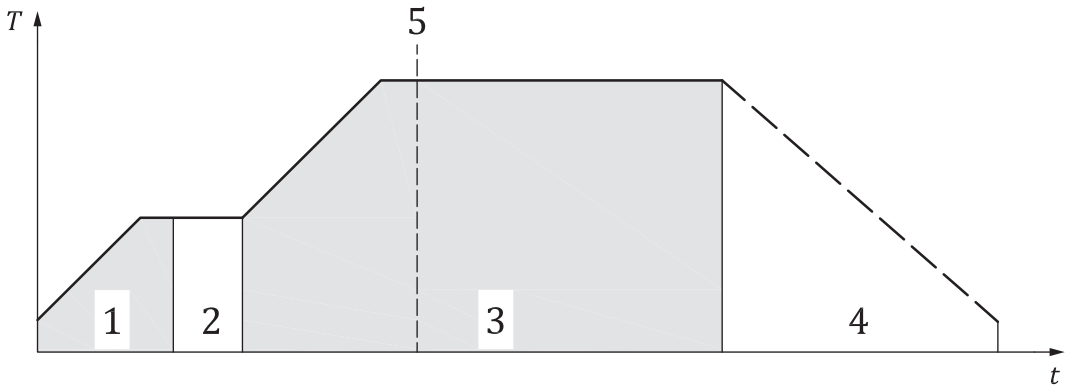

Key

T temperature
t time
1 heating to and holding embedding temperature for degassing (heating rate to embedding temperature, time at embedding temperature, embedding temperature)
2 positioning, embedding and final forming (embedding temperature, forming time)

© ISO 2024 – All rights reserved

Documents
Document Sharing Hub
Full document details: BS ISO 19375:2024

3 curing (heating rate to curing temperature, time at curing temperature, curing temperature; divided into several steps, if required)

4 cooling (if inside the embedding device: final cooling rate, final withdrawal temperature)

5 optional test specimen extraction from the embedding device after fixing

Figure 4 — Typical temperature profile for thermoset matrices

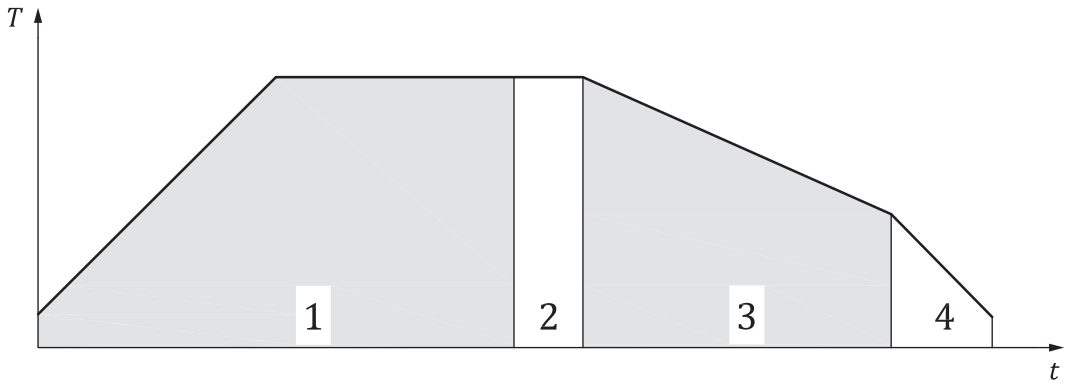

Key

T temperature

t time

1 heating to and holding of the embedding temperature (heating rate to embedding temperature, time at embedding temperature, embedding temperature)

2 positioning, embedding and final forming (embedding temperature, forming time)

3 cooling down below-solidification-temperature (cooling rate to below-solidification-temperature, below-solidification-temperature)

4 final cooling (final cooling rate, final withdrawal temperature)

Figure 5 — Typical temperature profile for thermoplastic matrices

After solidification and conditioning, the test specimen is transferred to the CRE testing machine for pull-out testing.

8.2 General requirements

A glove shall be used during all following steps to avoid any influence from contamination.

The embedding depth for a test series can be determined by iterative pre-tests, where the maximum pull-out force is investigated as a function of the embedding depth, following Clause 8. The embedding depth shall be chosen such that the maximum pull-out force is close to but does not exceed the fibre breaking force (for example measured as described in ISO 5079 or ISO 11566). The resulting embedded length (refer to 9.2.2) shall be a least 4 times the fibre diameter.

In case the embedded length is much smaller than the embedding depth, this can be an indicator for irregular wetting, and the processing parameters should be reconsidered.

For a comparative test of similar fibre-matrix combinations, the same embedding depth shall be chosen for test specimen preparation and, in case one of the further evaluations in 9.3 is applied, the embedded length shall be similar.

A sufficient number of test specimen shall be prepared to ensure solid average values of the evaluated parameters. After testing, invalid tests shall be eliminated, assuring that the sample size is not below 15 valid pull-out tests, unless otherwise agreed-on between the interested parties. For more information on invalid results, please refer to 8.10 and Annex B.

© ISO 2024 – All rights reserved

Documents
Document Sharing Hub
Full document details: BS ISO 19375:2024