BS ISO 19430:2024

BSI Standards Publication

Determination of particle size distribution and number concentration by particle tracking analysis (PTA)

Documents
Document Sharing Hub

Full document details: BS ISO 19430:2024

National foreword

This British Standard is the UK implementation of ISO 19430:2024. It supersedes BS ISO 19430:2016, which is withdrawn.

The UK participation in its preparation was entrusted to Technical Committee LBI/37, Particle characterization including sieving.

A list of organizations represented on this committee can be obtained on request to its committee manager.

Contractual and legal considerations

This publication has been prepared in good faith, however no representation, warranty, assurance or undertaking (express or implied) is or will be made, and no responsibility or liability is or will be accepted by BSI in relation to the adequacy, accuracy, completeness or reasonableness of this publication. All and any such responsibility and liability is expressly disclaimed to the full extent permitted by the law.

This publication is provided as is, and is to be used at the recipient's own risk.

The recipient is advised to consider seeking professional guidance with respect to its use of this publication.

This publication is not intended to constitute a contract. Users are responsible for its correct application.

© The British Standards Institution 2024
Published by BSI Standards Limited 2024

ISBN 978 0 539 17551 6

ICS 19.120

Compliance with a British Standard cannot confer immunity from legal obligations.

This British Standard was published under the authority of the Standards Policy and Strategy Committee on 31 August 2024.

Amendments/corrigenda issued since publication

Date	Text affected

Documents
Document Sharing Hub

Full document details: BS ISO 19430:2024

International Standard

ISO 19430

Second edition
2024-08

Determination of particle size distribution and number concentration by particle tracking analysis (PTA)

Détermination de la distribution granulométrique et de la concentration en nombre par l'analyse de suivi de particule (PTA)

Reference number
ISO 19430:2024(en)

© ISO 2024

Documents
Document Sharing Hub

Full document details: BS ISO 19430:2024

COPYRIGHT PROTECTED DOCUMENT

© ISO 2024

All rights reserved. Unless otherwise specified, or required in the context of its implementation, no part of this publication may be reproduced or utilized otherwise in any form or by any means, electronic or mechanical, including photocopying, or posting on the internet or an intranet, without prior written permission. Permission can be requested from either ISO at the address below or ISO's member body in the country of the requester.

ISO copyright office
CP 401 • Ch. de Blandonnet 8
CH-1214 Vernier, Geneva
Phone: +41 22 749 01 11
Email: copyright@iso.org
Website: www.iso.org

Published in Switzerland

Documents
Document Sharing Hub

Full document details: BS ISO 19430:2024

Contents

Page

Foreword ... **v**
Introduction ... **vi**
1 Scope ... **1**
2 Normative references ... **1**
3 Terms and definitions ... **1**
4 Symbols and abbreviated terms ... **6**
5 Principles ... **7**
5.1 General ... 7
5.2 Measurement types ... 7
5.2.1 General ... 7
5.2.2 Particle detection ... 8
5.2.3 Brownian motion tracking ... 9
5.2.4 Gravitational motion tracking ... 9
5.3 Key physical parameters ... 10
5.4 Limits of detection ... 10
5.4.1 General ... 10
5.4.2 Lower size limit of detection ... 11
5.4.3 Upper size limit of detection ... 11
5.4.4 Particle number concentration measurement limits ... 12
5.4.5 Sample and sampling volume ... 13
5.5 Measurement precision and uncertainties ... 13
5.5.1 Size measurement uncertainty ... 13
5.5.2 Counting efficiency ... 14
5.5.3 Size resolution ... 15
5.5.4 Polydispersity ... 15
5.5.5 Sensing volume ... 15
6 Apparatus ... **17**
6.1 General ... 17
6.2 Sample cell (with sample in dispersion) ... 17
6.3 Illumination ... 17
6.4 Optical image capturing ... 18
6.5 Image analysis, tracking and data processing computer ... 18
7 Measurement procedure ... **20**
7.1 General ... 20
7.2 Sample preparation ... 20
7.3 Instrument set-up and initialisation ... 21
7.4 Sample delivery ... 21
7.5 Sample illumination ... 22
7.6 Particle imaging and video capture ... 22
7.7 Track analysis ... 22
7.8 Measurements ... 23
7.8.1 Particle sizing and number-based size distribution ... 23
7.8.2 Total particle number measurement ... 24
7.8.3 Particle background count ... 24
7.8.4 Volume concentration ... 24
7.9 Results evaluation ... 24
7.9.1 General ... 24
7.9.2 Particle size evaluation ... 24
7.9.3 Particle count results interpretation ... 24
7.9.4 Distribution analysis ... 25
7.9.5 Data analysis and results display ... 25
8 System qualification and quality control ... **25**

© ISO 2024 – All rights reserved

Documents
Document Sharing Hub
Full document details: BS ISO 19430:2024

8.1 General 25
8.2 System installation requirements 25
8.3 System maintenance 25
8.4 System operation 26
8.5 Instrument qualification (for sizing) 26
8.6 Instrument qualification (for number concentration) 27

9 Data recording 27

10 Test report 28

Annex A (informative) **Theory 30**

Annex B (informative) **Comparative study of number concentration evaluation of gold nanoparticles in suspension 33**

Annex C (informative) **Using sedimentation data with PTA 35**

Annex D (informative) **Serial dilution experiment 37**

Bibliography 40

© ISO 2024 – All rights reserved

Documents
Document Sharing Hub
Full document details: BS ISO 19430:2024

Foreword

ISO (the International Organization for Standardization) is a worldwide federation of national standards bodies (ISO member bodies). The work of preparing International Standards is normally carried out through ISO technical committees. Each member body interested in a subject for which a technical committee has been established has the right to be represented on that committee. International organizations, governmental and non-governmental, in liaison with ISO, also take part in the work. ISO collaborates closely with the International Electrotechnical Commission (IEC) on all matters of electrotechnical standardization.

The procedures used to develop this document and those intended for its further maintenance are described in the ISO/IEC Directives, Part 1. In particular, the different approval criteria needed for the different types of ISO document should be noted. This document was drafted in accordance with the editorial rules of the ISO/IEC Directives, Part 2 (see www.iso.org/directives).

ISO draws attention to the possibility that the implementation of this document may involve the use of (a) patent(s). ISO takes no position concerning the evidence, validity or applicability of any claimed patent rights in respect thereof. As of the date of publication of this document, ISO had not received notice of (a) patent(s) which may be required to implement this document. However, implementers are cautioned that this may not represent the latest information, which may be obtained from the patent database available at www.iso.org/patents. ISO shall not be held responsible for identifying any or all such patent rights.

Any trade name used in this document is information given for the convenience of users and does not constitute an endorsement.

For an explanation of the voluntary nature of standards, the meaning of ISO specific terms and expressions related to conformity assessment, as well as information about ISO's adherence to the World Trade Organization (WTO) principles in the Technical Barriers to Trade (TBT), see www.iso.org/iso/foreword.html.

This document was prepared by Technical Committee ISO/TC 24, *Particle characterization including sieving*, Subcommittee SC 4, *Particle characterization*.

This second edition cancels and replaces the first edition (ISO 19430:2016), which has been technically revised.

The main changes are as follows:

— Inclusion of particle counting and number concentration measurements.

— Inclusion of information on gravitational motion tracking.

— Inclusion of information on simultaneous multispectral detection.

— Inclusion of particle number concentration comparison to other methods.

— Inclusion of information on serial dilution for PTA.

Any feedback or questions on this document should be directed to the user's national standards body. A complete listing of these bodies can be found at www.iso.org/members.html.

© ISO 2024 – All rights reserved

Documents
Document Sharing Hub
Full document details: BS ISO 19430:2024

Introduction

Regulatory, scientific and commercial requirements for nanomaterial characterization or characterization of particulate suspensions where particle sizing and counting is used provide a strong case for further development of techniques such as particle tracking analysis (PTA), also known as nanoparticle tracking analysis (NTA).[1] Due to the fact that the term PTA covers a larger size range and is more generic,[1)] the term PTA is used throughout this document to refer to NTA and PTA.

PTA is based on measuring the diffusion movement of objects (particles, droplets or bubbles) in a dispersion, but can also be used to undertake gravitational migration tracking by means of laser illumination, imaging of scattered light, particle identification and localization, and individual particle tracking.[2)] This document covers two tracking regimes.

— Brownian motion tracking for smaller particles.

— Gravitational fall tracking for larger particles.

In both cases, the suspension is an even dispersion of particles, gas bubbles or other liquid droplets. The hydrodynamic diameter of the individual particles, droplets or bubbles is related to Brownian motion parameters via the Einstein equation and via Stokes law for gravitational migration dynamics.

In recent years, the academic community working in fields such as liposomes and other drug delivery vehicles, nanotoxicology, viruses, exosomes, protein aggregation, inkjet inks, pigment particles, cosmetics, foodstuffs, fuel additives and ultrafine bubbles began using the PTA technology for characterization. ASTM E2834-12 was developed to give guidance to the measurement of particle size distribution by means of NTA. This document aims to broaden the scope of the specification and to introduce system tests for PTA operation as well as to extend the particle size range from nanoscale to microscale sizes. One way to do this is to combine Brownian motion tracking with gravitational migration tracking in the same device on the same sample.

For a number of years, the stakeholders working with nanomaterials safety, regulation, compliance and fundamental research into applications such as biomedicine, catalysis, fuel additives and others were looking for a method (or a combination of methods) for counting and sizing particles in a wide size range (larger than 1 nm to 100 nm). Particle size distributions are often used to evaluate nanomaterials for regulatory purposes (see Reference [41] on the definition of nanomaterial) or for material specification compliance. A number of techniques are available for such characterization, but samples need to be monodisperse. A bigger challenge is to provide an accurate particle count. Techniques such as PTA, electron microscopy, spICP-MS or electrical sensing zone (see ISO 13319-1) allow particle count but have method-specific issues.

One of the key aspects of PTA is the interpretation of data. The key measurand obtained from PTA measurement is the number-based particle size distribution where the size is taken to mean the hydrodynamic diameter of the particles in the sample. The hydrodynamic particle diameters measured with PTA can be different from equivalent particle diameters obtained with different techniques[3] such as dynamic light scattering (DLS) (see ISO 22412:2017) or electron microscopy (see ISO 21363 and ISO 19749).

1) NTA is the most recognised abbreviation for the technique described in this document. However, PTA includes NTA in its size range of measurements.

2) For the purpose of this document, “tracking” is intended to mean “following in terms of particle’s x and y position”; “track” is defined in 3.32.

© ISO 2024 – All rights reserved

Documents
Document Sharing Hub
Full document details: BS ISO 19430:2024

Determination of particle size distribution and number concentration by particle tracking analysis (PTA)

1 Scope

This document specifies the particle tracking analysis (PTA) method under static (no flow) conditions for the determination of the number–based particle size distribution and the number concentration in liquid dispersions (solid particles, liquid droplets or bubbles suspended in liquids).

This document covers two tracking regimes.

— Brownian motion tracking for smaller particles.

— Gravitational fall tracking for larger particles.

This document outlines the theory and basic principles of the PTA method along with its limitations and advantages for both size evaluation and number concentration measurements. It also describes commonly used instrument configurations and measurement procedures as well as system qualifications and data reporting.

2 Normative references

The following documents are referred to in the text in such a way that some or all of their content constitutes requirements of this document. For dated references, only the edition cited applies. For undated references, the latest edition of the referenced document (including any amendments) applies.

ISO 13322-1:2014, *Particle size analysis — Image analysis methods — Part 1: Static image analysis methods*

ISO/IEC 17025, *General requirements for the competence of testing and calibration laboratories*

3 Terms and definitions

For the purposes of this document, the following terms and definitions apply.

ISO and IEC maintain terminology databases for use in standardization at the following addresses:

— ISO Online browsing platform: available at https://www.iso.org/obp

— IEC Electropedia: available at https://www.electropedia.org/

3.1
nanoscale
length range approximately from 1 nm to 100 nm

[SOURCE: ISO 80004-1:2023, 2.1]

3.2
nanoparticle
discrete piece of material with all external dimensions in the *nanoscale* (3.1)

Note 1 to entry: If the dimensions differ significantly (typically by more than three times), terms such as "nanofibre" or "nanoplate" are preferred to the term nanoparticle.

[SOURCE: ISO 80004-1:2023, 3.3.4]

© ISO 2024 – All rights reserved

Documents
Document Sharing Hub
Full document details: BS ISO 19430:2024

3.3
particle
minute piece of matter with defined physical boundaries

Note 1 to entry: A physical boundary can also be described as an interface.

Note 2 to entry: This general particle definition applies to nano-objects.

[SOURCE: ISO 80004-1:2023, 3.2.1]

3.4
particle size
linear dimension of a *particle* (3.3) determined by a specified measurement method and under specified measurement conditions

Note 1 to entry: Different methods of analysis are based on the measurement of different physical properties. Independent of the particle property actually measured, the particle size can be reported as a linear dimension, e.g. as an equivalent spherical diameter.

[SOURCE: ISO/TS 80004-6:2021, 3.1.1]

3.5
particle size distribution
distribution of the quantity of *particles* (3.3) as a function of *particle size* (3.4)

Note 1 to entry: Particle size distribution may be expressed as cumulative distribution or a distribution density (distribution of the fraction of material in a size class, divided by the width of that class).

Note 2 to entry: The quantity can be, for example, number, mass or volume based.

[SOURCE: ISO/TS 80004-6:2021, 4.1.2]

3.6
equivalent diameter
diameter of a sphere that produces a response by a given *particle size* (3.4) measurement method that is equivalent to the response produced by the *particle* (3.3) being measured

Note 1 to entry: The physical property to which the equivalent diameter refers is indicated using a suitable subscript (see ISO 9276-1:1998).

Note 2 to entry: For discrete-particle-counting, light-scattering instruments, an equivalent optical diameter is used.

Note 3 to entry: Other material constants like density of the particle are used for the calculation of the equivalent diameter like *Stokes diameter* (3.22) or sedimentation equivalent diameter. The material constants, used for the calculation, should be reported additionally.

Note 4 to entry: For inertial instruments, the aerodynamic diameter is used. Aerodynamic diameter is the diameter of a sphere of density 1 000 kg m^{-3} that has the same settling velocity as the irregular particle.

[SOURCE: ISO/TS 80004-6:2021, 4.1.5, modified — Note 1 to entry and Note 3 to entry changed.]

3.7
light scattering
change in propagation of light at the interface of two media having different optical properties

[SOURCE: ISO/TS 80004-6:2021, 4.2.5]

3.8
hydrodynamic diameter
equivalent diameter (3.6) of a *particle* (3.3) in a liquid having the same diffusion coefficient as a spherical particle with no boundary layer in that liquid

Note 1 to entry: In practice, *nanoparticles* (3.2) in solution can be non-spherical, dynamic and solvated.

© ISO 2024 – All rights reserved

Documents
Document Sharing Hub
Full document details: BS ISO 19430:2024

Note 2 to entry: A particle in a liquid will have a boundary layer. This is a thin layer of fluid or adsorbates close to the solid surface, within which shear stresses significantly influence the fluid velocity distribution. The fluid velocity varies from zero at the solid surface to the velocity of free stream flow at a certain distance away from the solid surface.

[SOURCE: ISO/TS 80004-6:2021, 4.2.6]

3.9
particle tracking analysis
PTA
method where *particles* (3.3) undergoing Brownian and/or gravitational motion in a liquid *suspension* (3.14) are illuminated by a laser and the change in position of individual particles is used to determine their *equivalent diameters* (3.6)

Note 1 to entry: Analysis of the time-dependent particle position yields the translational diffusion coefficient and hence the *hydrodynamic diameter* (3.8) using the Einstein relationship.

Note 2 to entry: Nanoparticle tracking analysis (NTA) is often used to describe PTA. NTA is a subset of PTA, since PTA covers a length range that exceeds the *nanoscale* (3.1).

3.10
nanomaterial
material with any external dimension in the *nanoscale* (3.1) or having internal structure or surface structure in the nanoscale

Note 1 to entry: See “engineered nanomaterial”, “manufactured nanomaterial” and “incidental nanomaterial” in ISO 80004-1 for definitions of certain types of nanomaterial.

Note 2 to entry: The nanoform of a material is a nanomaterial.

[SOURCE: ISO 80004-1:2023, 3.1.4, modified — Reference to ISO 80004-1 added to Note 1 to entry.]

3.11
diluent
non-volatile homogeneous liquid which is used to decrease the concentration of *particles* (3.3) in a *suspension* (3.14) without any deleterious effects such as changing particle total number, state of aggregation, *particle size* (3.4) or surface chemistry

3.12
viscosity
η
ratio between the applied shear stress and rate of shear of a liquid

Note 1 to entry: It is a measure of the resistance to flow or deformation of a liquid.

Note 2 to entry: The term "dynamic viscosity" is also used in a different context to denote a frequency-dependent quantity in which shear stress and shear rate have a sinusoidal time dependence.

[SOURCE: ISO 3104:2020, 3.2, modified — Preferred terms and Note 3 to entry have been deleted.]

3.13
dispersion
multi-phase system in which discontinuities of any state (solid, liquid or gas: discontinuous phase) are distributed in a continuous phase of a different composition or state

Note 1 to entry: This term also refers to the act or process of producing a dispersion; in this context, the term “dispersion process” should be used.

Note 2 to entry: If solid *particles* (3.3) are distributed in a liquid, the dispersion is referred to as a *suspension* (3.14). If the dispersion consists of two or more immiscible liquid phases, it is termed an “emulsion”. A suspoemulsion consists of both solid and liquid phases distributed in a continuous liquid phase.

[SOURCE: ISO/TS 80004-6:2021, 3.14]

© ISO 2024 – All rights reserved

Documents
Document Sharing Hub
Full document details: BS ISO 19430:2024

3.14
suspension
heterogeneous mixture of materials comprising a liquid and a finely dispersed solid material

[SOURCE: ISO/TS 80004-6:2021, 3.13]

3.15
simultaneous multispectral detection
SMD
method where optically scattering objects [such as *particles* (3.3) or bubbles] are detected, counted and tracked by means of *particle tracking analysis* (3.9), using light sources of different wavelengths and different powers.

Note 1 to entry: Detection, counting and tracking of objects is performed independently in each spectral regime.

3.16
total particle count method
particle (3.3) counting method in which the total number of particles in a certain sample volume is determined without classification according to size

[SOURCE: ISO 29463-4:2011, 3.2]

3.17
particle counting and sizing method
particle (3.4) counting method which allows both the determination of the number of particles and also the classification of the particles according to size

[SOURCE: ISO 29463-4:2011, 3.3]

3.18
particle number concentration
number of *particles* (3.3) per unit of volume of suspension (3.14)

3.19
number concentration distribution density
distribution density (frequency) of the *particle number concentration* (3.18) represented as a function of the *particle size* (3.4)

[SOURCE: ISO 26824:2022, 3.9.5]

3.20
limit of quantification
quantification limit
LOQ
lowest amount of an analyte that is quantifiable with a given confidence level

Note 1 to entry: The confidence level can be calculated as ten times the standard deviation of blank measurement results. This concept applies to concentration measurements only.

Note 2 to entry: The value LOQ can be used as a threshold value to assure quantitative measurement of an analyte accurately.

[SOURCE: EN 1540:2021, 5.3.5, modified — Note 2 to entry has been modified and Note 3 to entry has been deleted.]

3.21
limit of detection
LOD
lowest amount of an analyte that is detectable with a given confidence level

Note 1 to entry: The limit of detection can be calculated as three times the standard deviation of blank measurement results. This represents a probability of 50 % that the analyte will not be detected when it is present at the concentration of the LOD.

© ISO 2024 – All rights reserved

Documents
Document Sharing Hub
Full document details: BS ISO 19430:2024

Note 2 to entry: The LOD can be used as a threshold value to assert the presence of a substance with a known confidence.

Note 3 to entry: The LOD only refers to concentration measurements and not to particle sizing.

[SOURCE: EN 1540:2021, 5.3.4, modified — Note 3 added]

3.22
Stokes diameter
equivalent diameter (3.6) of a sphere that has the same buoyant density and terminal sedimentation velocity as the real *particle* (3.3) in the same liquid under creeping flow conditions

[SOURCE: ISO 26824:2022, 3.4.4]

3.23
migration velocity
absolute value of sedimentation or creaming and flotation terminal velocity

Note 1 to entry: Velocity of creaming and flotation is indicated by a negative sign.

[SOURCE: ISO 18747-1:2018, 3.3]

3.24
migration
directed *particle* (3.3) movement (sedimentation or creaming and flotation) due to acting gravitational or centrifugal fields

Note 1 to entry: Sedimentation occurs when the density of droplets or particles is larger than that of the liquid. Creaming and flotation occur when the density of droplets or particles is smaller than that of the liquid. In these two processes, particles move in opposite directions.

[SOURCE: ISO 18747-2:2019, 3.3]

3.25
analyte
element or constituent to be determined

[SOURCE: ISO 10136-2:1993, 3.3]

3.26
track
path of an object through space

3.27
frame
single static image obtained by a camera in a video recording process

Note 1 to entry: For the purpose of this document, the term "frame" does not include the edge of the *field of view* (3.31).

3.28
transparent medium
medium which has a high transmittance of light in a given spectral range

3.29
aspect ratio
ratio of length of a *particle* (3.3) to its width

[SOURCE: ISO 14966:2019, 3.7]

3.30
tracking
process of obtaining a *track* (3.26) in *x* and *y* coordinates

© ISO 2024 – All rights reserved

Documents
Document Sharing Hub
Full document details: BS ISO 19430:2024

3.31
field of view
area viewed by the imaging probing system

[SOURCE: ISO 10360-7:2011, 3.3]

4 Symbols and abbreviated terms

For the purposes of this document, the following symbols and abbreviated terms apply.

CCD	charge coupled device	
CMOS	complementary metal oxide semiconductor	
CRMs	certified reference materials	
DLS	dynamic light scattering	
MSD	mean square distance	
d_h	hydrodynamic diameter	m
d_s	Stokes diameter	m
v	terminal velocity	$m \cdot s^{-1}$
g	gravitational acceleration	~9,8 $m \cdot s^{-2}$
ρ	apparent density of the particle	$kg \cdot m^{-3}$
ρ_0	density of the liquid	$kg \cdot m^{-3}$
D_x	translational diffusion coefficient in 1 dimension	$m^2 s^{-1}$
D_{xy}	translational diffusion coefficient in 2 dimensions	$m^2 s^{-1}$
D_{xyz}	translational diffusion coefficient in 3 dimensions	$m^2 s^{-1}$
η	viscosity of the suspension medium	$N \cdot s \cdot m^{-2}$
k_B	Boltzmann's constant	$N \cdot m \cdot K^{-1}$
T	absolute temperature	K
t	time	s
$\overline{(x)^2}$	mean square displacement in 1 dimension	m^2
$\overline{(x,y)^2}$	mean square displacement in 2 dimensions	m^2
$\overline{(x,y,z)^2}$	mean square displacement in 3 dimensions	m^2
C	total particle number concentration	m^{-3}
N	total particle number in a sampling volume	
V_s	sensing volume	m^3
$\boldsymbol{N}_o$	array of values containing original total number of particles in size-bins before sample dilution	

© ISO 2024 – All rights reserved

Documents
Document Sharing Hub
Full document details: BS ISO 19430:2024

$\boldsymbol{c}_s$	array of values containing PTA results as number of particles per unit volume in size-bins	m^{-3}
V_d	volume of diluent used	m^3
V_o	original volume of the dispersion before dilution	m^3
$\boldsymbol{c}_d$	array of values containing diluent number of particles per unit volume in size-bins	m^{-3}
$\boldsymbol{c}_o$	array of values containing original number of particles per unit volume in size-bins before sample dilution	m^{-3}
Re	Reynolds number	

5 Principles

5.1 General

In general, PTA can be used to detect, size and count individual particles, droplets or bubbles through Brownian motion or gravitational fall particle dynamics. Historically, only Brownian motion was used for particle size determination and construction of number-based particle size distribution. However, this document covers all known particle tracking methods, thus including gravitational fall. This document is focused on particle sizing, particle counting, particle number concentration and constructing number-based particle size distribution.

NOTE This document is applicable to particles, droplets and bubbles in liquid dispersions which are referred to in the text as particles.

5.2 Measurement types

5.2.1 General

Determination of particle size distribution by PTA commonly makes use of:

— Brownian motion of particles, or

— the gravitational fall or floating of particles, or

— both of the above

combined with the light scattering properties of particles suspended in liquids.

Irradiation of the sample (typically by means of one or several laser beam(s) of wavelength(s) in the visible region) leads to light scattering by objects with a refractive index that is different from that of the surrounding medium. Light scattered from each particle is collected by magnifying optics and visualized by way of a suitable camera, equipped with a charge coupled device (CCD) or complementary metal oxide semiconductor (CMOS) sensor. By recording a series of sequential images, the instrument's software tracks positions of particles as a function of time, allowing analysis of their movement.

By tracking individual particles undergoing Brownian motion[3],[4] or gravitational migration (see ISO 13317-1) from frame to frame, the average spatial displacement of the particles per unit time can be calculated. This displacement can be related to the hydrodynamic diameter of the particles through the Einstein equation[5] or through Stokes law for gravitational migration of particles.

NOTE In practice, the particles are either tracked in Brownian motion regime or in gravitational migration regime.

© ISO 2024 – All rights reserved

Documents
Document Sharing Hub
Full document details: BS ISO 19430:2024

PTA instruments use a dark field imaging configuration, with the optical capture axis (Figure 1) commonly oriented vertically (a) or horizontally (b).

A broad range of particle sizes in a dispersion must be detected, sized and counted for the context of this document. Different methods are used to effectively extend the size range of the PTA method. The size working range of the method is often determined by the geometry of the instrument as well as data processing steps, properties of the optical system, the size and optical properties of the particles. There are a number of publications outlining optimum data processing methods used for track analysis (see ASTM E2834-12 and Reference [6]) but their use varies from one manufacturer to another.

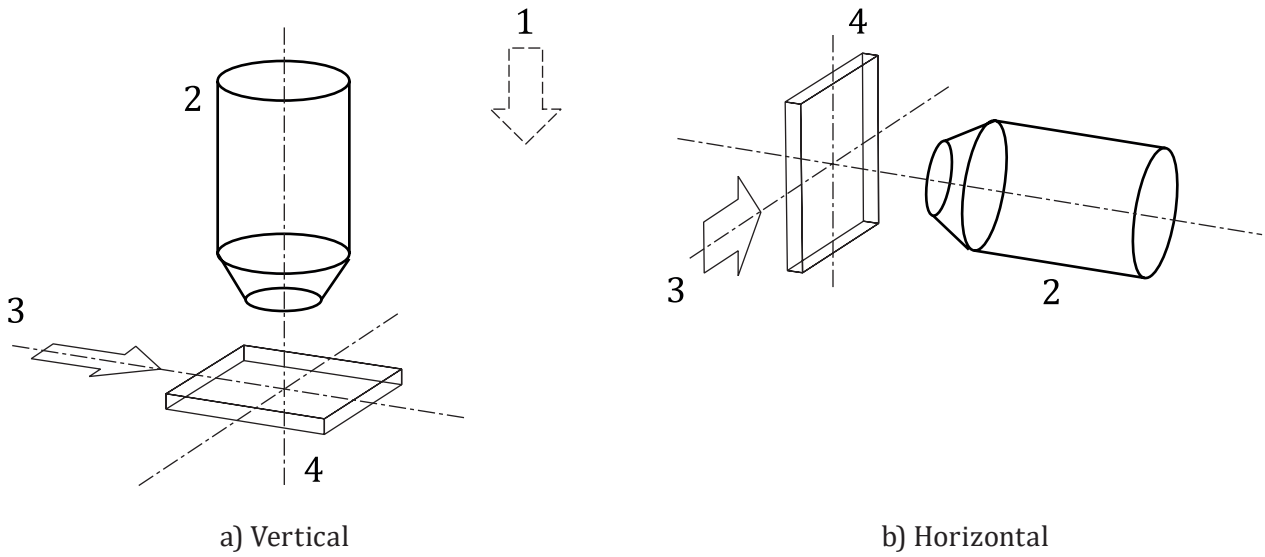

Key

1 direction of gravity

2 is optical capture

3 illumination

4 sample volume

Figure 1 — PTA configurations

The illumination may be provided by a single wavelength laser or a number of lasers with different wavelengths and power settings, allowing for wider particle size distribution and polydispersity in the sample. Detailed requirements for PTA instruments are outlined in Clause 6. Table 1 summarises the availability of measurements in various instrument geometries.

Table 1 — Summary of instrument configurations and capabilities

	Vertical [Figure 1 a)]	Horizontal [Figure 1 b)]
Single laser	Available	Available
Multiple laser (SMD)	Not known to exist	Available
Gravitational tracking	Not possible	Available

Both horizontal and vertical system geometries are available with a single laser, while no vertically orientated instruments are known to exist for multiple laser illumination. Gravitational fall tracking can only be implemented in horizontal geometries [Figure 1 b)].

5.2.2 Particle detection

The scattering from particles in a dispersion are detected by imaging them in a dark-field mode under a microscope which provides a quantifiable magnification. Once a microscope is combined with a camera, this magnification shall be calibrated. This is important for evaluation of several length measurements such as

© ISO 2024 – All rights reserved

Documents
Document Sharing Hub
Full document details: BS ISO 19430:2024