BS ISO 19682:2023

BSI Standards Publication

Furniture — Tables — Test methods for the determination of stability, strength and durability

Documents
Document Sharing Hub

Full document details: BS ISO 19682:2023

National foreword

This British Standard is the UK implementation of ISO 19682:2023.

The UK participation in its preparation was entrusted to Technical Committee FW/0/2, Domestic and Contract Furniture.

A list of organizations represented on this committee can be obtained on request to its committee manager.

Contractual and legal considerations

This publication has been prepared in good faith, however no representation, warranty, assurance or undertaking (express or implied) is or will be made, and no responsibility or liability is or will be accepted by BSI in relation to the adequacy, accuracy, completeness or reasonableness of this publication. All and any such responsibility and liability is expressly disclaimed to the full extent permitted by the law.

This publication is provided as is, and is to be used at the recipient's own risk.

The recipient is advised to consider seeking professional guidance with respect to its use of this publication.

This publication is not intended to constitute a contract. Users are responsible for its correct application.

© The British Standards Institution 2024
Published by BSI Standards Limited 2024

ISBN 978 0 539 13940 2

ICS 97.140

Compliance with a British Standard cannot confer immunity from legal obligations.

This British Standard was published under the authority of the Standards Policy and Strategy Committee on 31 May 2024.

Amendments/corrigenda issued since publication

Date	Text affected

Documents
Document Sharing Hub

Full document details: BS ISO 19682:2023

INTERNATIONAL STANDARD

ISO 19682

First edition
2023-07

Furniture — Tables — Test methods for the determination of stability, strength and durability

Ameublement — Tables — Méthodes d'essai pour la détermination de la stabilité, de la résistance et de la durabilité

Reference number
ISO 19682:2023(E)

Documents
Document Sharing Hub
© ISO 2023

Full document details: BS ISO 19682:2023

COPYRIGHT PROTECTED DOCUMENT

© ISO 2023

All rights reserved. Unless otherwise specified, or required in the context of its implementation, no part of this publication may be reproduced or utilized otherwise in any form or by any means, electronic or mechanical, including photocopying, or posting on the internet or an intranet, without prior written permission. Permission can be requested from either ISO at the address below or ISO's member body in the country of the requester.

ISO copyright office
CP 401 • Ch. de Blandonnet 8
CH-1214 Vernier, Geneva
Phone: +41 22 749 01 11
Email: copyright@iso.org
Website: www.iso.org

Published in Switzerland

© ISO 2023 – All rights reserved

Documents
Document Sharing Hub

Full document details: BS ISO 19682:2023

Contents

Page

Foreword ... **v**
Introduction ... **vi**
1 Scope ... **1**
2 Normative references ... **1**
3 Terms and definitions ... **1**
4 General test conditions ... **2**
4.1 Preliminary preparations ... 2
4.2 Application of forces ... 3
4.3 Tolerances ... 3
5 Test equipment and apparatus ... **3**
6 Test procedures – strength and durability ... **6**
6.1 General ... 6
6.2 Horizontal static load test ... 6
6.3 Vertical static load tests ... 11
6.3.1 Vertical static load on main surface ... 11
6.3.2 Additional vertical static load test where the main surface has a length > 1 600 mm ... 12
6.3.3 Vertical static load on end extension ... 13
6.4 Horizontal durability and stiffness test ... 14
6.4.1 General ... 14
6.4.2 Horizontal durability test ... 15
6.4.3 Stiffness of the structure ... 19
6.5 Vertical durability test ... 20
6.6 Vertical impact test ... 20
6.6.1 General ... 20
6.6.2 Vertical impact test for all other table tops ... 21
6.7 Deflection of table tops ... 21
6.8 Durability of tables with castors ... 22
6.9 Drop test ... 22
6.10 Table top-to-leg assembly strength ... 23
7 Test procedures – stability ... **28**
7.1 General ... 28
7.2 Stability under vertical load ... 28
7.2.1 General ... 28
7.2.2 Test for tables that are or can be set to a height of 950 mm or less ... 28
7.2.3 Test for tables that are or can be set to a height greater than 950 mm ... 29
7.3 Stability for tables with extension elements (drawers) ... 29
7.4 Stability of tables designed to support a parasol ... 29
7.5 Horizontal stability test for tables with castors ... 30
7.6 Force stability test for tall products ... 31
8 Test procedures – height adjustment mechanism ... **33**
8.1 General ... 33
8.2 Durability of height adjustment mechanism ... 33
9 Tilting top table — cycle test ... **35**
9.1 Test setup ... 35
9.2 Test procedure ... 36
10 Tilting top table – latch strength test ... **36**
10.1 Test setup ... 36
10.2 Test procedure ... 36
11 Test report format ... **37**

AVA Documents
Document Sharing Hub

© ISO 2023 – All rights reserved

Full document details: BS ISO 19682:2023

Annex A (informative) **Guidance for the choice of loads, cycles, etc. for table and desk furniture strength, durability, and stability tests** **39**

Annex B (informative) **Purpose and applicability** **44**

© ISO 2023 – All rights reserved

Documents
Document Sharing Hub

Full document details: BS ISO 19682:2023

Foreword

ISO (the International Organization for Standardization) is a worldwide federation of national standards bodies (ISO member bodies). The work of preparing International Standards is normally carried out through ISO technical committees. Each member body interested in a subject for which a technical committee has been established has the right to be represented on that committee. International organizations, governmental and non-governmental, in liaison with ISO, also take part in the work. ISO collaborates closely with the International Electrotechnical Commission (IEC) on all matters of electrotechnical standardization.

The procedures used to develop this document and those intended for its further maintenance are described in the ISO/IEC Directives, Part 1. In particular, the different approval criteria needed for the different types of ISO document should be noted. This document was drafted in accordance with the editorial rules of the ISO/IEC Directives, Part 2 (see www.iso.org/directives).

ISO draws attention to the possibility that the implementation of this document may involve the use of (a) patent(s). ISO takes no position concerning the evidence, validity or applicability of any claimed patent rights in respect thereof. As of the date of publication of this document, ISO had not received notice of (a) patent(s) which may be required to implement this document. However, implementers are cautioned that this may not represent the latest information, which may be obtained from the patent database available at www.iso.org/patents. ISO shall not be held responsible for identifying any or all such patent rights.

Any trade name used in this document is information given for the convenience of users and does not constitute an endorsement.

For an explanation of the voluntary nature of standards, the meaning of ISO specific terms and expressions related to conformity assessment, as well as information about ISO's adherence to the World Trade Organization (WTO) principles in the Technical Barriers to Trade (TBT), see www.iso.org/iso/foreword.html.

This document was prepared by Technical Committee ISO/TC 136, *Furniture*.

This document cancels and replaces ISO 21016:2007, which has been technically revised.

The main changes are as follows:

— the scope has been broadened to cover not only office furniture.

Any feedback or questions on this document should be directed to the user's national standards body. A complete listing of these bodies can be found at www.iso.org/members.html.

© ISO 2023 – All rights reserved

Documents
Document Sharing Hub
Full document details: BS ISO 19682:2023

Introduction

This document is a proposal for test methods for stability, strength and durability for table and desk furniture. Safety aspects (e.g. resistance to heat and electric shock) of electrically motorized furniture are additionally covered by IEC 60335-2-116.

Other methods for determination of the strength and durability of storage components, seating surfaces, and other features which can be incorporated into tables are covered by other standards.

This document specifies test methods only. It does not specify acceptance criteria. These should be specified in a document for general requirements. If this is not available, suggested loads and cycles can be found in Annex A. It is up to the specifier to determine which tests are appropriate.

Tests carried out according to these test methods are intended to demonstrate the ability of the item to give satisfactory service in its intended environment. The tests have been developed for units/components that have not been in use. However, when properly justified, they can be used for fault investigation.

© ISO 2023 – All rights reserved
Documents
Document Sharing Hub
Full document details: BS ISO 19682:2023

Furniture — Tables — Test methods for the determination of stability, strength and durability

1 Scope

This document specifies test methods for the determination of stability, strength and durability of the structure of all types of tables and desks without regard to use, materials, design/construction or manufacturing process.

This document does not apply to baby changing units.

This document does not cover test methods for the assessment of ageing, degradation, flammability or electrical components.

2 Normative references

The following documents are referred to in the text in such a way that some or all of their content constitutes requirements of this document. For dated references, only the edition cited applies. For undated references, the latest edition of the referenced document (including any amendments) applies.

ISO 48-4, *Rubber, vulcanized or thermoplastic — Determination of hardness — Part 4: Indentation hardness by durometer method (Shore hardness)*

ISO 2439, *Flexible cellular polymeric materials — Determination of hardness (indentation technique)*

ISO 7170:2021, *Furniture — Storage units — Test methods for the determination of strength, durability and stability*

ISO 12543-4, *Glass in building — Laminated glass and laminated safety glass — Part 4: Test methods for durability*

3 Terms and definitions

For the purposes of this document, the following terms and definitions apply.

ISO and IEC maintain terminology databases for use in standardization at the following addresses:

— ISO Online browsing platform: available at https://www.iso.org/obp

— IEC Electropedia: available at https://www.electropedia.org/

3.1
duty cycle
length of time the height adjustable table's drive system may be operated without impairing its useful life

3.2
end extension
added surface beyond the original surface that is not directly supported by the floor and adds 200 mm or more to an end

© ISO 2023 – All rights reserved

Documents
Document Sharing Hub
Full document details: BS ISO 19682:2023

3.3
levelling device
device whose primary function is to keep the table top horizontal

EXAMPLE Adjustable feet, glide, or similar with a limitation of 40 mm of vertical range.

3.4
main surface
surface that is not a shelf

3.5
safety glass
glass with additional features that make it less likely to break, or less likely to pose a threat when broken

3.6
secondary surface
surface that is vertically separated from, and smaller than, the *main surface* (3.4) and used for storage or occupied exclusively by the equipment placed on the surface

EXAMPLE Shelf.

3.7
structure
load bearing parts of furniture

EXAMPLE Frame, top and legs.

3.8
type 1 table
table having a *main surface* (3.4) 600 mm or more above the floor surface and a surface area greater than 0,50 m^2

3.9
type 2 table
table that is not a *type 1 table* (3.8)

4 General test conditions

4.1 Preliminary preparations

The furniture shall be tested as delivered. Knock-down furniture shall be assembled according to the instructions supplied with it. If the instructions allow the furniture to be assembled or combined in different ways, the most adverse combination shall be used for each test. Knock-down fittings shall be tightened before testing. Further tightening shall not take place unless specifically required by the manufacturer.

During testing, the unit shall be placed on the floor and levelled, unless otherwise specified. Levelling devices shall be set to the mid position but not more than 13 mm from fully closed.

Products with adjustable features shall be set at their most adverse position for testing unless otherwise specified.

Unless otherwise specified by the manufacturer, the sample for test shall be stored in indoor ambient conditions for at least 24 h immediately prior to testing. The tests shall be carried out at indoor ambient conditions, but if during a test the temperature is outside the range of 15 °C to 27 °C, the maximum and/or minimum temperature shall be recorded in the test report. The test for deflection of table tops (see 6.7), except those made from metal, glass and stone, shall be carried out at a relative humidity of 45 % to 55 %. If during a test the relative humidity is outside of the range of 45 % to 55 %, the maximum and/or minimum humidity shall be recorded in the test report.

© ISO 2023 – All rights reserved
Documents
Document Sharing Hub
Full document details: BS ISO 19682:2023

If a test cannot be carried out as specified (e.g. because a loading pad cannot be used for the application of a force due to the design of a product), the test shall be carried out as closely as possible to that specified. Any modification to the test method shall be technically justified and shall be recorded in the test report.

Before beginning the testing, visually inspect the unit thoroughly. Record any defects so that they are not assumed to have been caused by the tests. Carry out measurements, if specified.

It is not necessary that all tests be carried out on the same unit, but all tests specified for a particular component shall be carried out on the same component.

4.2 Application of forces

The test forces in durability and static load tests shall be applied sufficiently slowly to ensure that a negligible dynamic load is applied. Unless otherwise specified, each static load shall be maintained for not less than 10 s and not more than 15 s. The forces in durability tests shall be applied sufficiently slowly to ensure that kinetic heating does not occur. Unless otherwise stated, durability loads shall be maintained for (2 ± 1) s.

Forces shall be applied in a manner which ensures normal functioning of self-closing and damping mechanisms.

The forces may be replaced by masses. The relationship 10 N = 1 kg shall be used.

4.3 Tolerances

Unless otherwise stated, the following tolerances are applicable to the test equipment:

— forces: ±5 % of the nominal force;

— masses: ±1 % of the nominal mass;

— dimensions: ±1 mm of the nominal dimension; except loading pads ±5 mm of the nominal dimension; for dimensions greater than 200 mm, the tolerance shall be ±0,5 % of the dimension;

— angles: ±2° of the nominal angle;

— the accuracy for the positioning of loading pads and impact plates shall be ±5 mm.

Test masses, forces, dimensions, angles, times, rates and velocities used to perform the tests shall be targeted at the nominal values specified.

NOTE For the purposes of uncertainty measurement, test results are not considered to be adversely affected when the above tolerances are met.

5 Test equipment and apparatus

5.1 Unless otherwise stated, the tests may be applied by any suitable device because the results are not dependent upon the apparatus, except in the case of impact tests where the apparatus described in 5.1 shall be used.

The equipment shall not inhibit deformation nor cause unnatural deformation of the unit/component, i.e. it shall be able to move so that it can follow the deformation of the unit/component during testing.

With the exception of the horizontal static, durability and stiffness tests, described in 6.2 and 6.4, all loading pads shall be capable of pivoting in relation to the direction of the applied force and the pivot point shall be as close as practically possible to the load surface.

Loading pads for the horizontal static, durability and stiffness tests described in 6.2 and 6.4, shall not pivot.

Documents
Document Sharing Hub

© ISO 2023 – All rights reserved

Full document details: BS ISO 19682:2023

With the exception of the horizontal static, durability and stiffness tests described in 6.2 and 6.4, if a loading pad tends to slide, use a slip resistant material between the loading pad and the surface being tested.

5.2 Vertical impactor, as shown in Figure 1 and comprised of the components specified in 5.2.1 to 5.2.3.

5.2.1 Circular body, 200 mm in diameter separated from the striking surface by helical compression springs and free to move relative to it on a line perpendicular to the plane of the central area of the striking surface.

The body and associated parts minus the springs shall have a mass of (17 ± 0,1) kg and the whole apparatus, including mass, springs and striking surface, shall have a mass of (25 ± 0,1) kg.

5.2.2 Springs, which shall be such that the nominal spring rate of the combined spring system is (7 ± 2) N/mm and the total friction resistance of the moving parts is less than 1 N.

The spring system shall be compressed to an initial load of (1 040 ± 5) N (measured statically) and the amount of spring compression movement available from the initial compression point to the point where the springs become fully closed shall be not less than 60 mm.

© ISO 2023 – All rights reserved
Documents
Document Sharing Hub
Full document details: BS ISO 19682:2023

5.2.3 Striking surface, which shall be a rigid circular object, 200 mm in diameter, the face of which has a convex spherical curvature of (300 ± 5) mm radius with a 12 mm front edge radius.

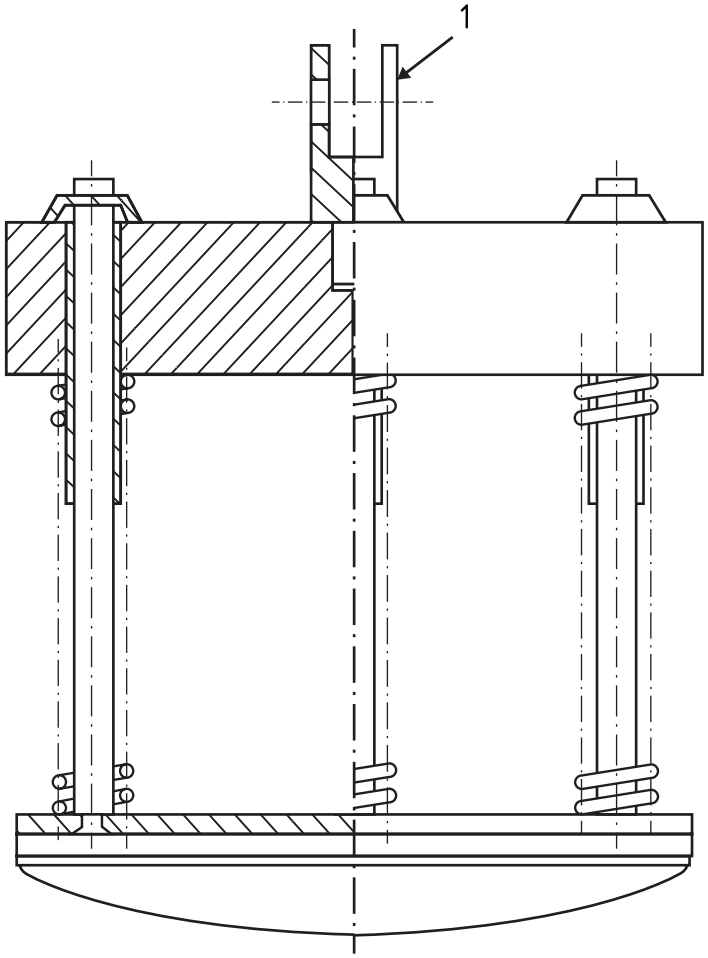

Key

1 joint of lifting device not inhibiting free fall

Figure 1 — Vertical impactor

5.3 Floor, horizontal, flat and rigid with a smooth surface.

For the drop test (6.9) the floor shall be faced with a 2 mm thick layer of rubber with a hardness of (85 ± 15) IRHD according to ISO 48-4 or a steel plate with a minimum thickness of 5 mm, placed directly on the floor.

5.4 Stops, to prevent the article from sliding but not tilting, no higher than 12 mm except in cases where the design of the item necessitates the use of higher stops.

5.5 Loading pad, a rigid cylindrical object, 100 mm in diameter, with a flat, smooth face and a 12 mm edge radius.

5.6 Foam, 25 mm thick layer of flexible foam with a bulk density of (120 ± 25) kg/m^3.

5.7 Steel test tube, (18 ± 1,5) mm in diameter and (1,5 ± 0,5) mm in wall thickness with a length such that a force can be applied at a distance of 2 200 mm above the floor.

© ISO 2023 – All rights reserved

Documents
Document Sharing Hub
Full document details: BS ISO 19682:2023

5.8 Test surface for castor durability test, horizontal, flat smooth and rigid steel surface.

5.9 Obstacles for castor durability test, steel strips 50 mm wide and 3,2 mm high with the top edges having a radius of 3,2 mm, 500 mm apart and parallel on the floor surface and perpendicular to the test direction.

5.10 Test foam for glass, which shall be a foam sheet with a thickness of 100 mm, a bulk density of (35 ± 5) kg/m^3 and an indentation hardness index of (170 ± 40) N HA (40 %/30 s) in accordance with ISO 2439.

6 Test procedures – strength and durability

6.1 General

Unless otherwise specified, the tests shall be carried out in the configuration most likely to cause failure.

NOTE There can be multiple configurations likely to cause failure. Multiple test configurations can be required.

Where the table top can be extended or enlarged, then the extended configuration shall be considered most likely to cause failure and tested as extended unless specified otherwise. In this case, the extended configuration is considered to be the main surface except for end extensions. If a test cannot be carried out as specified, the test shall be carried out as closely as possible to that specified. Any modification to the test method shall be technically justified and shall be recorded in the test report.

If a table has storage components (secondary surfaces), then all the applicable tests in this document shall be conducted, unless specified otherwise, by using the loads in accordance with ISO 7170:2021, Table 1.

6.2 Horizontal static load test

Position the table on the test surface, in its normal position of use without extending end extensions.

Height adjustable tables shall be set to their highest position, but not to exceed 950 mm. Restrain the base of the table by stops placed in all directions at the opposite end to that at which the horizontal test force is first to be applied.

Apply a 50 kg mass to an area of (300 ± 50) mm × (300 ± 50) mm, or a diameter of (300 ± 50) mm, to the approximate centre of the table top. See Figure 2 for recommended examples of load placement.

For type 2 tables, apply the 50 kg mass or the manufacturer's recommended maximum but no less than 25 kg.

For vertical flat edge tops (no profile-edge), apply the specified horizontal force by means of a loading pad (5.5) centred within 10 mm of the table top level (see Figure 3) in a direction perpendicular to a line joining the two legs/supports, midway between the legs/supports of the side of the applied force. See Figures 2 a), c), e), g) and i). For tops without a vertical edge (profile-edge), apply the load with the loading pad centred at the outermost edge even if more than 10 mm from the top (see Figure 3).

If the table top is not secured to the understructure and the top moves when the specified force is applied, reduce the force sufficiently to just prevent movement. Record the force applied. The applied force shall not be reduced below the specified minimum force.

If the unrestrained portion of the base lifts when the specified force is applied, reduce the force sufficiently to just prevent lifting. Record the force applied. The applied force shall not be reduced below the specified minimum force. If unrestrained portion of the base lifts at this force, the specified mass applied to the table top shall be increased gradually until this tendency ceases.

© ISO 2023 – All rights reserved
Documents
Document Sharing Hub
Full document details: BS ISO 19682:2023

Leaving the stops in position, use the same procedure to determine the force to be applied in the opposite direction.

One application of the force in each direction represents one cycle. Repeat the load application for a total of 10 cycles.

Repeat the test method applying the specified horizontal force at the work top level along the line joining the two legs/supports. See Figures 2 b), d), f), h) and j).

Apply the same force in the opposite direction.

One application of the force in each direction represents one cycle. Repeat the load application for a total of 10 cycles.

Repeat this procedure until each unique leg design/construction has been tested.

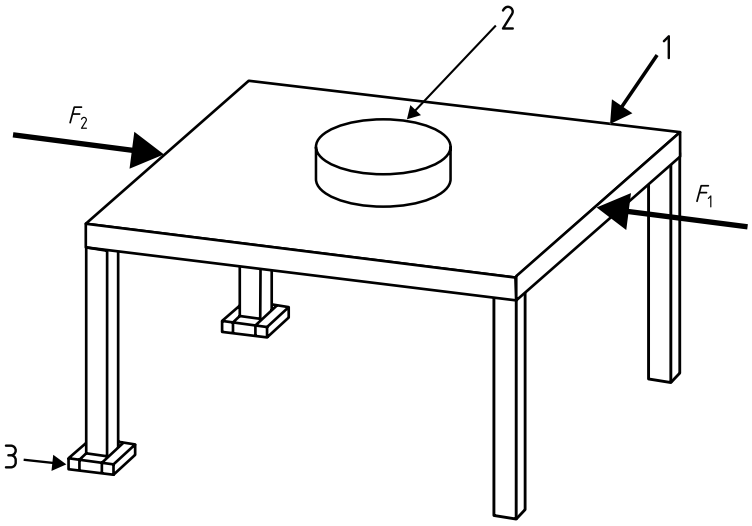

a) Rectangular table – first and second directions

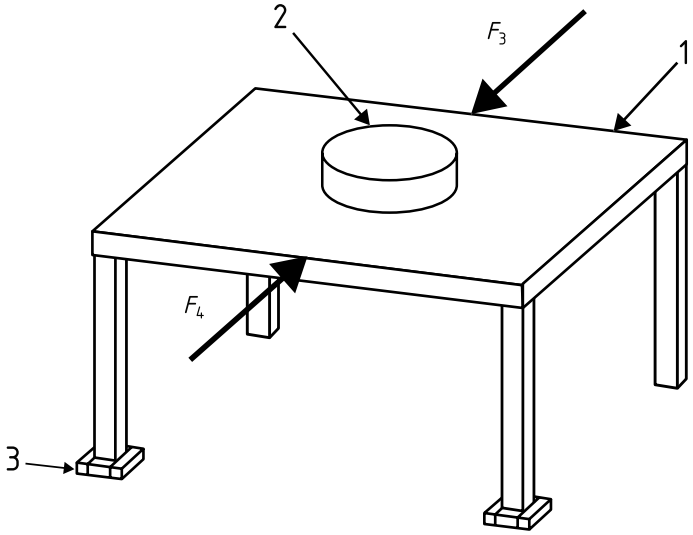

b) Rectangular table – third and fourth directions

© ISO 2023 – All rights reserved

Documents
Document Sharing Hub
Full document details: BS ISO 19682:2023

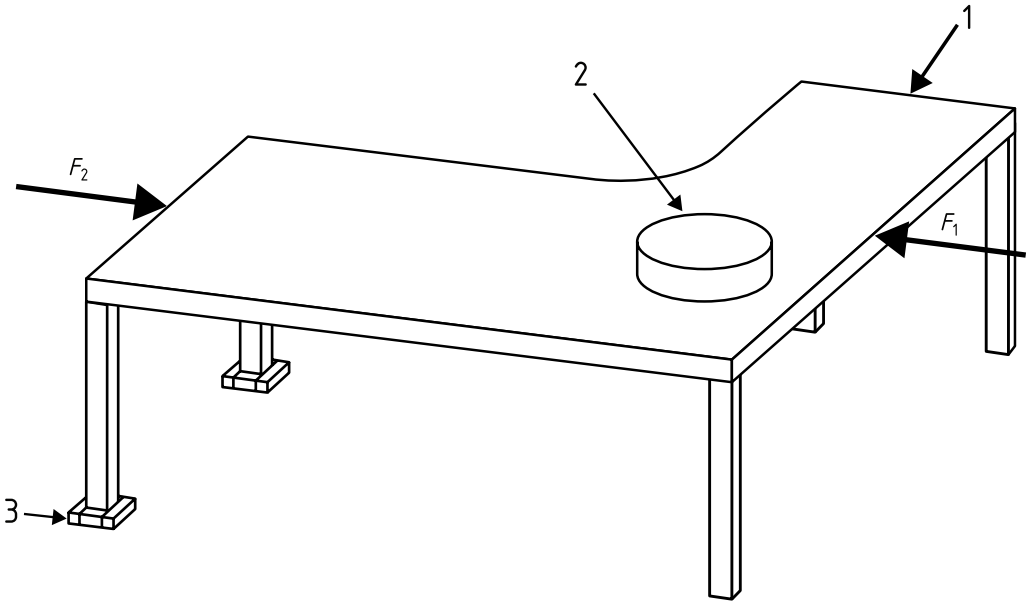

c) Irregular shape table - first and second directions

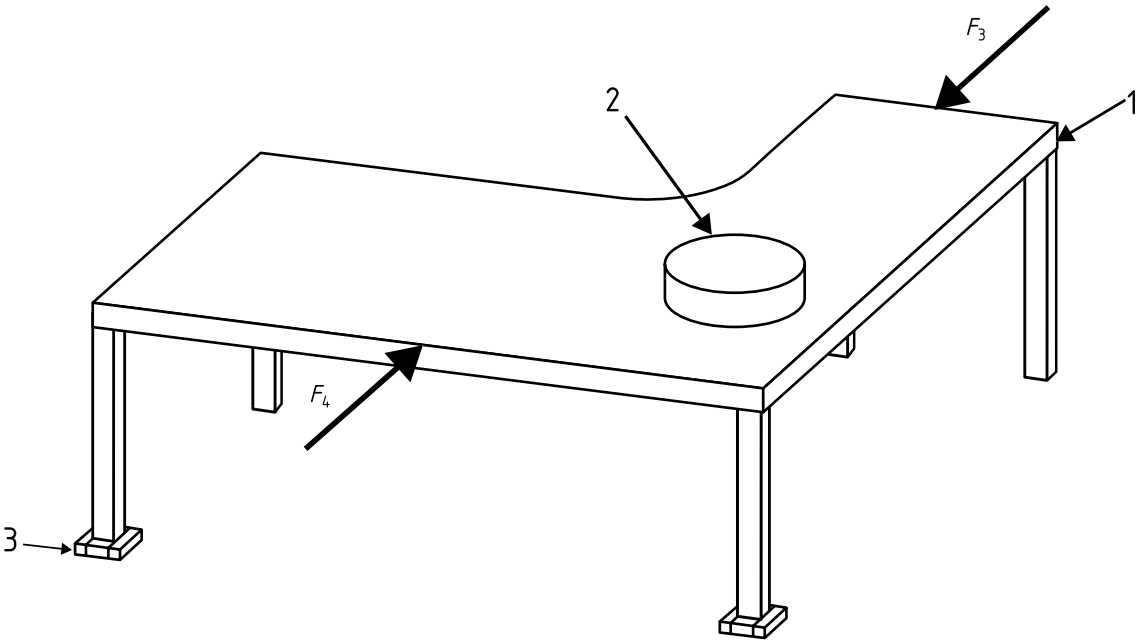

d) Irregular shape table - third and fourth directions

© ISO 2023 – All rights reserved
Documents
Document Sharing Hub
Full document details: BS ISO 19682:2023

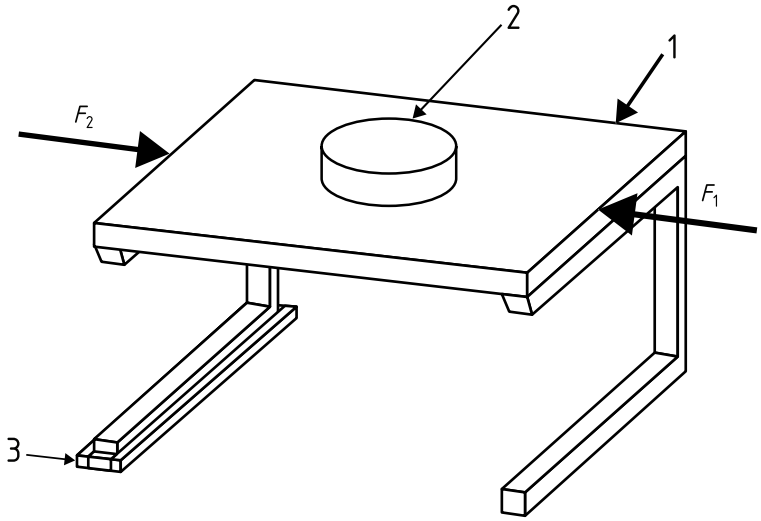

e) Cantilever table – first and second directions

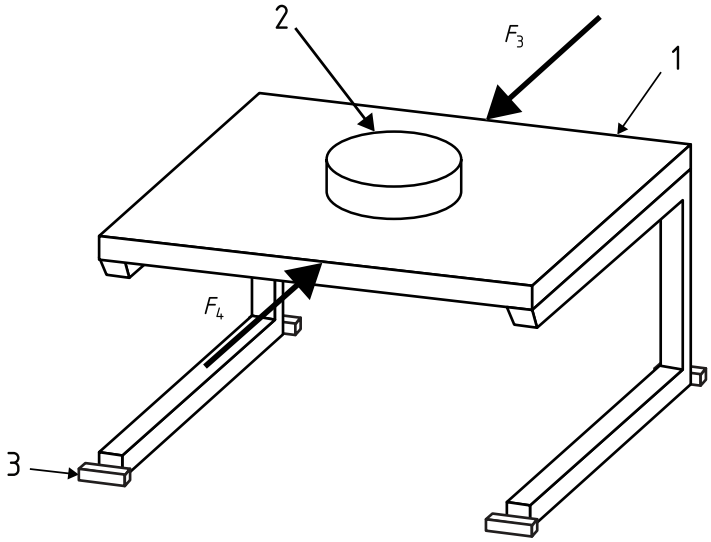

f) Cantilever table – third and fourth directions

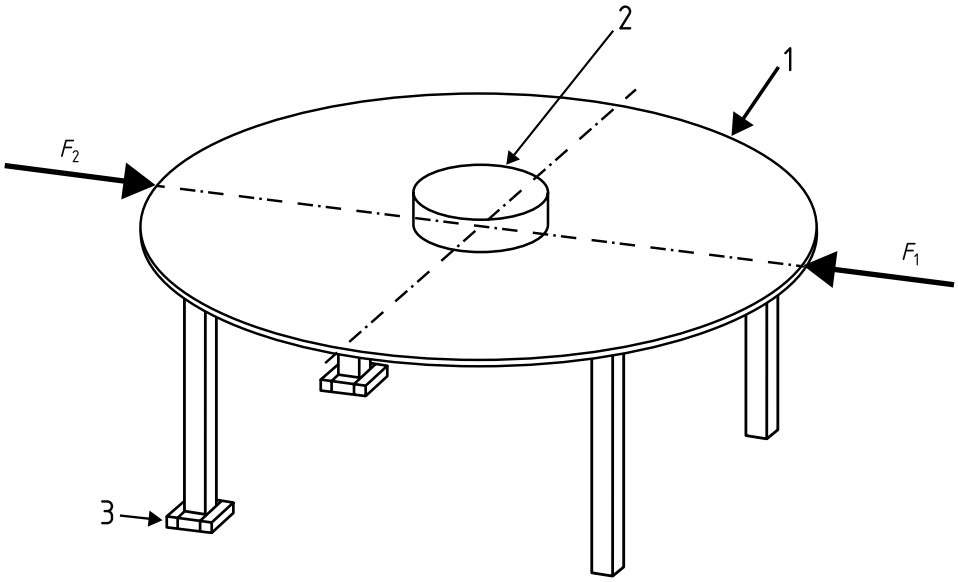

g) Oval/round table – first and second directions

© ISO 2023 – All rights reserved

Documents
Document Sharing Hub
Full document details: BS ISO 19682:2023