BS ISO 19744:2020

BSI Standards Publication

Test conditions for numerically controlled broaching machines — Testing of accuracy — Vertical surface type broaching machines

Documents
Document Sharing Hub

Full document details: BS ISO 19744:2020

National foreword

This British Standard is the UK implementation of ISO 19744:2020.

The UK participation in its preparation was entrusted to Technical Committee MTE/1/2, Machine tools - Accuracy.

A list of organizations represented on this committee can be obtained on request to its secretary.

This publication does not purport to include all the necessary provisions of a contract. Users are responsible for its correct application.

© The British Standards Institution 2020
Published by BSI Standards Limited 2020

ISBN 978 0 539 06038 6

ICS 25.040.20; 25.080.30

Compliance with a British Standard cannot confer immunity from legal obligations.

This British Standard was published under the authority of the Standards Policy and Strategy Committee on 29 February 2020.

Amendments/corrigenda issued since publication

Date	Text affected

Documents
Document Sharing Hub

Full document details: BS ISO 19744:2020

INTERNATIONAL STANDARD

ISO 19744

First edition
2020-02

Test conditions for numerically controlled broaching machines — Testing of accuracy — Vertical surface type broaching machines

Conditions d'essai des machines à brocher à commande numérique — Contrôle de l'exactitude — Machines verticales à brocher

Reference number
ISO 19744:2020(E)

Documents
Document Sharing Hub

© ISO 2020

Full document details: BS ISO 19744:2020

COPYRIGHT PROTECTED DOCUMENT

© ISO 2020

All rights reserved. Unless otherwise specified, or required in the context of its implementation, no part of this publication may be reproduced or utilized otherwise in any form or by any means, electronic or mechanical, including photocopying, or posting on the internet or an intranet, without prior written permission. Permission can be requested from either ISO at the address below or ISO's member body in the country of the requester.

ISO copyright office
CP 401 • Ch. de Blandonnet 8
CH-1214 Vernier, Geneva
Phone: +41 22 749 01 11
Fax: +41 22 749 09 47
Email: copyright@iso.org
Website: www.iso.org

Published in Switzerland

© ISO 2020 – All rights reserved

Documents
Document Sharing Hub

Full document details: BS ISO 19744:2020

Contents

Page

Foreword ..... **iv**
Introduction ..... **v**
1 Scope **1**
2 Normative references **1**
3 Terms and definitions **2**
4 Terminology and designation of axes **2**
5 Preliminary remarks **4**
5.1 Measurement units 4
5.2 Reference to the ISO 230 series 4
5.3 Testing sequence 5
5.4 Tests to be performed 5
5.5 Tolerances and minimum tolerance 5
5.6 Measuring instruments 5
5.7 Diagrams 5
5.8 Software compensation 6
5.9 Axes not under test 6
6 Geometric tests **7**
6.1 Straightness errors of linear motions 7
6.2 Squareness/Parallelism errors between linear/rotary motions 8
6.3 Table and work holding rotary axis 16
6.4 Broach holder 18
7 Accuracy and repeatability of positioning tests **25**
7.1 Positioning of numerically controlled linear axes 25
7.2 Positioning of numerically controlled rotary axes 27
8 Machining tests **29**
Annex A (informative) **Terms in other languages** **30**
Annex B (informative) **Recommended tests for surface broaching operation** **31**
Bibliography **44**

© ISO 2020 – All rights reserved

Documents
Document Sharing Hub
Full document details: BS ISO 19744:2020

Foreword

ISO (the International Organization for Standardization) is a worldwide federation of national standards bodies (ISO member bodies). The work of preparing International Standards is normally carried out through ISO technical committees. Each member body interested in a subject for which a technical committee has been established has the right to be represented on that committee. International organizations, governmental and non-governmental, in liaison with ISO, also take part in the work. ISO collaborates closely with the International Electrotechnical Commission (IEC) on all matters of electrotechnical standardization.

The procedures used to develop this document and those intended for its further maintenance are described in the ISO/IEC Directives, Part 1. In particular, the different approval criteria needed for the different types of ISO documents should be noted. This document was drafted in accordance with the editorial rules of the ISO/IEC Directives, Part 2 (see www.iso.org/directives).

Attention is drawn to the possibility that some of the elements of this document may be the subject of patent rights. ISO shall not be held responsible for identifying any or all such patent rights. Details of any patent rights identified during the development of the document will be in the Introduction and/or on the ISO list of patent declarations received (see www.iso.org/patents).

Any trade name used in this document is information given for the convenience of users and does not constitute an endorsement.

For an explanation of the voluntary nature of standards, the meaning of ISO specific terms and expressions related to conformity assessment, as well as information about ISO's adherence to the World Trade Organization (WTO) principles in the Technical Barriers to Trade (TBT) see www.iso.org/iso/foreword.html.

This document was prepared by Technical Committee ISO/TC 39, *Machine tools*, Subcommittee SC 2, *Test conditions for metal cutting machine tools*.

Any feedback or questions on this document should be directed to the user's national standards body. A complete listing of these bodies can be found at www.iso.org/members.html.

A list of all parts in the ISO series can be found on the ISO website.

NOTE In addition to the terms used in official ISO languages (English, French, Russian), this document gives the equivalent terms in the Italian and Persian languages. These are published under the responsibility of the national member bodies for Italy (UNI) and Iran (ISIRI). However, only the terms given in the official languages can be considered as ISO terms.

© ISO 2020 – All rights reserved
Documents
Document Sharing Hub
Full document details: BS ISO 19744:2020

Introduction

Most numerically controlled broaching machines are classified into two categories characterized by their particular configuration:

1) vertical surface type machines;

2) horizontal surface type machines.

The main application of numerically controlled surface type broaching machines is for generating slots and grooves in turbine disks.

The object of this document is to supply information as wide and comprehensive as possible on tests on numerically controlled broaching machines which can be carried out for comparison, acceptance, maintenance or any other purposes.

© ISO 2020 – All rights reserved

Documents
Document Sharing Hub

Full document details: BS ISO 19744:2020

Documents
Document Sharing Hub

Test conditions for numerically controlled broaching machines — Testing of accuracy — Vertical surface type broaching machines

IMPORTANT — The electronic file of this document contains colours which are considered to be useful for the correct understanding of the document. Users should therefore consider printing this document using a colour printer.

1 Scope

This document specifies, with reference to ISO 230-1, the geometric tests on numerically controlled (NC) broaching machines of normal accuracy, with vertical axis acting for cutting operation. The accuracy of rotary axes, if available, is checked with reference to ISO 230-7.

This document also specifies, with reference to ISO 230-2, the positioning tests on vertical surface type broaching machines for both linear and rotary axes.

This document proposes test pieces containing broached slots and grooves with reference to ISO 230-1, cutting tests under finishing conditions. It also specifies the characteristics and dimensions of the test pieces themselves. This document is intended to supply minimum requirements for assessing the cutting accuracy of the machine.

This document also establishes the tolerances for the test results corresponding to general purpose and normal accuracy vertical surface type broaching machines equipped with numerical control.

This document explains different concepts or configurations and common features of NC vertical surface type broaching machines which are normally used in the manufacturing of turbine disks. It also provides a terminology and designation of controlled axes with reference to ISO 841.

This document deals only with the verification of the accuracy of the broaching machine. It does not apply to the operational testing of the machine (e.g. vibration, abnormal noise, stick-slip motion of components), nor to machine characteristics (e.g. speeds, feeds) as such checks are generally carried out before testing the accuracy.

2 Normative references

The following documents are referred to in the text in such a way that some or all of their content constitutes requirements of this document. For dated references, only the edition cited applies. For undated references, the latest edition of the referenced document (including any amendments) applies.

ISO 230-1:2012, *Test code for machine tools — Part 1: Geometric accuracy of machines operating under no-load or quasi-static conditions*

ISO 230-2:2014, *Test code for machine tools — Part 2: Determination of accuracy and repeatability of positioning of numerically controlled axes*

ISO 230-7:2015, *Test code for machine tools — Part 7: Geometric accuracy of axes of rotation*

© ISO 2020 – All rights reserved

Documents
Document Sharing Hub
Full document details: BS ISO 19744:2020

3 Terms and definitions

For the purposes of this document, the terms and definitions given in ISO 230-1, ISO 230-2, ISO 230-7 and the following apply.

ISO and IEC maintain terminological databases for use in standardization at the following addresses:

— ISO Online browsing platform: available at https://www.iso.org/obp

— IEC Electropedia: available at http://www.electropedia.org/

3.1
surface broaching operation
machining process in which a *broach* (3.2) is pushed over an external surface to remove material by linear cutting

Note 1 to entry: Principal cutting motion is a relative translation of broach against the non-rotating workpieces and where the cutting energy is brought by the broach or workpiece motion.

3.2
broach
cutting tool that has multiple transverse cutting edges each with progressively increased size

3.3
broaching machine
machine tool in which broaching operation is executed

3.4
vertical broaching machine
broaching machine (3.3) whose main cutting axis (Z-axis) is vertical

3.5
vertical surface type broaching machine
vertical broaching machine (3.4) in which its *broach* (3.2) is pushed or pulled over an external surface of the workpiece to remove material

4 Terminology and designation of axes

See Figure 1 and Figure 2.

A common configuration of NC vertical surface type broaching machines with A-axis is shown in Figure 2. The nomenclature for the structural components of the broaching machine are shown in Figure 1.

© ISO 2020 – All rights reserved
Documents
Document Sharing Hub
Full document details: BS ISO 19744:2020

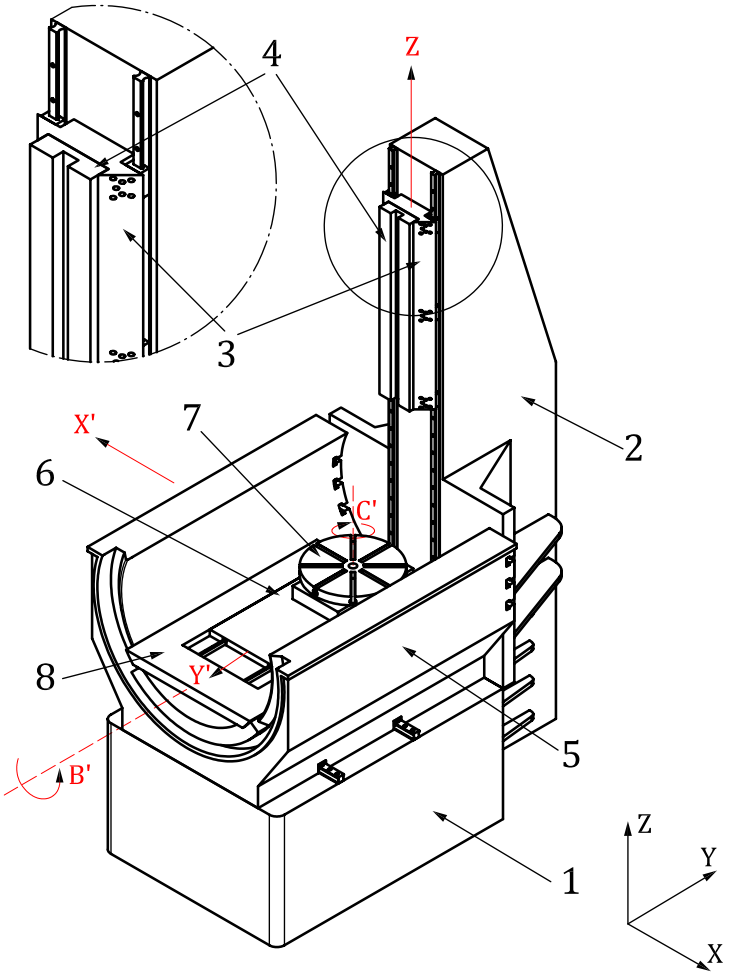

Key

	English	French
1	bed	bâti
2	column (Z-axis guideway)	colonne (guidage axe Z)
3	saddle (Z-axis)	guidage du coulisseau porte outil (axe Z)
4	broach holder	coulisseau porte-outil
5	cradle saddle (X'-axis)	guidage du berceau (axe X')
6	rotary table saddle (Y'-axis)	guidage de la table tournante (axe Y')
7	rotary table (C'-axis)	table tournante (axe C')
8	cradle (B'-axis)	berceau (axe B')

NOTE 1 Item 7, rotary table, can be called indexer.

NOTE 2 For languages other than official ISO languages, see Table A.2.

Figure 1 — Typical example of a vertical surface type broaching machine

© ISO 2020 – All rights reserved

Documents
Document Sharing Hub
Full document details: BS ISO 19744:2020

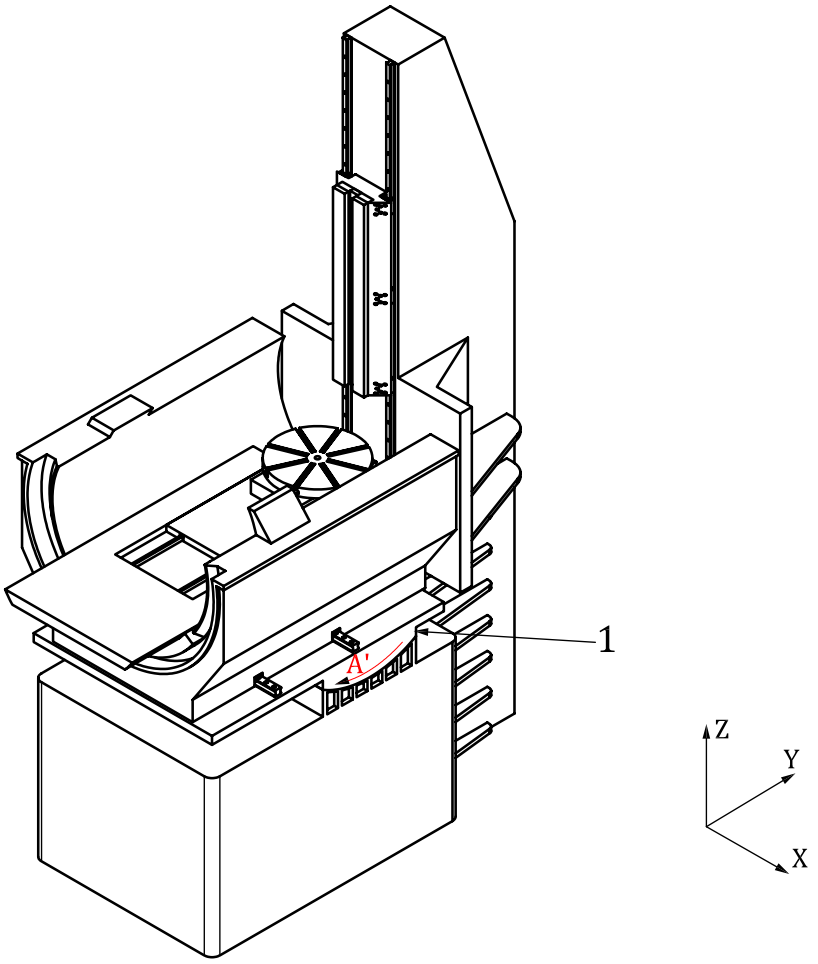

Key

	English	French
1	A'-axis	axe A'

NOTE For languages other than official ISO languages, see Table A.3.

Figure 2 — Typical example of a vertical surface type broaching machine with A-axis

5 Preliminary remarks

5.1 Measurement units

In this document, all linear dimensions, deviations, and corresponding tolerances are expressed in millimetres; angular dimensions are expressed in degrees, and angular deviations and the corresponding tolerances are expressed in ratios as the primary method, but in some cases, microradians or arcseconds may be used for clarification purposes. Formula (1) should be used for conversion of the units of angular deviations or tolerances:

$$0{,}010/1\,000 = 10\ \mu\text{rad} \approx 2'' \quad (1)$$

5.2 Reference to the ISO 230 series

To apply this document, reference shall be made to ISO 230-1, especially for the installation of the machine before testing, warming up of the moving components, description of measuring methods and recommended uncertainty of testing equipment.

© ISO 2020 – All rights reserved
Documents
Document Sharing Hub
Full document details: BS ISO 19744:2020

Where the test concerned is in compliance with the specifications of ISO 230-1:2012, ISO 230-2:2014 or ISO 230-7:2015, a reference to the corresponding subclause in ISO 230-1:2012, ISO 230-2:2014 or ISO 230-7:2015 is shown before the instructions in the "Observations" block of the tests described in Clauses 6 to 8.

5.3 Testing sequence

The sequence in which the tests are presented in this document in no way defines the practical order of testing. In order to make the mounting of instruments or gauging easier, tests may be performed in any order.

5.4 Tests to be performed

When testing a vertical broaching machine, it is neither always necessary nor possible to carry out all the tests described in this document. When the tests are required for acceptance purposes, it is up to the user to choose, in agreement with the manufacturer/supplier, those tests relating to the components and/or the properties of the machine which are of interest. These tests are to be clearly stated when ordering a machine. A simple reference to this document for the acceptance tests, without specifying the tests to be carried out, and without agreement on the relevant expenses, cannot be considered as binding for any contracting party.

5.5 Tolerances and minimum tolerance

In this document, all tolerance values (see ISO 230-1:2012, 4.1) are guidelines. When they are used for acceptance purposes other values can be agreed on between the user and the manufacturer/supplier. The required/agreed tolerance values are to be clearly stated when ordering the machine.

When establishing the tolerance for a measuring length different from that given in this document (see ISO 230-1:2012, 4.1.2), it shall be taken into consideration that the minimum value of tolerance is 0,005 mm.

5.6 Measuring instruments

Measuring instruments indicated in the tests described in Clauses 6 to 8 are examples only. Other instruments capable of measuring the same quantities and having the same, or a smaller, measurement uncertainty may be used. Reference shall be made to ISO 230-1:2012, 4.1.1, which indicates the relationship between measurement uncertainties and the tolerances.

When a “dial gauge” is referred to, it can mean not only dial test indicators (DTI) but any type of linear displacement sensor such as analogue or digital dial gauges, linear variable differential transformer (LVDTs), linear scale displacement gauges, or non-contact sensors, when applicable to the test concerned.

Similarly, when a ”straightedge” is referred to, it can mean any type of straightness reference artefact, such as a granite or ceramic or steel or cast iron straightedge, one arm of a square, one generating line on a cylindrical square, any straight path on a reference cube, or a special, dedicated artefact manufactured to fit in the T-slots, optical instruments or other references.

In the same way, when a “square” is mentioned, it can mean any type of squareness reference artefact, such as a granite or ceramic or steel or cast-iron square, a cylindrical square, a reference cube, or, again, a special, dedicated artefact.

5.7 Diagrams

For reasons of simplicity, diagrams in this document illustrate only one type of broaching machine.

© ISO 2020 – All rights reserved

Documents
Document Sharing Hub
Full document details: BS ISO 19744:2020

5.8 Software compensation

When built-in software facilities are available for compensating certain geometric deviations, their use during these tests for acceptance purposes shall be based on an agreement between the user and the manufacturer/supplier, with due consideration of the machine tool intended use. When the software compensation is used, this shall be stated in the test report. It shall be noted that when software compensation is used, axes shall not be locked for test purposes.

5.9 Axes not under test

During the execution of some geometric tests on one axis of motion, the position of the other axes, not under test, may affect the results. Therefore, the positions of these axes, as well as the offsets on the tool side and on the workpiece side, are to be stated in the test report.

All measurements shall be done while all unused axes are clamped unless software compensation is applied.

© ISO 2020 – All rights reserved
Documents
Document Sharing Hub
Full document details: BS ISO 19744:2020

6 Geometric tests

6.1 Straightness errors of linear motions

Object	**G1**
Checking of straightness error of the X-axis motion in the XY plane (E_{YX}).	
Diagram	

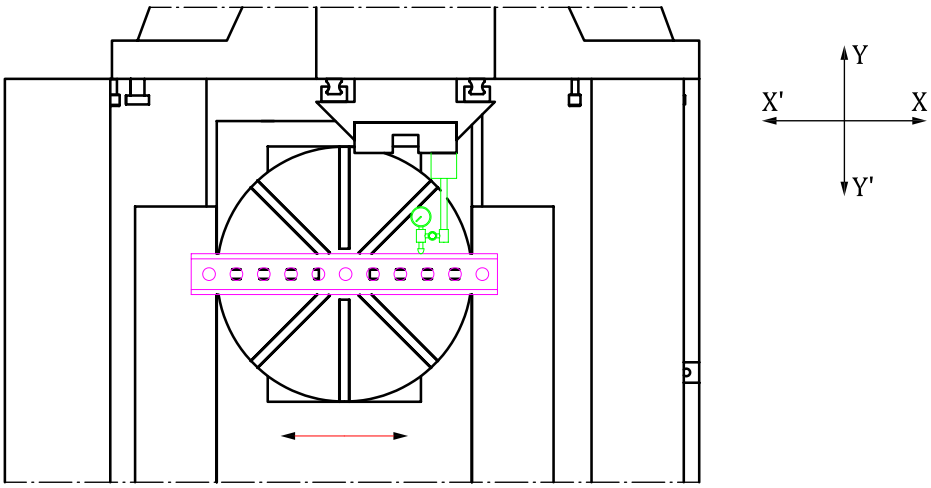

Tolerance

0,030 for a measuring length of 300

Measured error

Measuring instruments

Straightedge and dial gauge; or

Optical methods.

Observations and references to ISO 230-1:2012, 8.2 and 8.2.2

For this test, the straightedge or the straightness reflector shall be placed on the table.

Methods based on measurements of angles (ISO 230-1:2012, 12.1.3) shall not be applied as these methods are restricted to measurements of functional surfaces.

Measurements shall be carried out on at least six positions along the travel, in both directions of motion, with equally spaced steps.

© ISO 2020 – All rights reserved

Documents
Document Sharing Hub
Full document details: BS ISO 19744:2020

6.2 Squareness/Parallelism errors between linear/rotary motions

Object	**G2**
Checking of squareness error of the X-axis motion to the Z-axis motion $E_{B(0Z)X}$.	

Diagram

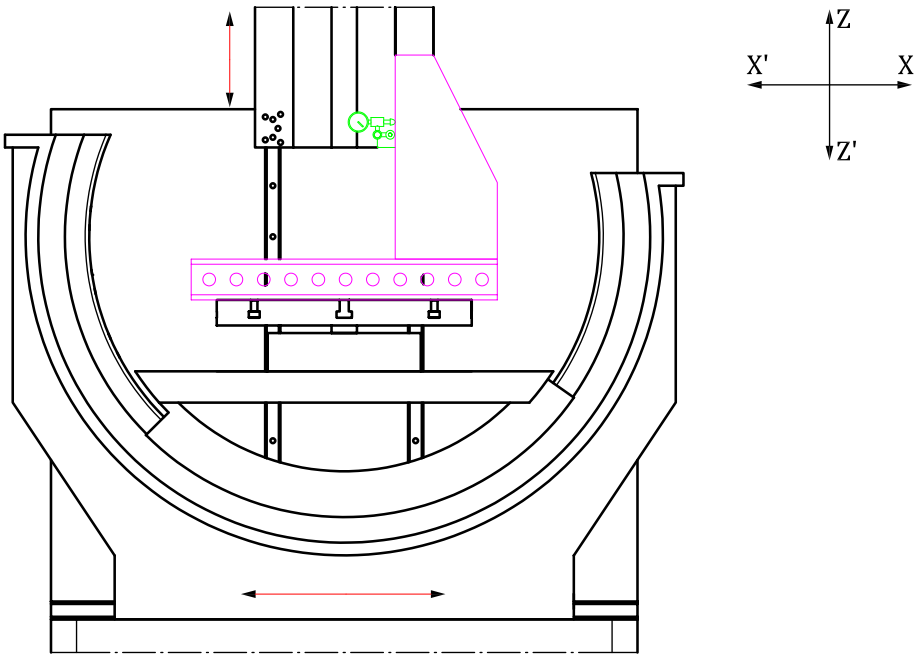

NOTE This test can be executed while the rotary table is not mounted on the rotary table saddle.

Tolerance

0,130/1 000 (0,040/300) or 26″

Measured error

Measuring instruments

Straightedge or surface plate, square and dial gauge.

Observations and references to ISO 230-1:2012, 10.3 and 10.3.2

Set the straightedge or the surface plate along the X-axis movement. Place a square on the straightedge.

Try to make measuring side of the square parallel to Z-axis by having the same readings of the dial gauge touching the square at two ends of the stroke of Z-axis or the lack of parallelism shall be considered in the measurement. After this adjustment, apply the dial gauge to the straightedge, while orientation of its stylus is in the Z-direction and the dial gauge is moved along X-axis and record the readings of the dial gauge.

The measured squareness error is the ratio between the reading and the travelled distance along the X-axis.

NOTE The direction of Z-axis motion is stated in the test result.

© ISO 2020 – All rights reserved
Documents
Document Sharing Hub
Full document details: BS ISO 19744:2020

Object	**G3**
Checking of squareness error of the Y-axis motion to the Z-axis motion $E_{A(0Z)Y}$.	

Diagram

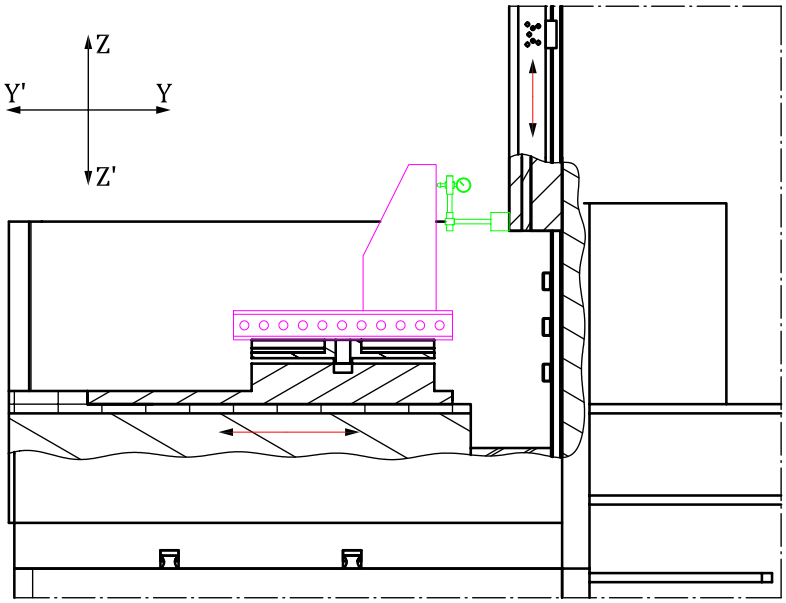

NOTE This test can be executed while the rotary table is not mounted on the rotary table saddle.

Tolerance

0,130/1 000 (0,040/300) or 26″

Measured error

Measuring instruments

Straightedge or surface plate, square and dial gauge.

Observations and references to ISO 230-1:2012, 10.3 and 10.3.2

Set the straightedge or the surface plate along the Y-axis movement. Place a square on the straightedge.

Try to make measuring side of the square parallel to Z-axis by having the same readings of the dial gauge touching the square at two ends of the stroke of Z-axis or the lack of parallelism shall be considered in the measurement. After this adjustment, apply the dial gauge to the straightedge, while orientation of its stylus is in the Z-direction and the dial gauge is moved along Y-axis and record the readings of the dial gauge.

The measured squareness error is the ratio between the reading and the travelled distance along the Y-axis.

NOTE The direction of Z-axis motion is stated in the test result.

© ISO 2020 – All rights reserved

Documents
Document Sharing Hub
Full document details: BS ISO 19744:2020