BS ISO 20064:2019

BSI Standards Publication

Metallic materials — Steel — Method of test for the determination of brittle crack arrest toughness, K_{ca}

Documents
Document Sharing Hub

Full document details: BS ISO 20064:2019

National foreword

This British Standard is the UK implementation of ISO 20064:2019.

The UK participation in its preparation was entrusted to Technical Committee ISE/101/4, Toughness testing.

A list of organizations represented on this committee can be obtained on request to its secretary.

This publication does not purport to include all the necessary provisions of a contract. Users are responsible for its correct application.

© The British Standards Institution 2019
Published by BSI Standards Limited 2019

ISBN 978 0 580 90508 7

ICS 77.040.10

Compliance with a British Standard cannot confer immunity from legal obligations.

This British Standard was published under the authority of the Standards Policy and Strategy Committee on 31 July 2019.

Amendments/corrigenda issued since publication

Date	Text affected

Documents
Document Sharing Hub

Full document details: BS ISO 20064:2019

INTERNATIONAL STANDARD

ISO 20064

First edition
2019-07

Metallic materials — Steel — Method of test for the determination of brittle crack arrest toughness, K_{ca}

Matériaux métalliques — Acier — Méthode d'essai pour déterminer la ténacité à la rupture fragile, K_{ca}

Reference number
ISO 20064:2019(E)

Documents
Document Sharing Hub

© ISO 2019

Full document details: BS ISO 20064:2019

COPYRIGHT PROTECTED DOCUMENT

© ISO 2019

All rights reserved. Unless otherwise specified, or required in the context of its implementation, no part of this publication may be reproduced or utilized otherwise in any form or by any means, electronic or mechanical, including photocopying, or posting on the internet or an intranet, without prior written permission. Permission can be requested from either ISO at the address below or ISO's member body in the country of the requester.

ISO copyright office
CP 401 • Ch. de Blandonnet 8
CH-1214 Vernier, Geneva
Phone: +41 22 749 01 11
Fax: +41 22 749 09 47
Email: copyright@iso.org
Website: www.iso.org

Published in Switzerland

© ISO 2019 – All rights reserved

Documents
Document Sharing Hub

Full document details: BS ISO 20064:2019

Contents

Page

Foreword ... **v**
Introduction ... **vi**
1 Scope ... **1**
2 Normative references ... **1**
3 Terms and definitions ... **1**
4 Symbols ... **2**
5 Test equipment ... **3**
5.1 General ... 3
5.2 Testing machine ... 3
5.2.1 Force implementation ... 3
5.2.2 Calibration of the load cell ... 3
5.2.3 Force measurement ... 4
5.2.4 Method for force transfer to integrated test piece ... 4
5.2.5 Loading direction ... 4
5.2.6 Distance between the loading pins ... 4
5.3 Impact equipment ... 4
5.3.1 Impact methods ... 4
5.3.2 Impact energy calculation ... 6
5.3.3 Reaction force receivers ... 6
6 Test pieces ... **7**
6.1 Test piece configurations ... 7
6.2 Configurations of extension plates and tab plates ... 9
6.2.1 General ... 9
6.2.2 Extension plates ... 11
6.2.3 Tab plates ... 11
6.3 Welding of test piece and extension plates ... 11
7 Test methods ... **12**
7.1 Temperature control method ... 12
7.1.1 Determination of temperature gradient ... 12
7.1.2 Method of temperature control and monitoring ... 13
7.2 Crack initiation methods ... 14
8 Test procedures ... **15**
8.1 Pretest procedures ... 15
8.2 Impacting procedures ... 16
8.3 Post-test operations ... 16
8.4 Observation of fracture surfaces ... 17
9 Determination of arrest toughness ... **22**
9.1 Validation of arrested crack ... 22
9.2 Assessment of impact energy ... 23
9.3 Calculation of arrest toughness ... 24
10 Reporting ... **24**
Annex A (informative) **Devices and method for controlling and monitoring the temperature of test pieces** ... **28**
Annex B (normative) **Method for obtaining K_{ca} at a specific temperature** ... **31**
Annex C (normative) **Calculation of stress intensity factors for a curved crack** ... **33**
Annex D (informative) **Double tension type arrest test** ... **34**
Annex E (informative) **Duplex type arrest test** ... **37**

Documents
Document Sharing Hub

© ISO 2019 – All rights reserved

Full document details: BS ISO 20064:2019

Annex F (informative) **Dynamic measurement methods** **40**
Bibliography **44**

© ISO 2019 – All rights reserved
Documents
Document Sharing Hub
Full document details: BS ISO 20064:2019

Foreword

ISO (the International Organization for Standardization) is a worldwide federation of national standards bodies (ISO member bodies). The work of preparing International Standards is normally carried out through ISO technical committees. Each member body interested in a subject for which a technical committee has been established has the right to be represented on that committee. International organizations, governmental and non-governmental, in liaison with ISO, also take part in the work. ISO collaborates closely with the International Electrotechnical Commission (IEC) on all matters of electrotechnical standardization.

The procedures used to develop this document and those intended for its further maintenance are described in the ISO/IEC Directives, Part 1. In particular, the different approval criteria needed for the different types of ISO documents should be noted. This document was drafted in accordance with the editorial rules of the ISO/IEC Directives, Part 2 (see www.iso.org/directives).

Attention is drawn to the possibility that some of the elements of this document may be the subject of patent rights. ISO shall not be held responsible for identifying any or all such patent rights. Details of any patent rights identified during the development of the document will be in the Introduction and/or on the ISO list of patent declarations received (see www.iso.org/patents).

Any trade name used in this document is information given for the convenience of users and does not constitute an endorsement.

For an explanation of the voluntary nature of standards, the meaning of ISO specific terms and expressions related to conformity assessment, as well as information about ISO's adherence to the World Trade Organization (WTO) principles in the Technical Barriers to Trade (TBT) see www.iso.org/iso/foreword.html.

This document was prepared by Technical Committee ISO/TC 164, *Mechanical testing of metals*, Subcommittee SC 4, *Fatigue, fracture and toughness testing*.

Any feedback or questions on this document should be directed to the user's national standards body. A complete listing of these bodies can be found at www.iso.org/members.html.

© ISO 2019 – All rights reserved

Documents
Document Sharing Hub
Full document details: BS ISO 20064:2019

Introduction

This document provides a test method for determining the crack arrest toughness of steels. Experimental methods of crack propagation and arrest are documented in Reference [1] Among these, ASTM E1221[2] is a test method to evaluate lower bound crack arrest toughness, K_{Ia}, under plane strain conditions. On the other hand, crack arrest testing methods using wide plates were developed in the 1950s[3] and have been used for assessing the crack arrest capabilities of cryogenic tanks[3] and pressure vessels[4][5][6]. In recent years, these methods have been extensively used for evaluating the crack arrest toughness of ship steels[7].

The wide plate crack arrest test is intended to evaluate the arrest toughness, K_{ca}, of steel plate at its thickness of actual use and not the lower bound arrest toughness, K_{Ia}. However, the relationship between the two arrest toughness values has been investigated[4][6]. It was shown that K_{Ia} and K_{ca} values agreed at lower bound of K_{ca}. Moreover, the wide plate crack arrest tests were shown to evaluate the arrest toughness at a higher temperature range at which K_{Ia} evaluation is impossible. The theoretical background of crack arrest toughness testing with a temperature gradient is described in References [8] and [9].

This document provides a test method for the determination of brittle crack arrest toughness of steel by using wide plates with a temperature gradient.

The test method can be summarized as follows: after setting a temperature gradient across the width of a test piece and applying uniform stress to the test piece, the test piece is struck to initiate a brittle crack from a mechanical notch in either edge of the test piece and cause crack arrest after propagating in the width direction (temperature gradient type arrest testing). Annex A describes typical devices and a method of setting the temperature gradient on the piece. Using the stress intensity factor, the arrest toughness, K_{ca}, is calculated from the applied stress and the arrest crack length. This value is the arrest toughness at the temperature at the point of crack arrest (arrest temperature). To determine K_{ca} at a specific temperature, such as the design temperature of a structure, the method specified in Annex B is applicable.

The method described in Annex C can be used to determine the stress intensity factor for a curved crack, in order to check the validity of a crack propagation path.

As a method for initiating a brittle crack, a secondary loading mechanism can be used (see Annex D). The arrest characteristics of the test piece can also be evaluated by welding a crack starter plate to the test plate in the width direction to enable a brittle crack initiated from the mechanical notch at the edge of the test piece to propagate in the crack running plate and observing the propagation behaviour of the crack immediately after entering the test plate (see Annex E).

The method explained in Annex F can be used to determine the dynamic behaviour of crack propagation and measure the dynamic strain of a test piece.

© ISO 2019 – All rights reserved
Documents
Document Sharing Hub
Full document details: BS ISO 20064:2019

Metallic materials — Steel — Method of test for the determination of brittle crack arrest toughness, K_{ca}

1 Scope

This document specifies a test method for the determination of brittle crack arrest toughness.

It is applicable to ferritic steel base metals exhibiting ductile to brittle transition behaviour. Applicable materials are rolled steel plates. It is intended for materials with a tensile strength of 950 MPa or less and a test piece thickness of 200 mm or less. The range of arrest temperatures is between –196 °C and +100 °C. This document can be applied to flat rolled steel plates but not to flattened steel pipes because the flattening can cause changes in arrest toughness.

2 Normative references

The following documents are referred to in the text in such a way that some or all of their content constitutes requirements of this document. For dated references, only the edition cited applies. For undated references, the latest edition of the referenced document (including any amendments) applies.

ISO 7500-1, *Metallic materials — Calibration and verification of static uniaxial testing machines — Part 1: Tension/compression testing machines — Calibration and verification of the force-measuring system*

3 Terms and definitions

For the purposes of this document, the following terms and definitions apply.

ISO and IEC maintain terminological databases for use in standardization at the following addresses:

— ISO Online browsing platform: available at https://www.iso.org/obp

— IEC Electropedia: available at http://www.electropedia.org/

3.1
brittle fracture
fracture with predominantly cleavage

3.2
arrest
sudden halt of a propagating *brittle crack* (3.4)

3.3
arrest toughness
materials resistance against *brittle crack* (3.4) propagation expressed in terms of stress intensity factor

3.4
brittle crack
crack propagating at approximately 300 m/s or more due to a *brittle fracture* (3.1)

3.5
arrest temperature
temperature at the point where a *brittle crack* (3.4) is arrested in the temperature gradient type *arrest toughness* (3.3) test

© ISO 2019 – All rights reserved

Documents
Document Sharing Hub
Full document details: BS ISO 20064:2019

3.6
test piece
flat steel plate in which *arrest toughness* (3.3) is to be evaluated

3.7
tab plate
thick end inserted for transferring force from a testing machine

3.8
extension plate
flat plate welded between the *test piece* (3.6) and *tab plates* (3.7)

3.9
integrated test piece
weld assembly of *test piece* (3.6), *extension plates* (3.8) and *tab plates* (3.7)

3.10
loading pin
pin used for the transfer of the force from the testing machine into the *integrated test piece* (3.9)

3.11
distance between loading pins
distance between the centres of the *loading pins* (3.10) inserted into the holes of the *tab plates* (3.7)

3.12
impact energy
energy applied to a wedge placed on a notch formed at the edge of a *test piece* (3.6) to initiate a *brittle crack* (3.4)

3.13
crack branching
case when two or more cracks form during initiation or propagation of a *brittle crack* (3.4)

Note 1 to entry: Secondary cracks that are not a main crack are called branch cracks.

3.14
main crack
crack with the longest propagation length when *crack branching* (3.13) occurs

3.15
shear lip
fracture surface generated by ductile fracture adjacent to the front and back surfaces of a steel plate

3.16
stretch zone
plastic deformation at tip of the arrested crack front

4 Symbols

For the purposes of this document, the symbols given in Table 1 apply.

Table 1 — Symbols used in this document

Symbol	Unit	Designation
a_{ca}	mm	Arrest crack length
B	mm	Test piece thickness
B_{ex}	mm	Extension plate thickness
[a] 0,031 6 MPa m$^{1/2}$ = 1 N mm$^{-3/2}$ =0,031 6 MN m$^{-3/2}$.		

© ISO 2019 – All rights reserved
Documents
Document Sharing Hub
Full document details: BS ISO 20064:2019

Table 1 *(continued)*

Symbol	Unit	Designation
B_{tb}	mm	Tab plate thickness
E	MPa	Modulus of elasticity
E_i	J	Impact energy
E_s	J	Strain energy stored in a test piece
E_t	J	Total strain energy stored in extension plates and tab plates
F	MN	Applied force
K	MPa $m^{1/2}$ ($N/mm^{3/2}$)[a]	Stress intensity factor
K_{ca}	MPa $m^{1/2}$ ($N/mm^{3/2}$)[a]	Arrest toughness
L	mm	Test piece length
L_p	mm	Distance between loading pins
L_{ex}	mm	Extension plate length
L_{tb}	mm	Tab plate length
R_p	MPa	Yield stress at room temperature
T_{ca}	°C	Arrest temperature
T_{caK}	K	
W	mm	Test piece width
W_{ex}	mm	Extension plate width
W_{tb}	mm	Tab plate width
x_a	mm	Coordinate of the main crack tip in the width direction
x_{br}	mm	Coordinate of the longest branch crack tip in the width direction
y_a	mm	Coordinate of the main crack tip in the loading direction
y_{br}	mm	Coordinate of the longest branch crack tip in the loading direction
σ	MPa	Applied stress in unnotched cross section

[a] 0,031 6 MPa $m^{1/2}$ = 1 N $mm^{-3/2}$ =0,031 6 MN $m^{-3/2}$.

5 Test equipment

5.1 General

The following provides specifications for the testing machine needed for conducting the test. The testing machine is used to apply tensile force to an integrated test piece, and the impact equipment is used to initiate a brittle crack on the test piece.

5.2 Testing machine

5.2.1 Force implementation

Tensile force to an integrated test piece can be either hydraulically or mechanically applied using either force or displacement control.

5.2.2 Calibration of the load cell

Load cells shall be calibrated to check the accuracy of force measurement. The force-measuring system of the testing machine shall be calibrated in accordance with ISO 7500-1, class 1, or better.

© ISO 2019 – All rights reserved

Documents
Document Sharing Hub
Full document details: BS ISO 20064:2019

The accuracy of the load cells shall be 1 % of the full scale or less.

5.2.3 Force measurement

Force is measured using a calibrated load cell attached to the testing machine.

5.2.4 Method for force transfer to integrated test piece

The force applied to an integrated test piece by the test machine shall be via a clevis pin type loading method as shown in Figure 1. Centres of the loading pins at both ends shall align with the neutral axis of the integrated test piece.

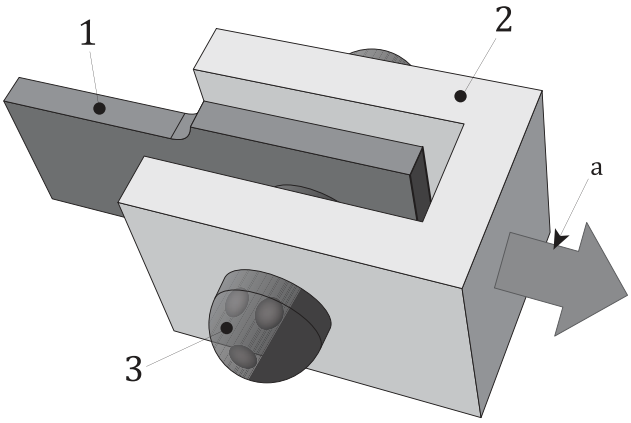

Key

1 integrated test piece

2 load clevis

3 pin

a Force.

Figure 1 — Method for loading an integrated test piece through loading pins

5.2.5 Loading direction

The test machine may be either horizontal or vertical. In the case of the horizontal direction, the test piece surfaces shall be placed either perpendicular or parallel to the ground. However, when using the parallel position, care should be taken to ensure that the temperature difference between the top and bottom surfaces of the test piece is within the values specified in 7.1.1.2.

5.2.6 Distance between the loading pins

The distance between the loading pins, L_p, as defined in Figure 8, shall be 3,4W or more for preventing force drop by a reflection of stress wave at the loading pins. Since the distance between the loading pins potentially has an effect on the force drop associated with crack propagation, especially for a long arrested crack, the validity of the test results shall be verified using the method described in 9.1[11].

5.3 Impact equipment

5.3.1 Impact methods

Recommended methods for applying an impact force to a wedge mounted on the notch of an integrated test piece include the drop-weight type and the air gun type, as shown in Figure 2 a) and Figure 2 b), respectively. The drop weight type method applies an impact force to the wedge by freely dropping a weight from a predetermined height. The air gun type method applies an impact force to the wedge by

© ISO 2019 – All rights reserved
Documents
Document Sharing Hub
Full document details: BS ISO 20064:2019

introducing a predetermined gas pressure into a piston-sealed cylinder, and then releasing the lock of the piston.

The wedge shall be of sufficient hardness not to plastically deform during impact. The wedge thickness shall be equal to or greater than that of the test piece, and the wedge angle shall be greater than that of the notch formed in the test piece and shall have a shape capable of opening up the notch of the test piece. The recommended shape of the wedge is shown in Figure 3.

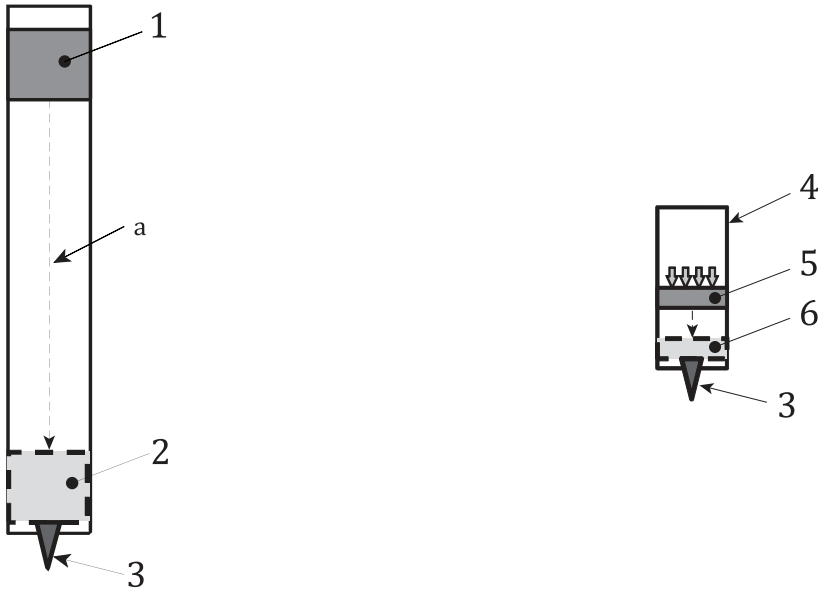

a) Drop weight type **b) Air gun type**

Key

1 drop weight (before impact)
2 drop weight (after impact)
3 wedge
4 cylinder
5 piston (before impact)
6 piston (after impact)
[a] Free fall of drop weight.

Figure 2 — Impact apparatus

© ISO 2019 – All rights reserved

Documents
Document Sharing Hub
Full document details: BS ISO 20064:2019

Dimensions in millimetres

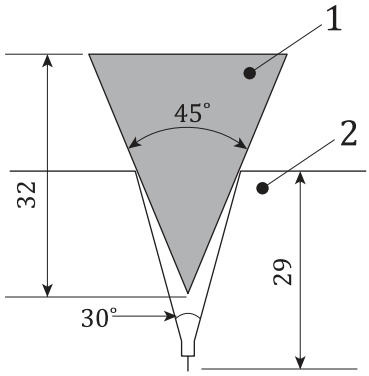

Key

1 wedge

2 test piece

Figure 3 — Recommended wedge shape

5.3.2 Impact energy calculation

Formula (1) shall be used to calculate the impact energy for the drop weight type method.

$$E_{\mathrm{i}} = mgh \tag{1}$$

where

m is the mass of the drop weight (kg);

g is the acceleration of gravity (9,81 m/s^2);

h is the height from the wedge to the drop weight (m).

For the air gun type method, an energy conversion table specific to the impact apparatus used for testing shall be used to calculate the impact energy. Impact energy shall be controlled by changing the cylinder pressure.

NOTE The energy conversion table is generally provided by the manufacturer of the air gun type impact apparatus.

Setting of the impact energy value before the test and its validity check after the test are described in 7.2 and 9.2, respectively.

5.3.3 Reaction force receivers

To suppress the bending moment caused by impact, a reaction force receiver shall be applied opposite the impact edge of the integrated test piece. Two types of recommended reaction force receivers are shown in Figure 4. The floor type, shown in Figure 4 a), is fixed on the ground. The hold type, shown in Figure 4 b), connects to the frame of the impact apparatus[12][13][14]. Other methods which are equivalent to the methods shown in Figure 4 a) and Figure 4 b) may be applied.

© ISO 2019 – All rights reserved
Documents
Document Sharing Hub
Full document details: BS ISO 20064:2019

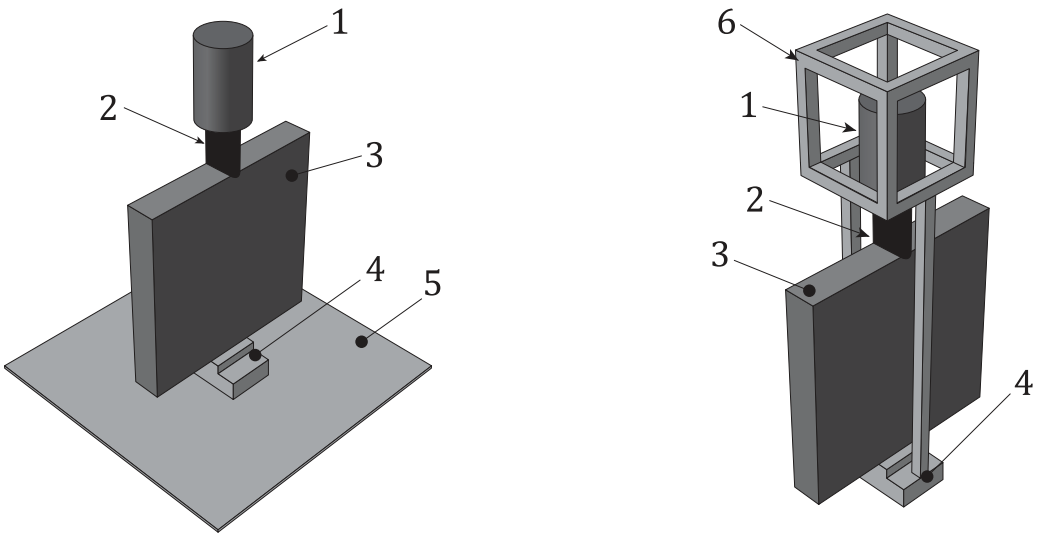

a) Floor type **b) Hold type**

Key

1 impact apparatus
2 wedge
3 test piece
4 reaction force receiver
5 ground
6 frame

Figure 4 — Fixing methods of reaction force receivers

6 Test pieces

6.1 Test piece configurations

The standard test piece configuration is shown in Figure 5. Table 2 shows the ranges of test piece thicknesses, widths and width-to-thickness ratios[11][12][15].

The test piece length shall be equal to or greater than 500 mm or *W*, whichever is greater.

A crack starter notch shall be introduced at a test piece edge. The notch may be a mechanical or pressed notch. The pressed notch can be formed by placing a jig having a sharp edge on the bottom of the mechanical notch and applying hydraulic pressure to the jig. The length of the notch shall be 29 mm. No other requirements are specified for the notch shape, but the notch edge shape shall be designed so that a brittle crack is initiated by impact within the impact energy value specified in 9.2 but does not initiate during force increase before attaining a specified force value. Figure 6 shows the recommended notch configurations. Side-grooves at the notch-root may be machined on both faces of the test piece to minimize crack deviation and branching. However, the side-groove depth shall be equal to or less than 0,1*B* and the side-groove length measured from the notch-root shall be equal to or less than *B* or 0,1*W*, whichever is smaller. A notch of the same length shall be introduced at the opposite edge to avoid bending moment by matching the net-section centre with the loading axis. In case the side-grooves are applied, however, the notch length at the opposite edge shall be determined so that there is no bending moment.

© ISO 2019 – All rights reserved

Documents
Document Sharing Hub
Full document details: BS ISO 20064:2019

Table 2 — Dimensions of test pieces

Thickness	Width	Width to thickness ratio
6 mm ≤ B ≤ 200 mm	350 mm ≤ W ≤ 1 000 mm (standard width: W = 500 mm)	$W/B \geq 5$

Dimensions in millimetres

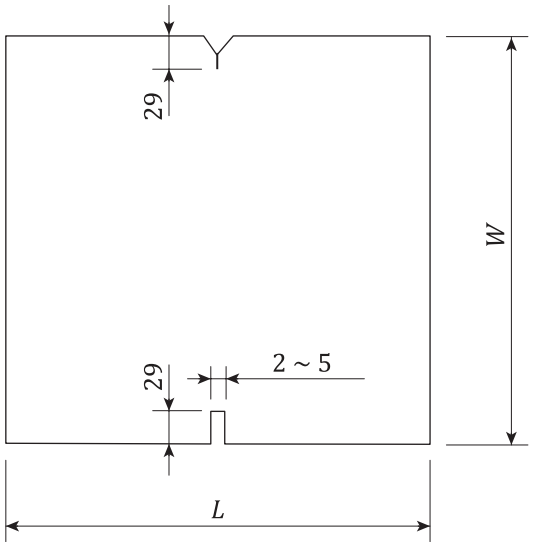

Key

W 500

L 500

Figure 5 — Standard test piece configuration

Dimensions in millimetres

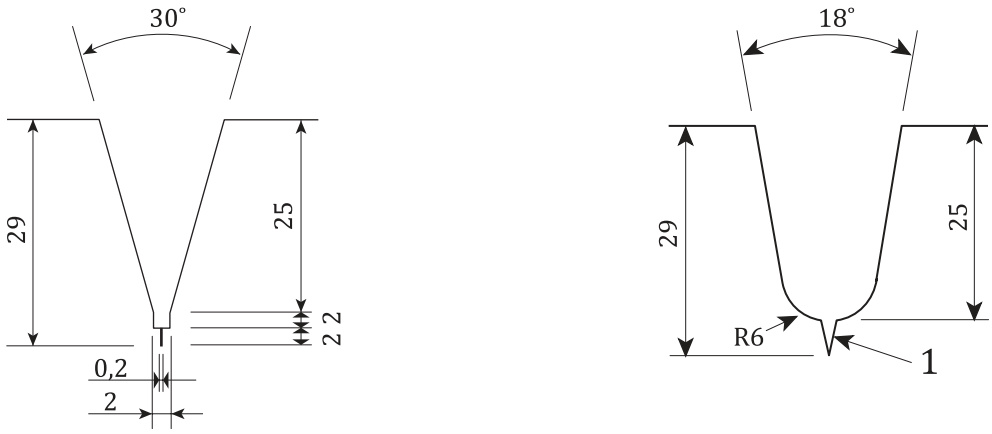

a) Mechanical notch **b) Pressed notch**

Key

1 pressed notch

Figure 6 — Recommended notch configurations of test pieces

© ISO 2019 – All rights reserved
Documents
Document Sharing Hub
Full document details: BS ISO 20064:2019

6.2 Configurations of extension plates and tab plates

6.2.1 General

The definitions of the dimensions of the extension plates and tab plates are shown in Figure 7. Typical examples are shown in Figure 8.

As for loading pins, either the single-pin type or the double-pin type shall be used.

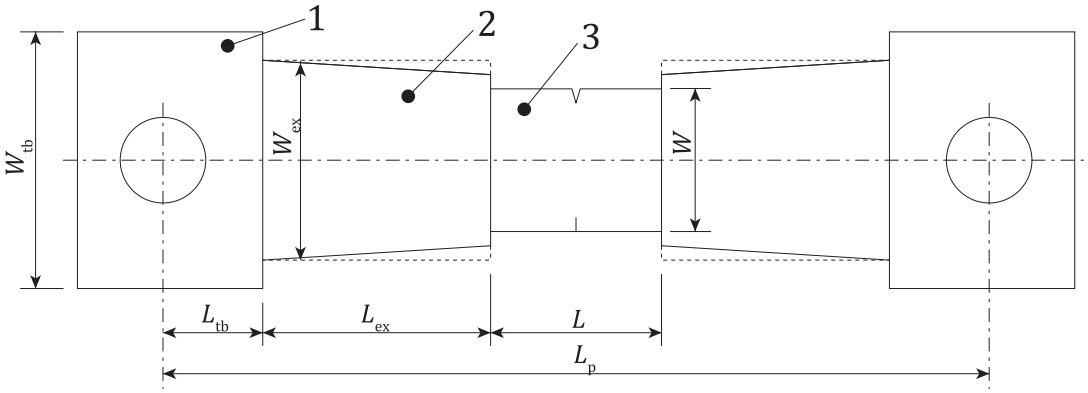

a) Single-pin type

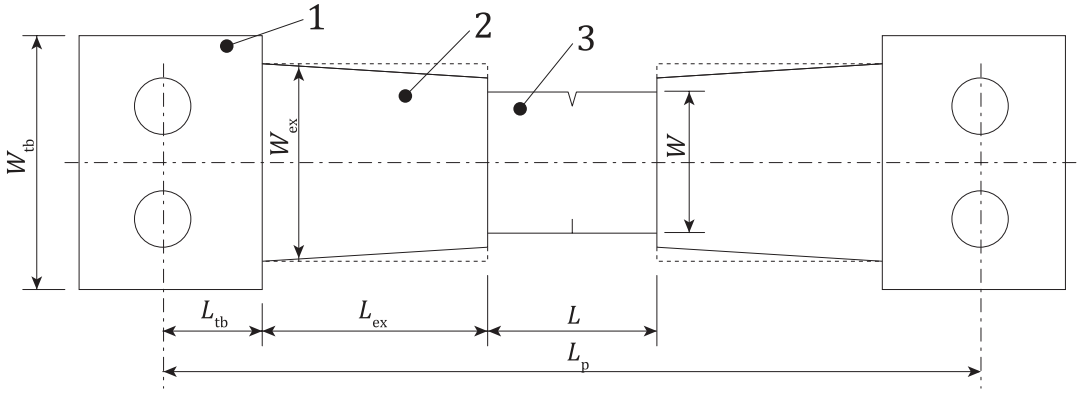

b) Double-pin type

Key

1 tab plate (thickness: B_{tb})

2 extension plate (thickness: B_{ex})

3 test piece (thickness: B)

Figure 7 — Definitions of dimensions of extension plates and tab plates

© ISO 2019 – All rights reserved

Documents
Document Sharing Hub
Full document details: BS ISO 20064:2019