BS ISO 20104:2015

BSI Standards Publication

# Space data and information transfer systems — Producer-Archive Interface Specification (PAIS)

bsi.

...making excellence a habit.™

Document Sharing Hub

## National foreword

This British Standard is the UK implementation of ISO 20104:2015.

The UK participation in its preparation was entrusted to Technical Committee ACE/68, Space systems and operations.

A list of organizations represented on this committee can be obtained on request to its secretary.

This publication does not purport to include all the necessary provisions of a contract. Users are responsible for its correct application.

© The British Standards Institution 2015.
Published by BSI Standards Limited 2015

ISBN 978 0 580 87572 4

ICS 49.140

**Compliance with a British Standard cannot confer immunity from legal obligations.**

This British Standard was published under the authority of the Standards Policy and Strategy Committee on 31 December 2015.

**Amendments/corrigenda issued since publication**

| Date | Text affected |
|---|---|

Documents
Document Sharing Hub

Full document details: BS ISO 20104:2015

# INTERNATIONAL STANDARD

# ISO 20104

First edition
2015-08-15

# Space data and information transfer systems — Producer-Archive Interface Specification (PAIS)

*Systèmes de transfert des informations et données spatiales — Spécification de l'interface entre producteur et archives (PAIS)*

Reference number
ISO 20104:2015(E)

Documents
Document Sharing Hub

© ISO 2015

Full document details: BS ISO 20104:2015

**COPYRIGHT PROTECTED DOCUMENT**

© ISO 2015, Published in Switzerland

All rights reserved. Unless otherwise specified, no part of this publication may be reproduced or utilized otherwise in any form or by any means, electronic or mechanical, including photocopying, or posting on the internet or an intranet, without prior written permission. Permission can be requested from either ISO at the address below or ISO's member body in the country of the requester.

ISO copyright office
Ch. de Blandonnet 8 • CP 401
CH-1214 Vernier, Geneva, Switzerland
Tel. +41 22 749 01 11
Fax +41 22 749 09 47
copyright@iso.org
www.iso.org


© ISO 2015 – All rights reserved

Documents
Document Sharing Hub

Full document details: BS ISO 20104:2015

# Foreword

ISO (the International Organization for Standardization) is a worldwide federation of national standards bodies (ISO member bodies). The work of preparing International Standards is normally carried out through ISO technical committees. Each member body interested in a subject for which a technical committee has been established has the right to be represented on that committee. International organizations, governmental and non-governmental, in liaison with ISO, also take part in the work. ISO collaborates closely with the International Electrotechnical Commission (IEC) on all matters of electrotechnical standardization.

International Standards are drafted in accordance with the rules given in the ISO/IEC Directives, Part 2.

The main task of technical committees is to prepare International Standards. Draft International Standards adopted by the technical committees are circulated to the member bodies for voting. Publication as an International Standard requires approval by at least 75 % of the member bodies casting a vote.

Attention is drawn to the possibility that some of the elements of this document may be the subject of patent rights. ISO shall not be held responsible for identifying any or all such patent rights.

ISO 20104 was prepared by the Consultative Committee for Space Data Systems (CCSDS) (as CCSDS 651.1-B-1, February 2014) and was adopted (without modifications except those stated in clause 2 of this International Standard) by Technical Committee ISO/TC 20, *Aircraft and space vehicles*, Subcommittee SC 13, *Space data and information transfer systems*.

Documents
Document Sharing Hub

© ISO 2015 – All rights reserved


Full document details: BS ISO 20104:2015

Documents
Document Sharing Hub

The Consultative Committee for Space Data Systems

Recommendation for Space Data System Standards

# PRODUCER-ARCHIVE INTERFACE SPECIFICATION (PAIS)

## RECOMMENDED STANDARD

## CCSDS 651.1-B-1

## BLUE BOOK

February 2014

Documents
Document Sharing Hub

Full document details: BS ISO 20104:2015

# AUTHORITY

| | |
|---|---|
| Issue: | Recommended Standard, Issue 1 |
| Date: | February 2014 |
| Location: | Washington, DC, USA |

This document has been approved for publication by the Management Council of the Consultative Committee for Space Data Systems (CCSDS) and represents the consensus technical agreement of the participating CCSDS Member Agencies. The procedure for review and authorization of CCSDS documents is detailed in *Organization and Processes for the Consultative Committee for Space Data Systems* (CCSDS A02.1-Y-3), and the record of Agency participation in the authorization of this document can be obtained from the CCSDS Secretariat at the address below.

This document is published and maintained by:

CCSDS Secretariat
Space Communications and Navigation Office, 7L70
Space Operations Mission Directorate
NASA Headquarters
Washington, DC 20546-0001, USA


© ISO 2015 – All rights reserved
AVA Documents
Document Sharing Hub
Full document details: BS ISO 20104:2015

# STATEMENT OF INTENT

The Consultative Committee for Space Data Systems (CCSDS) is an organization officially established by the management of its members. The Committee meets periodically to address data systems problems that are common to all participants, and to formulate sound technical solutions to these problems. Inasmuch as participation in the CCSDS is completely voluntary, the results of Committee actions are termed **Recommended Standards** and are not considered binding on any Agency.

This **Recommended Standard** is issued by, and represents the consensus of, the CCSDS members. Endorsement of this **Recommendation** is entirely voluntary. Endorsement, however, indicates the following understandings:

- o Whenever a member establishes a CCSDS-related **standard**, this **standard** will be in accord with the relevant **Recommended Standard**. Establishing such a **standard** does not preclude other provisions which a member may develop.
- o Whenever a member establishes a CCSDS-related **standard**, that member will provide other CCSDS members with the following information:
  - -- The **standard** itself.
  - -- The anticipated date of initial operational capability.
  - -- The anticipated duration of operational service.
- o Specific service arrangements shall be made via memoranda of agreement. Neither this **Recommended Standard** nor any ensuing **standard** is a substitute for a memorandum of agreement.

No later than three years from its date of issuance, this **Recommended Standard** will be reviewed by the CCSDS to determine whether it should: (1) remain in effect without change; (2) be changed to reflect the impact of new technologies, new requirements, or new directions; or (3) be retired or canceled.

In those instances when a new version of a **Recommended Standard** is issued, existing CCSDS-related member standards and implementations are not negated or deemed to be non-CCSDS compatible. It is the responsibility of each member to determine when such standards or implementations are to be modified. Each member is, however, strongly encouraged to direct planning for its new standards and implementations towards the later version of the Recommended Standard.


© ISO 2015 – All rights reserved
AVA Documents Document Sharing Hub
Full document details: BS ISO 20104:2015

# FOREWORD

This Recommended Standard is a technical Recommendation providing the abstract syntax and an XML implementation of descriptions of data to be sent to an archive. These descriptions are negotiated agreements between the data Producer and the Archive that facilitate production of agreed data by the Producer and validation of received data by the Archive. This Recommended Standard includes an abstract syntax for describing how these data will be aggregated into packages for transmission and one concrete implementation for the packages based on the XML Formatted Data Unit (XFDU) standard (see reference [1]). This will fulfill parts of the process defined in the *Producer Archive Ingest Methodology Abstract Standard (PAIMAS)* (see reference [2]).

Attention is drawn to the possibility that some of the elements of this document may be the subject of patent rights. CCSDS shall not be held responsible for identifying any or all such patent rights.

Through the process of normal evolution, it is expected that expansion, deletion, or modification of this document may occur. This Recommended Standard is therefore subject to CCSDS document management and change control procedures, which are defined in *Organization and Processes for the Consultative Committee for Space Data Systems* (CCSDS A02.1-Y-3). Current versions of CCSDS documents are maintained at the CCSDS Web site:

http://www.ccsds.org/

Questions relating to the contents or status of this document should be addressed to the CCSDS Secretariat at the address indicated on page i.


© ISO 2015 – All rights reserved
AVA Documents Document Sharing Hub
Full document details: BS ISO 20104:2015

At time of publication, the active Member and Observer Agencies of the CCSDS were:

Member Agencies

- Agenzia Spaziale Italiana (ASI)/Italy.
- Canadian Space Agency (CSA)/Canada.
- Centre National d'Etudes Spatiales (CNES)/France.
- China National Space Administration (CNSA)/People's Republic of China.
- Deutsches Zentrum für Luft- und Raumfahrt (DLR)/Germany.
- European Space Agency (ESA)/Europe.
- Federal Space Agency (FSA)/Russian Federation.
- Instituto Nacional de Pesquisas Espaciais (INPE)/Brazil.
- Japan Aerospace Exploration Agency (JAXA)/Japan.
- National Aeronautics and Space Administration (NASA)/USA.
- UK Space Agency/United Kingdom.

Observer Agencies

- Austrian Space Agency (ASA)/Austria.
- Belgian Federal Science Policy Office (BFSPO)/Belgium.
- Central Research Institute of Machine Building (TsNIIMash)/Russian Federation.
- China Satellite Launch and Tracking Control General, Beijing Institute of Tracking and Telecommunications Technology (CLTC/BITTT)/China.
- Chinese Academy of Sciences (CAS)/China.
- Chinese Academy of Space Technology (CAST)/China.
- Commonwealth Scientific and Industrial Research Organization (CSIRO)/Australia.
- Danish National Space Center (DNSC)/Denmark.
- Departamento de Ciência e Tecnologia Aeroespacial (DCTA)/Brazil.
- European Organization for the Exploitation of Meteorological Satellites (EUMETSAT)/Europe.
- European Telecommunications Satellite Organization (EUTELSAT)/Europe.
- Geo-Informatics and Space Technology Development Agency (GISTDA)/Thailand.
- Hellenic National Space Committee (HNSC)/Greece.
- Indian Space Research Organization (ISRO)/India.
- Institute of Space Research (IKI)/Russian Federation.
- KFKI Research Institute for Particle & Nuclear Physics (KFKI)/Hungary.
- Korea Aerospace Research Institute (KARI)/Korea.
- Ministry of Communications (MOC)/Israel.
- National Institute of Information and Communications Technology (NICT)/Japan.
- National Oceanic and Atmospheric Administration (NOAA)/USA.
- National Space Agency of the Republic of Kazakhstan (NSARK)/Kazakhstan.
- National Space Organization (NSPO)/Chinese Taipei.
- Naval Center for Space Technology (NCST)/USA.
- Scientific and Technological Research Council of Turkey (TUBITAK)/Turkey.
- South African National Space Agency (SANSA)/Republic of South Africa.
- Space and Upper Atmosphere Research Commission (SUPARCO)/Pakistan.
- Swedish Space Corporation (SSC)/Sweden.
- Swiss Space Office (SSO)/Switzerland.
- United States Geological Survey (USGS)/USA.


© ISO 2015 – All rights reserved
AVA Documents Document Sharing Hub
Full document details: BS ISO 20104:2015

# DOCUMENT CONTROL

| Document | Title | Date | Status |
|---|---|---|---|
| CCSDS 651.1-B-1 | Producer-Archive Interface Specification (PAIS), Recommended Standard, Issue 1 | February 2014 | Original issue |


© ISO 2015 – All rights reserved
AVA Documents Document Sharing Hub
Full document details: BS ISO 20104:2015

# CONTENTS

Section Page

**1 INTRODUCTION ..... 1-1**

1.1 PURPOSE AND SCOPE ..... 1-1
1.2 APPLICABILITY ..... 1-1
1.3 RATIONALE ..... 1-2
1.4 CONFORMANCE ..... 1-2
1.5 DOCUMENT STRUCTURE ..... 1-2
1.6 DEFINITIONS ..... 1-4
1.7 NOMENCLATURE ..... 1-7
1.8 REFERENCES ..... 1-8

**2 OVERVIEW ..... 2-1**

2.1 GENERAL FRAMEWORK ..... 2-1
2.2 FORMALLY DESCRIBING DATA OBJECTS FOR TRANSFER ..... 2-2
2.3 SIP CREATION AND VALIDATION ..... 2-4

**3 DESCRIPTIONS OF PRODUCER DATA ..... 3-1**

3.1 GENERAL ..... 3-1
3.2 TRANSFER OBJECT TYPE DESCRIPTOR SPECIFICATION (CCSD0014) ..... 3-1
3.3 COLLECTION DESCRIPTOR SPECIFICATION (CCSD0015) ..... 3-16
3.4 SPECIALIZATION OF THE DESCRIPTOR MODELS ..... 3-23

**4 DEFINITION OF CONSTRAINTS ON TYPES OF SIPS (CCSD0016) ..... 4-1**

4.1 OVERVIEW ..... 4-1
4.2 ABSTRACT SIP CONSTRAINTS ..... 4-1
4.3 SIP SEQUENCING CONSTRAINTS IMPLEMENTATION ..... 4-3

**5 ABSTRACT SIP SPECIFICATION (CCSD0017 ) ..... 5-1**

5.1 OVERVIEW ..... 5-1
5.2 SIP MODEL SPECIFICATION ..... 5-1
5.3 DISCUSSION ..... 5-8
5.4 SIP MODEL SPECIALIZATION ..... 5-10

**6 SIP IMPLEMENTATION ..... 6-1**

6.1 OVERVIEW ..... 6-1
6.2 SIP IMPLEMENTATION USING XFDU ..... 6-1
6.3 SPECIALIZATION OF THE SIP IMPLEMENTATION IN AN XFDU ..... 6-8


© ISO 2015 – All rights reserved
AVA Documents Document Sharing Hub
Full document details: BS ISO 20104:2015

## CONTENTS (continued)

Section Page

**ANNEX A PAIS XML SCHEMAS (NORMATIVE) ..... A-1**
**ANNEX B LEGEND FOR XML FIGURES (INFORMATIVE) ..... B-1**
**ANNEX C INFORMATIVE REFERENCES (INFORMATIVE) ..... C-1**
**ANNEX D MANAGEMENT OF IDS (INFORMATIVE) ..... D-1**
**ANNEX E SECURITY, SANA, AND PATENT CONSIDERATIONS (INFORMATIVE) ..... E-1**
**ANNEX F SIP TO XFDU MAPPING EXAMPLE (INFORMATIVE) ..... F-1**

Figure

2-1 PAIS General Process ..... 2-2
2-2 An Example of the Entities and Their Relationships Involved in Creating the Formal Specifications ..... 2-4
2-3 SIP Process ..... 2-6
3-1 First Decomposition Level of ‘transferObjectTypeDescriptor’ ..... 3-3
3-2 Complete Decomposition of the ‘transferObjectTypeDescriptor’ ..... 3-4
3-3 Transfer Object Type Descriptor ‘identification’ ..... 3-6
3-4 Transfer Object Type Descriptor ‘description’ ..... 3-8
3-5 Transfer Object Type Descriptor ‘relation’ ..... 3-9
3-6 Transfer Object Type Descriptor ‘groupType’ ..... 3-15
3-7 Transfer Object Type Descriptor ‘any’ ..... 3-16
3-8 First Decomposition Level of ‘collectionDescriptor’ ..... 3-18
3-9 Complete Decomposition of a ‘collectionDescriptor’ ..... 3-18
3-10 Collection Descriptor ‘identification’ ..... 3-20
3-11 Collection Descriptor ‘description’ ..... 3-21
3-12 Collection Descriptor ‘relation’ ..... 3-22
3-13 Collection Descriptor ‘any’ ..... 3-22
3-14 Specialization of the Descriptor Models ..... 3-23
4-1 Decomposition of ‘sipConstraints’ ..... 4-3
5-1 Abstract View of the SIP Container ..... 5-2
5-2 Abstract View of the Transfer Object Container ..... 5-4
5-3 Abstract View of the Transfer Object Group Container ..... 5-5
5-4 Abstract View of the Data Object Container ..... 5-7
5-5 Abstract View of SIP, Transfer Object, Transfer Object Group, and Data Object ..... 5-9
5-6 Specialization of the SIP Model ..... 5-10
6-1 SIP and XFDU Schemas Constrain the XFDU XML Manifest to Implement the SIP as an XFDU ..... 6-2
6-2 SIP Global Information ..... 6-3
6-3 SIP Transfer Object Identification and Status ..... 6-4
6-4 SIP Transfer Object Group Identification ..... 6-4
6-5 SIP Data Object Identification ..... 6-5


© ISO 2015 – All rights reserved
AVA Documents Document Sharing Hub
Full document details: BS ISO 20104:2015

## CONTENTS (continued)

Figure Page

6-6 SIP Transfer Object To Delete ..... 6-5
6-7 Any Extension Type ..... 6-5
6-8 sipGlobalInformation Mapped to XFDU ..... 6-6
6-9 sipTransferObject Mapped to XFDU ..... 6-7
6-10 Byte Stream Mapped to XFDU byteStream Element ..... 6-8
B-1 Legend for XML Figures ..... B-2


© ISO 2015 – All rights reserved
AVA Documents Document Sharing Hub
Full document details: BS ISO 20104:2015

Documents
Document Sharing Hub

Full document details: BS ISO 20104:2015

# 1 INTRODUCTION

## 1.1 PURPOSE AND SCOPE

The purpose of this Recommended Standard is to provide a standard method for formally defining the digital information objects to be transferred by an information Producer to an Archive and for effectively packaging these objects in the form of **Submission Information Packages (SIPs).** This supports effective transfer and validation of SIP data.

This Recommended Standard fits into the context defined by:

- The *Reference Model for an Open Archival Information System (OAIS)* Recommended Standard (see reference [3]).
- The *Producer-Archive Interface Methodology Abstract Standard* (PAIMAS) Recommended Standard (see reference [2]).
- The *XML Formatted Data Unit (XFDU) Structure and Construction Rules* Recommended Standard (see reference [1]).

The PAIMAS Recommended Standard (see reference [2]) defines a methodology based on the four following phases: Preliminary, Formal Definition, Transfer, Validation.

This Recommended Standard applies specifically to the implementation of the main part of the Formal Definition Phase and the Transfer Phase, taking into account part of the Validation Phase.

The proposed implementation should help in the automation and management of the Transfer and Validation Phases.

The proposed implementation may also be used, to some extent, for the Preliminary Phase.

This Recommended Standard does not exclude other PAIMAS implementation Recommended Standards.

## 1.2 APPLICABILITY

The implementation defined in this document applies to any **Producer-Archive Project**. It is specifically applicable to those organizations and individuals who create information that may need Long-Term Preservation and to organizations making information available for the Long Term.

This application is relevant only if both partners in the Producer-Archive Project agree with a shared implementation as defined in this document.


© ISO 2015 – All rights reserved
AVA Documents Document Sharing Hub
Full document details: BS ISO 20104:2015

## 1.3 RATIONALE

This Recommended Standard aims at overcoming significant difficulties encountered during transactions between information Producers and the Archives.

Regarding the Formal Definition Phase, this Recommended Standard should enable:

- the Producer to share with the Archive a sufficiently precise, unambiguous definition of the different Digital Objects to be produced and transferred, including possibly the order in which they should be transferred;
- the Archive to ensure there is sufficient information to process the Digital Objects which will be received.

Regarding the Transfer Phase, this Recommended Standard should enable a precise definition of the SIPs to be exchanged.

Regarding the Validation Phase, this Recommended Standard should enable the use of tools for systematically validating that the Digital Objects received are those expected, and that they conform to the level of detail previously agreed.

## 1.4 CONFORMANCE

An xml implementation is considered 'Description Conformant' if it conforms to the corresponding semantics and implementation specifications defined in sections 3 and 4.

A concrete SIP implementation is considered 'Abstract SIP Conformant' if it conforms to the semantic specification of section 5.

A concrete SIP implementation is considered 'XFDU PAIS SIP Conformant' if it conforms to the semantic specification of section 5 and the implementation specification of section 6.

Concrete SIP implementations in formats other than XFDU are allowed. They will not be considered 'XFDU PAIS SIP Conformant', but they could be 'Abstract SIP Conformant'. It is possible that additional concrete PAIS SIP implementations may be standardized in the future.

## 1.5 DOCUMENT STRUCTURE

### 1.5.1 HOW TO READ THIS DOCUMENT

All readers should study subsections 1.1 (Purpose and Scope), 1.2 (Applicability), and 1.4 (Conformance) in order to understand the objectives and applicability of this Recommended Standard.

Readers seeking an overview of the specification should also read section 2 (Overview).


© ISO 2015 – All rights reserved
AVA Documents Document Sharing Hub
Full document details: BS ISO 20104:2015

Those who will implement the specification should read the entire document.

NOTE – A working knowledge of the concepts defined in the PAIMAS (reference [2]), and of the XFDU structure and construction rules (reference [1]) may be helpful in order to understand this Recommended Standard.

### 1.5.2 ORGANIZATION BY SECTION

Section 0 defines the purpose, scope, applicability, rationale and definitions for terminology used in this Recommended Standard. It also specifies what is required for conformance to this standard.

Section 2 contains a general overview of the specification. This overview describes the general framework of the PAIS using terms and concepts from reference [2]. It addresses a formal description of the Data Objects for transfer and the creation and validation of the SIPs containing those Data Objects.

Section 3 analyzes in detail the model of the Data Objects to be transferred by the Producer to the Archive. These Data Objects are organized into collections and Transfer Objects that are described in detail. Each description is divided into an abstract view, followed by the implementation view (partial schemas).

Section 4 describes the two different constraints that apply to the SIPs. The first one specifies the content authorized for each type of SIP. The second one specifies, if necessary, in which order the SIPs must be delivered. Each part is divided into an abstract view, followed by the implementation view (partial schemas).

Section 5 describes in detail the different SIP organizing entities, called containers.

Section 6 specifies a concrete SIP implementation using the XFDU (reference [1], partial schemas), and explains how it maps to the XFDU XML schema.

The annexes listed here are normative or informative:

- Annex A contains the full XML schemas for this specification and is normative. XML schema diagrams are presented throughout other sections of the book. If an XML schema diagram differs from the schema, the schema is considered to be the ruling entity.
- Annex B is a legend for symbols for the XML Authority Diagrams that appears in sections 3 to 6 of this document and is informative.
- Annex C contains the informative references.
- Annex D provides a table showing the management of the different identifiers defined in this document and is informative.


© ISO 2015 – All rights reserved
Documents
Document Sharing Hub
Full document details: BS ISO 20104:2015

– Annex E discusses Security, Space Assigned Numbers Authority (SANA), and Patent Considerations and is informative.

– Annex F provides an example SIP, with Descriptors, and the mapping of the SIP to the XFDU, and is informative.

## 1.6 DEFINITIONS

### 1.6.1 ACRONYMS AND ABBREVIATIONS

This subsection defines the acronyms and abbreviations which are used throughout this Recommended Standard:

| | |
|---|---|
| **AIP** | Archival Information Package |
| **CCSDS** | Consultative Committee for Space Data Systems |
| **CCSDS CA** | CCSDS Control Authority |
| **CRC** | Cyclic Redundancy Check |
| **DED** | Data Entity Dictionary |
| **DTD** | Document Type Definition |
| **FTP** | File Transfer Protocol |
| **GB** | Gigabyte |
| **ID** | Identifier |
| **IETF** | Internet Engineering Task Force |
| **ISO** | International Organization for Standardization |
| **KB** | Kilobyte |
| **MB** | Megabyte |
| **MIME** | Multipurpose Internet Mail Extensions |
| **MOT** | Model of Objects for Transfer |
| **OAIS** | Open Archival Information System |
| **PAIMAS** | Producer Archive Interface Methodology Abstract Standard |
| **PAIS** | Producer-Archive Interface Specification |
| **PB** | Petabyte |
| **SIP** | Submission Information Package |
| **TB** | Terabyte |
| **TOTD** | Transfer Object Type Descriptor |
| **URL** | Universal Resource Locator |
| **XFDU** | XML Formatted Data Unit |
| **XML** | eXtensible Markup Language |


© ISO 2015 – All rights reserved
AVA Documents Document Sharing Hub
Full document details: BS ISO 20104:2015

### 1.6.2 GLOSSARY OF TERMS

OAIS terminology as defined in references [2] is used throughout this recommendation. Following is a short glossary of the OAIS terminology indispensable for this document. The terminology used is fully defined in references [2], [3], and [C3], except for the definitions printed in italics which are defined in this document. Only brief definitions are provided here. This terminology does not seek to replace existing terminology in the various domains related to archiving. Each domain should be able to apply this methodology while retaining their specific terminology. When first used in the following sections, the terms defined in the terminology are shown in bold.

Moreover, it is assumed that it is not necessary for the Producer to know and understand the information model and the typology of the OAIS information categories in detail, such as Content Information, Representation Information, Preservation Description Information, etc. Indeed, it is the Archive's task to create AIPs from the SIPs transferred and thus to establish the suitable link between a given object coming from the Producer and any particular information category in the AIP within which this object will be inserted. To establish a dialog, the Producer and the Archive must agree on a common terminology and a common understanding of the associated concepts.

**Archive**: An organization that intends to preserve information for access and use by a Designated Community.

***Collection Descriptor***: *A set of attributes that describes a view of a single collection of data and that identifies the parent collection of which it is a part.*

**Data Object:** Either a Physical Object or a Digital Object.

***Data Object Type***: *A set of characteristics describing a Data Object (such as the size of this object and the description of its content). Typically there will be multiple Data Objects conforming to the same Data Object Type.*

***Descriptor***: *Either a Collection Descriptor or a Transfer Object Type Descriptor.*

***Descriptor Model:*** *A model that defines the mandatory and optional attributes needed for a Collection Descriptor or a Transfer Object Type Descriptor.*

**Digital Object:** An object composed of a set of bit sequences.

**Fixity Information**: The information which documents the mechanisms that ensure that the Content Information Object has not been altered in an undocumented manner. An example is a Cyclical Redundancy Check (CRC) code for a file.

**Information**: Any type of knowledge that can be exchanged. In an exchange, it is represented by data. An example is a string of bits (the data) accompanied by a description of how to interpret a string of bits as numbers representing temperature observations measured in degrees Celsius (the Representation Information).


© ISO 2015 – All rights reserved
AVA Documents Document Sharing Hub
Full document details: BS ISO 20104:2015

**Information Package:** A conceptual container composed of optional Content Information and optional associated Preservation Description Information. Associated with this Information Package is Packaging Information used to delimit and identify the Content Information and Package Description Information used to facilitate searches for the Content Information.

**Model**: A data entity described independently from any instance in a data product, and corresponding to a re-usable data entity definition, from which other data entities may inherit the attributes and apply some specialization rules (see reference [C3]).

***Model of Objects for Transfer (MOT):*** *The set of all Descriptors for a given Producer-Archive Project. It is used jointly by the Producer and the Archive to provide a common and understandable hierarchical view of the Producer's Data Objects to be transferred and their organization into collections, and it supports possible additional relationships among them. The hierarchy may be viewed as a tree having leaf and non-leaf nodes. The Data Objects to be transferred, organized as 'Transfer Objects,' are represented by the leaves of the MOT. Thus the nodes of the MOT have a different meaning depending on whether they are leaves or not:*

- *A leaf node corresponds to a single Transfer Object Type and therefore one exists for each Transfer Object Type Descriptor.*
- *A non-leaf node corresponds to a collection view of Transfer Object Types, or of a collection of collections. A non-leaf node exists for each Collection Descriptor.*

**Producer:** The role played by those persons or client systems who provide the information to be preserved. This can include other OAISes or internal OAIS persons or systems.

**Producer-Archive Project**: A Producer-Archive Project is a set of activities and the means used by the information Producer as well as the Archive to ingest a given set of information into the Archive.

**Submission Agreement:** The agreement reached between an OAIS and the Producer that specifies a data model, and any other arrangements needed, for the Data Submission Session. This data model identifies format/contents and the logical constructs used by the Producer and how they are represented on each media delivery or in a telecommunication session.

**Submission Information Package (SIP):** An Information Package that is delivered by the Producer to the OAIS for use in the construction or update of one or more AIPs and/or the associated Descriptive Information.

***Transfer Object****: A set of one or more Transfer Object Groups containing at least one Data Object that are to be transferred to the Archive.*

***Transfer Object Group:*** *A set of zero or more Data Objects and zero or more Transfer Object Groups.*


© ISO 2015 – All rights reserved
AVA Documents Document Sharing Hub
Full document details: BS ISO 20104:2015

***Transfer Object Group Type:*** *A set of characteristics describing a Transfer Object Group. Typically there can be multiple Transfer Object Groups conforming to the same Transfer Object Group Type.*

***Transfer Object Type****: A set of characteristics describing a Transfer Object (such as the size of this object, the description of its content, and its makeup in terms of one or more Data Object Types). Typically there can be multiple Transfer Objects conforming to the same Transfer Object Type.*

***Transfer Object Type Descriptor****: A set of attributes that describes a Transfer Object Type and that identifies the parent collection of which it is a part.*

## 1.7 NOMENCLATURE

### 1.7.1 NORMATIVE TEXT

The following conventions apply for the normative specifications in this Recommended Standard:

a) the words ‘shall’ and ‘must’ imply a binding and verifiable specification;

b) the word ‘should’ implies an optional, but desirable, specification;

c) the word ‘may’ implies an optional specification;

d) the words ‘is’, ‘are’, and ‘will’ imply statements of fact.

NOTE – These conventions do not imply constraints on diction in text that is clearly informative in nature.

### 1.7.2 INFORMATIVE TEXT

In the normative sections of this document (sections 3-6), informative text is set off from the normative specifications either in notes or under one of the following subsection headings:

– Overview;

– Background;

– Rationale;

– Discussion.


© ISO 2015 – All rights reserved
AVA Documents Document Sharing Hub
Full document details: BS ISO 20104:2015

## 1.8 REFERENCES

The following documents contain provisions which, through reference in this text, constitute provisions of this Recommended Standard. At the time of publication, the editions indicated were valid. All documents are subject to revision, and users of this Recommended Standard are encouraged to investigate the possibility of applying the most recent editions of the documents indicated below. The CCSDS Secretariat maintains a register of currently valid CCSDS Recommended Standards.

[1] *XML Formatted Data Unit (XFDU) Structure and Construction Rules*. Issue 1. Recommendation for Space Data System Standards (Blue Book), CCSDS 661.0-B-1. Washington, D.C.: CCSDS, September 2008. [Equivalent to ISO 13527:2010.]

[2] *Producer-Archive Interface Methodology Abstract Standard*. Issue 1. Recommendation for Space Data System Practices (Magenta Book), CCSDS 651.0-M-1. Washington, D.C.: CCSDS, May 2004. [Equivalent to ISO 20652:2006.]

[3] *Reference Model for an Open Archival Information System (OAIS)*. Issue 2. Recommendation for Space Data System Practices (Magenta Book), CCSDS 650.0-M-2. Washington, D.C.: CCSDS, June 2012. [Equivalent to ISO 14721:2012.]


© ISO 2015 – All rights reserved
AVA Documents Document Sharing Hub
Full document details: BS ISO 20104:2015

# 2 OVERVIEW

## 2.1 GENERAL FRAMEWORK

The general context for this Recommended Standard is that of the transfer of **Digital Objects** from a data **Producer** to an **Archive**. A methodology for specifying, performing, and validating this transfer is defined in the PAIMAS Recommended Standard (see reference [2]).

A key objective of the PAIS Recommended Standard is to provide a method to formally define the Digital Objects, along with their important inter-relationships, that are to be transferred by a data Producer to an Archive. This is performed during the Formal Definition Phase as defined in PAIMAS.

Another objective is to support the effective transfer of these objects in the form of **Submission Information** Packages (SIPs) as modeled in the OAIS Reference Model (see reference [3]). If these objectives are met, use of the PAIS Recommended Standard should facilitate validation by the Archive that all the objects expected have been received and that they conform to the characteristics expected. This is performed during the Transfer Phase and the Validation Phase.

A high-level view of the process involving use of this Recommended Standard is given in figure 2-1. This process shows a breakdown into two phases: Formal Definition and Transfer with Validation. **Data Objects** are formally defined using **Descriptors**, and then constraints on their transfer in terms of grouping and sequencing are addressed. This is negotiated with the Producer and results in the **Submission Agreement**. During the Transfer Phase the Data Objects are packaged into SIPs with links to their associated Descriptors, thus allowing the Archive to perform validation on each Data Object.

The PAIS Recommended Standard specifies how to construct Descriptors, how to define types of SIPs, and how to define any sequencing constraints among types of SIPs. It also specifies an abstract SIP and how to instantiate this within a standardized data package known as an XFDU (see reference [1]). It does not address the actual transfer of a SIP nor how the Archive does validation upon the received SIP. The extent of such validation will depend, in part, on the details of Descriptor implementations and the level of validation required by the **Producer-Archive Project**.


© ISO 2015 – All rights reserved
AVA Documents Document Sharing Hub
Full document details: BS ISO 20104:2015

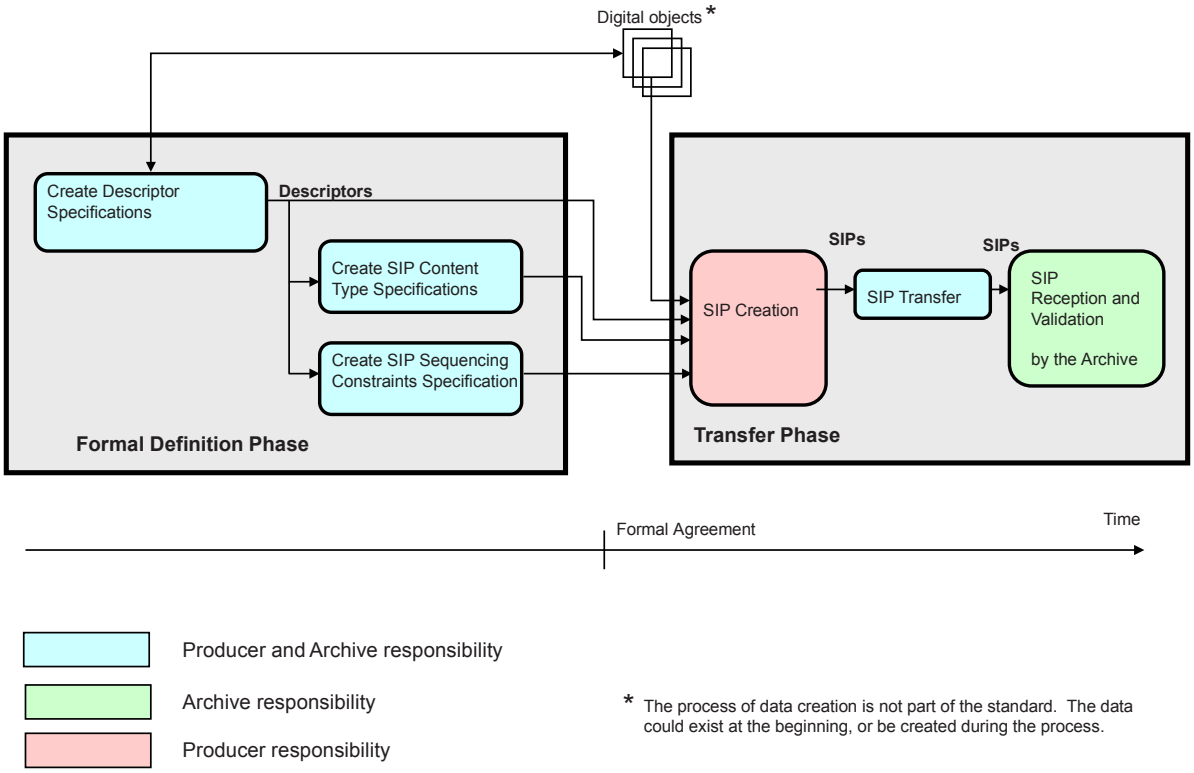


**Figure 2-1: PAIS General Process**

## 2.2 FORMALLY DESCRIBING DATA OBJECTS FOR TRANSFER

An example of the process for generating formal specification material is shown in figure 2-2.

One of the objectives of the Formal Definition Phase is to define the Data Objects, where hereafter a Data Object is understood to be one or more data files, to be transferred as possibly more complex data structures called **Transfer Objects**. Each Transfer Object is an instance of a particular **Transfer Object Type**. Each Transfer Object Type is described in detail by a **Transfer Object Type Descriptor**. A Transfer Object Type Descriptor consists of a set of mandatory, optional, and possibly user-defined attributes, and is generated for each type of Transfer Object. A collection of Transfer Object Types, or a collection of other collections, is described by a **Collection Descriptor**. It also consists of a set of mandatory, optional, and possibly user defined attributes. The Transfer Object Type and Collection Descriptors are expected to be complete enough to provide the information needed for an adequate description of different types of objects to be transferred to the Archive, and they are expected to be flexible enough to adapt to the specializations required by each Producer-Archive Project. One Collection Descriptor will be generated for each collection view. Both Transfer Object Type Descriptors and Collection Descriptors have attributes giving relationships among the Data Objects they are describing. The set of Descriptors for a Producer-Archive Project constitutes a **Model** called the **Model of Objects for Transfer (MOT)** for that project. Each Descriptor has a mandatory relationship-attribute, called 'parentCollection', that identifies the Collection Descriptor that provides a collection view of


© ISO 2015 – All rights reserved
AVA Documents Document Sharing Hub
Full document details: BS ISO 20104:2015

the subject Descriptor's Data Objects. The resulting hierarchical view of Descriptors and the data they describe constitute an important aspect of the MOT.

It should be noted that the MOT is not an information organization model within the Archive. It is simply a way to enable the Producer and Archive to agree on the content of the information to be transferred. As such the MOT is the basis for negotiating a Submission Agreement. It should be noted also that each Descriptor has optional and possibly user defined attributes. This allows an Archive to tailor the two **Descriptor Models** (Transfer Object Type and collection) given in this Recommended Standard to meet the needs of describing the data to be transferred in a given Producer-Archive Project.

In the remainder of this document, the term 'Descriptor' is used for a Transfer Object Type Descriptor or a Collection Descriptor, and the phrase 'Transfer Object' is used to refer to an instance, while 'Transfer Object Type' or 'type of Data Object' is used to refer to the class of a Transfer Object or Data Object.

Section 3 contains the requirements from the Producer and the Archive to specify and implement the MOT during the Formal Definition Phase, described just above.

Another objective of the Formal Definition Phase is the consideration of whether some SIPs will be allowed to carry only some Transfer Object Types and not others, thereby defining SIP Content Type constraints, and whether some SIPs will need to be processed by the Archive before other SIPs, thereby defining SIP sequencing constraints. This is shown schematically in figure 2-2. This Recommended Standard requires that a Transfer Object, and therefore also a Data Object, shall not be divided between two or more SIPs. This is to facilitate management of the Transfer Object exchange.

Section 4 contains the requirements from the Producer and the Archive to specify and implement the SIP Content Type constraints and the sequencing constraints during the Formal Definition Phase.

At this stage of negotiation between the Producer and the Archive, some characteristics of the objects to be transferred may not be known. How and when these unknowns will be defined should be detailed in the Submission Agreement. However, both the Archive and the Producer should each have the necessary information to negotiate and approve the MOT and the noted constraints.


© ISO 2015 – All rights reserved
AVA Documents Document Sharing Hub
Full document details: BS ISO 20104:2015

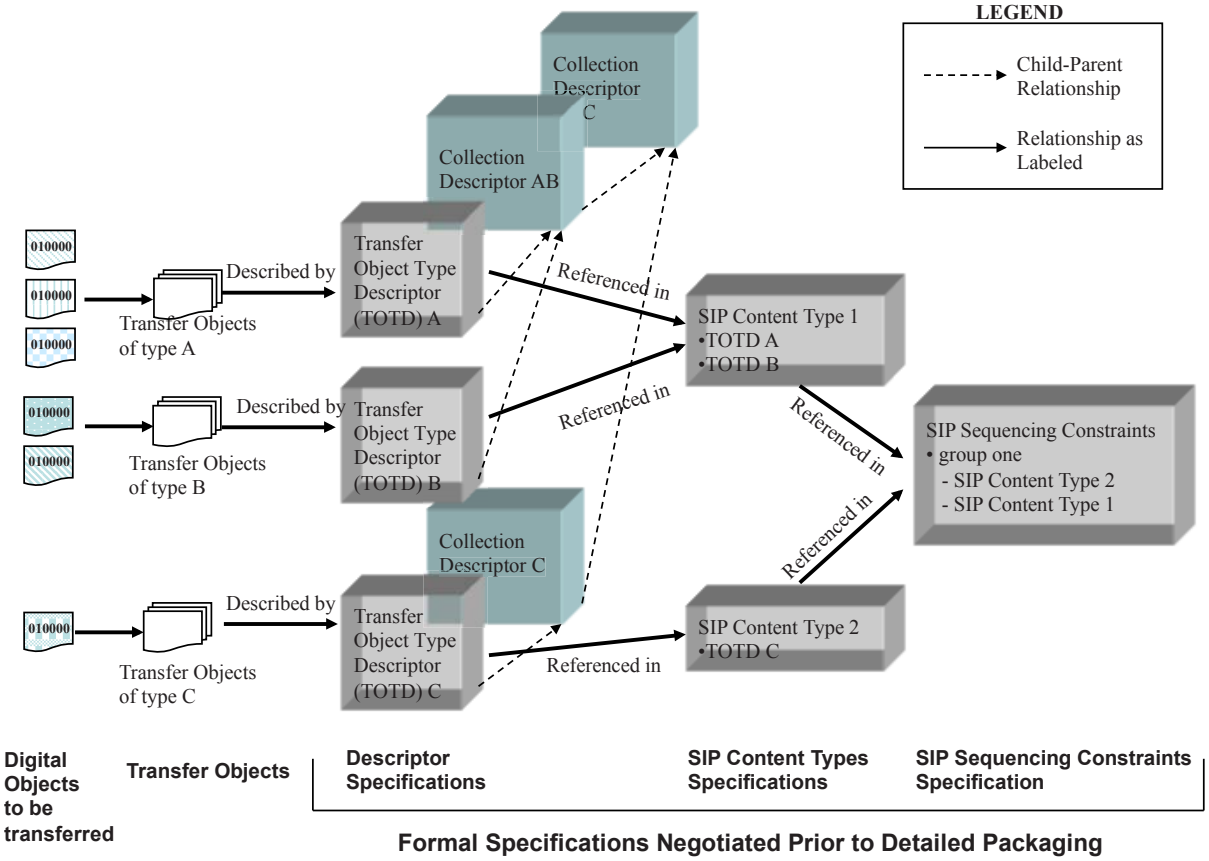


**Figure 2-2: An Example of the Entities and Their Relationships Involved in Creating the Formal Specifications**

## 2.3 SIP CREATION AND VALIDATION

Figure 2-3 shows the process of building the SIPs.

A SIP can simply be a coherent group of Data Objects which is transferred in the same package. A SIP may also contain a pointer to the Data Objects location in case the Data Objects are not physically transferred in the SIP. For example, a URL or FTP site may be referenced in the SIP.

These Data Objects may be grouped together in a SIP for very different reasons. For example:

- Because of Archive procedures, it may be necessary for the Archive to have several Data Objects made available within the same SIP package in order to be able to create the corresponding AIPs.
- It might be useful to optimize the transfer: if the Data Objects are very small, a decision may be taken to group several of these Data Objects together in a single package so as not to have too many packages.


© ISO 2015 – All rights reserved
AVA Documents Document Sharing Hub
Full document details: BS ISO 20104:2015

Each Data Object is considered as a whole, which means in particular that the different bit sequences that make up the Data Object may not be separated into elements transferred in separate SIPs.

**Introduction to SIP abstract model and mapping to XFDU:**

Once the formal specifications have been negotiated and agreed, the next step is the creation of SIPs. Section 5 contains a complete description of the abstract SIP Model and section 6 contains its implementation with a mapping to XFDU.

Typically, the SIP carries one or more Transfer Objects and for each such object, identifies its Descriptor ID, the Data Objects that make up this Transfer Object, and the **Data Object Type** IDs for each of these Data Objects. The location of the Data Objects within the SIP must also be given. Since a Transfer Object may be as complex as a directory structure, a given Data Object may also need to be associated with a directory path and directory name. A Transfer Object may also carry an indication as to whether this is the last Transfer Object of this type that the Archive should receive. A SIP must also carry some global information that allows the Archive to recognize its origin and type.

**During the Transfer and Validation Phases, the following scenario is expected to take place:**

1. SIP Creation by the Producer.

During the Transfer Phase, the SIPs will be created from an Abstract SIP Model, for the objects to be delivered, according to the SIP Content Types defined during the Formal Definition Phase. This document specifies a SIP Abstract Model in section 5 and a concrete specification in section 6.

2. SIP Transfer between the Producer and the Archive.

This transfer is performed according to the agreements between the Producer and the Archive. It follows the SIP Sequencing Constraints to transfer the SIPs in the order specified. The SIP Sequencing Constraints have been defined during the Formal Definition Phase.

3. SIP Reception and Validation by the Archive.

After the reception of a SIP, the Archive performs the initial validations on the received SIP and may check that:

- the SIP conforms to the associated SIP Content Type;
- any Digital Object transferred is an expected Digital Object in the previously defined MOT;
- this Digital Object complies with the characteristics defined in the MOT, including the number expected, and the required structure of the data is preserved, such as a hierarchical structure of files in directories;


© ISO 2015 – All rights reserved
AVA Documents Document Sharing Hub
Full document details: BS ISO 20104:2015

– the Digital Objects have been transferred in the right order (sequencing constraints);

– the Digital Objects conform to any supplied checksums.

Should any validations fail, the Archive follows previously agreed procedures for Archive-Producer communications.

This document does not specify how to define and perform the validation plans, nor the Producer-Archive communications.

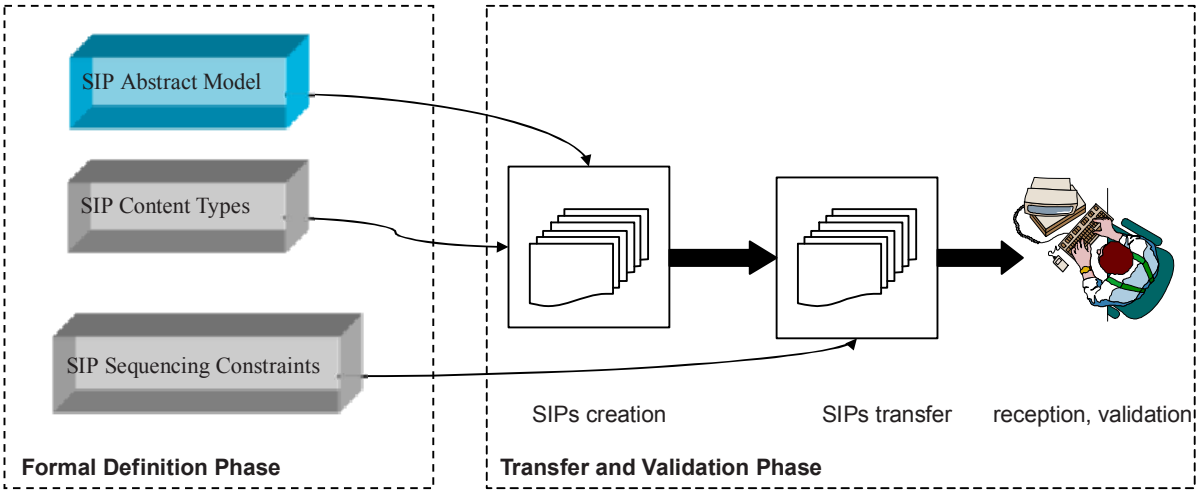


**Figure 2-3: SIP Process**


© ISO 2015 – All rights reserved
AVA Documents Document Sharing Hub
Full document details: BS ISO 20104:2015

# 3 DESCRIPTIONS OF PRODUCER DATA

## 3.1 GENERAL

**3.1.1** The following Descriptor Models shall be used for the modeling of data to be provided to an Archive:

– Model for the Transfer Object Type Descriptor (3.2);

– Model for the Collection Descriptor (3.3).

**3.1.2** Each model shall be implemented using XML and shall conform to the XML schema given in annex A.

**3.1.3** When XML schema diagrams are given, they are informative, as the XML schema of annex A is ruling should any conflict arise.

NOTES

1 Each model is specified using a language composed of attributes. The attributes are grouped into categories for ease of understanding. The meanings associated with the categories and the individual attributes are specified under an 'abstract' heading. This is immediately followed by a view of the concrete specification of the attributes using XML schema diagrams. The complete XML schema code is given in annex A and is normative.

2 Annex B gives the rules that apply for the notations of the XML schema diagrams.

**3.1.4** The specifications that follow shall be understood in the context of a single Producer-Archive Project.

**3.1.5 Each Producer-Archive Project shall be assigned a Producer-Archive Project identifier that must be unique across all such projects within the Archive.**

NOTE – Annex D contains an overall table of identifiers management.

## 3.2 TRANSFER OBJECT TYPE DESCRIPTOR SPECIFICATION (CCSD0014)

### 3.2.1 TOP-LEVEL SPECIFICATION

#### 3.2.1.1 Abstract View Top-Level Specification

**3.2.1.1.1** The Transfer Object Type Descriptor shall be composed of a set of attributes and values that are assigned to these attributes in order to characterize the described Digital Object Types.

**3.2.1.1.2** These attributes shall be grouped into the following top-level categories with the following definitions:


© ISO 2015 – All rights reserved
AVA Documents Document Sharing Hub
Full document details: BS ISO 20104:2015

– **Descriptor Identification**: set of attributes supporting the unique identification of the Transfer Object Type Descriptor within the Producer-Archive Project. Users may incorporate additional attributes as needed to further specialize the Descriptor Identification.

– **Transfer Object Type Description**: set of attributes giving a high-level description of the Transfer Object Type, such as the title, the content, and the size. Users may incorporate additional attributes as needed to further specialize the Transfer Object Type Description.

– **Transfer Object Type Relationships:** set of attributes that identify the collection to which the Transfer Object Types under this Descriptor are a part, and optionally that specify directional relationships between these Transfer Object Types and other Data Object Types, Transfer Object Types, Transfer Object Group Types, and collections. These relationships are specified using identifiers as given within the Descriptors of the MOT. Users may incorporate additional attributes as needed to further specialize the Transfer Object Type Relationships.

– **Transfer Object Group Types**: set of attributes that identify one or several Group Types. A Group Type is a set of characteristics describing zero or more Data Object Types, even complex Data Objects Types made up of several parts. The Transfer Object Group Type may contain additional Transfer Object Group Types in support of complex structures such as directory structures. Users may incorporate additional attributes as needed, such as relative pathnames, to further specialize the Transfer Object Group Types.

– **User Defined Attributes**: new attributes that users may incorporate as needed to further specialize the Transfer Object Type Descriptor.

NOTES

1 In the following, each attribute has a mandatory or optional status, and has an occurrence. In the text, the occurrence is indicated between parentheses (min..max) after the name of the attribute; a zero value means that the attribute is optional, and it is mandatory otherwise.

2 The attributes themselves belong to groups that can be mandatory or optional. Inside an optional group, an attribute may be mandatory meaning that the attribute must be present if there is an instance of that group. (On the contrary, inside a mandatory group an attribute may be optional.)

#### 3.2.1.2 XML Schema of Top-Level Specification

**3.2.1.2.1** The Transfer Object Type Descriptor shall conform to the complete XML schema given in A2, and common types given in A1.


© ISO 2015 – All rights reserved
AVA Documents Document Sharing Hub
Full document details: BS ISO 20104:2015

**3.2.1.2.2** The Transfer Object Type Descriptor XML schema shall contain XML elements corresponding to the top-level categories as specified in the abstract view given above.

### 3.2.1.3 Discussion

Figure 3-1 provides the schema diagram for this first-level decomposition of the Transfer Object Type Descriptor. Figure 3-2 provides the schema diagram for the complete decomposition of the Transfer Object Type Descriptor. Descriptor attributes are implemented as XML elements.

In the next section the semantics for each attribute in a category are given along with a view of the subset of the XML schema that applies.

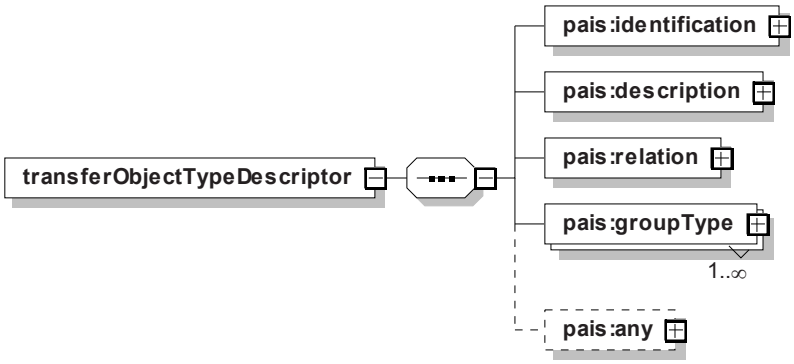


**Figure 3-1: First Decomposition Level of 'transferObjectTypeDescriptor'**


© ISO 2015 – All rights reserved
Documents
Document Sharing Hub
Full document details: BS ISO 20104:2015

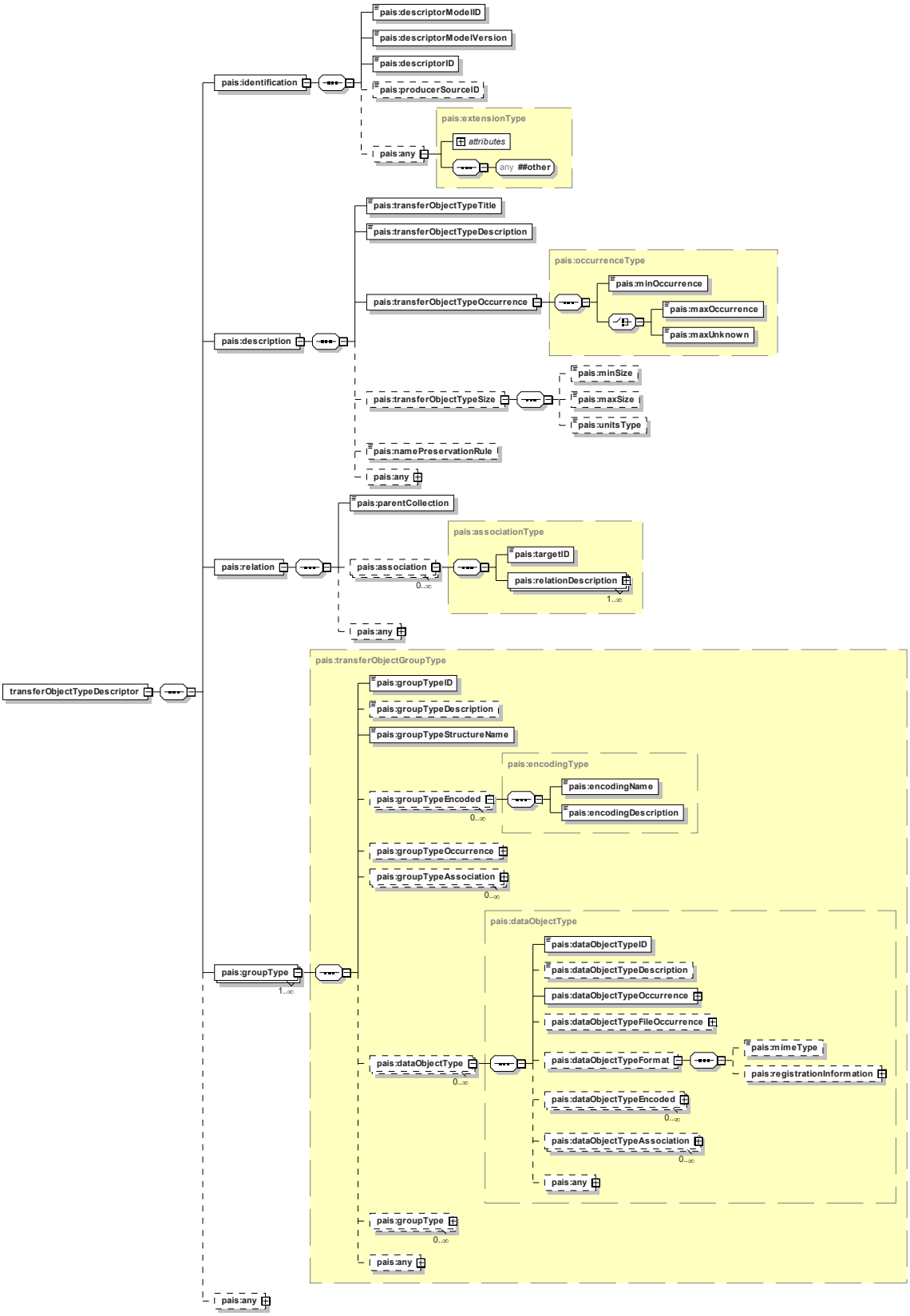


**Figure 3-2: Complete Decomposition of the 'transferObjectTypeDescriptor'**


© ISO 2015 – All rights reserved
AVA Documents Document Sharing Hub
Full document details: BS ISO 20104:2015

### 3.2.2 DETAILED DESCRIPTION

#### 3.2.2.1 General

**3.2.2.1.1** Each attribute in the identified categories shall have the semantics as specified in the following subsections having the introductory phrase 'Abstract view'.

**3.2.2.1.2** Each attribute in the identified categories shall be implemented in accordance with the XML schemas as identified in the following subsections having the introductory phrase 'Implementation: XML schema'.

#### 3.2.2.2 Transfer Object Type Identification

– **Abstract View**:

**Identification (1..1)**

- **Descriptor Model ID (1..1)**: identifier of the Transfer Object Type Descriptor Model upon which this Descriptor is based. It may be the Descriptor Model as given in the standard or it may be a specialized version as described in detail in 3.4. It shall be unique across the Producer-Archive Project and shall be provided by the Archive.

  The standard value for this ID, when no specialization has been employed, is 'CCSD0014'. When specialization has been employed, the value for the Descriptor Model ID should be agreed between the Producer and the Archive.

- **Descriptor Model Version (1..1)**: identifier of the version of the Descriptor Model. This allows tracking updates to the identified Descriptor Model.

  The standard value for this ID, when the Descriptor Model ID is 'CCSD0014' and no revisions to this standard model have occurred, is 'V1.0'. When specialization has been employed, the value for the Descriptor Model Version shall be agreed between the Producer and the Archive.

- **Descriptor ID (1..1)**: identifier of this Descriptor within the Producer-Archive Project. Uniqueness shall be checked by the Archive. This identifier may be used by a relationship attribute to refer to this Transfer Object Type.

- **Producer Source ID (0..N):** identifier of the Producer Source sufficient to enable the Archive to identify the origin of the SIP and to send an acknowledgement. There may be multiple Producer Sources sending SIPs to the Archive within a given Producer-Archive Project. The form of the Producer Source ID shall be agreed between Producer and Archive. If specified, only those Producer Sources identified here may include Transfer Objects, of this Transfer Object Type, in SIPs.

- **Any (0..N)**: mechanism that allows any new attribute(s) to be added as needed.


© ISO 2015 – All rights reserved
AVA Documents Document Sharing Hub
Full document details: BS ISO 20104:2015