BS ISO 20176:2020

BSI Standards Publication

Road vehicles — H-point machine (HPM-II) — Specifications and procedure for H-point determination

Documents
Document Sharing Hub

Full document details: BS ISO 20176:2020

National foreword

This British Standard is the UK implementation of ISO 20176:2020. It supersedes BS ISO 20176:2011, which is withdrawn.

The UK participation in its preparation was entrusted to Technical Committee AUE/12, Ergonomics (Road vehicles).

A list of organizations represented on this committee can be obtained on request to its committee manager.

This publication does not purport to include all the necessary provisions of a contract. Users are responsible for its correct application.

© The British Standards Institution 2020
Published by BSI Standards Limited 2020

ISBN 978 0 580 99663 4

ICS 43.040.60; 43.020

Compliance with a British Standard cannot confer immunity from legal obligations.

This British Standard was published under the authority of the Standards Policy and Strategy Committee on 30 September 2020.

Amendments/corrigenda issued since publication

Date	Text affected

Documents
Document Sharing Hub

Full document details: BS ISO 20176:2020

INTERNATIONAL STANDARD

ISO 20176

Third edition
2020-09

Road vehicles — H-point machine (HPM-II) — Specifications and procedure for H-point determination

Véhicules routiers — Machine point H (HPM-II) — Spécifications et procédure pour la détermination du point H

Reference number
ISO 20176:2020(E)

Documents
Document Sharing Hub

© ISO 2020

Full document details: BS ISO 20176:2020

COPYRIGHT PROTECTED DOCUMENT

© ISO 2020

All rights reserved. Unless otherwise specified, or required in the context of its implementation, no part of this publication may be reproduced or utilized otherwise in any form or by any means, electronic or mechanical, including photocopying, or posting on the internet or an intranet, without prior written permission. Permission can be requested from either ISO at the address below or ISO's member body in the country of the requester.

ISO copyright office
CP 401 • Ch. de Blandonnet 8
CH-1214 Vernier, Geneva
Phone: +41 22 749 01 11
Email: copyright@iso.org
Website: www.iso.org

Published in Switzerland

© ISO 2020 – All rights reserved

Documents
Document Sharing Hub

Full document details: BS ISO 20176:2020

Contents

Page

Foreword ... **v**

Introduction ... **vi**

1 Scope ... **1**

2 Normative references ... **1**

3 Terms and definitions ... **1**

4 Measurement procedure for the three-dimensional H-point machine ... **3**
4.1 General ... 3
4.2 Summary of installation procedure ... 4
4.2.1 Summary ... 4
4.2.2 Measured versus design values ... 4
4.3 Prepare vehicle and seat ... 4
4.3.1 Vehicle ... 4
4.3.2 Seat ... 5
4.4 Determine the H-point travel path (optional) ... 5
4.5 Adjust seat to design intent ... 6
4.5.1 Move seat to design intent position ... 6
4.5.2 Torso angle and cushion angle ... 6
4.5.3 Seat in front of test seat ... 7
4.6 Install HPM cushion and back pan assembly ... 8
4.6.1 Install the cushion pan ... 8
4.6.2 Install the back pan ... 8
4.6.3 Level the HPM ... 9
4.7 Load the HPM ... 9
4.7.1 Procedure ... 9
4.7.2 Summary table ... 9
4.7.3 Load the cushion pan ... 10
4.7.4 Load the back pan ... 10
4.8 Soak time ... 11
4.9 Record measurements — digitize HPM points ... 11
4.9.1 General ... 11
4.9.2 H-point ... 11
4.9.3 Torso angle and cushion angle ... 12
4.9.4 Lumbar support prominence ... 12
4.9.5 Summary of driver measurements ... 12

5 Optional measurements for driver seat ... **12**
5.1 Leg and shoe installations ... 12
5.1.1 General ... 12
5.1.2 Mark accelerator pedal centreline ... 13
5.1.3 Install the shoe fixture ... 13
5.1.4 Install the shoe tool ... 13
5.1.5 Install leg segments ... 14
5.2 Record measurements ... 15
5.2.1 General ... 15
5.2.2 Shoe plane angle ... 16
5.2.3 Ball of foot reference point ... 16
5.2.4 Accelerator heel point ... 16
5.2.5 Accelerator heel point to ball of foot reference point lateral offset ... 18
5.2.6 Knee angle and ankle angle ... 18
5.2.7 Thigh angle and hip angle ... 18

6 Optional measurements for the 2nd or succeeding row passenger seats ... **18**
6.1 Leg and shoe installation ... 18
6.1.1 General ... 18

AVA Documents
Document Sharing Hub

© ISO 2020 – All rights reserved

Full document details: BS ISO 20176:2020

6.1.2 Install the shoe tool ... 18
6.1.3 Install leg segments ... 20
6.2 Record measurements for rear passengers ... 22
6.2.1 Summary of measurements ... 22
6.2.2 Floor reference point ... 23
6.2.3 Floor plane angle ... 23
6.2.4 Knee clearance and legroom ... 23

7 Additional optional measurements ... 24
7.1 Effective headroom ... 24
7.1.1 When to install headroom fixture ... 24
7.1.2 Install the headroom fixture ... 24
7.1.3 Measure effective headroom ... 24

8 Remove the HPM ... 24

Annex A (normative) **Description of the three-dimensional H-point machine (HPM) ... 26**

Annex B (informative) **HPM specification and tolerances ... 39**

Annex C (informative) **HPM field checking procedures ... 46**

Annex D (informative) **H-point design (HPD) tool description ... 63**

Bibliography ... 67

© ISO 2020 – All rights reserved
Documents
Document Sharing Hub
Full document details: BS ISO 20176:2020

Foreword

ISO (the International Organization for Standardization) is a worldwide federation of national standards bodies (ISO member bodies). The work of preparing International Standards is normally carried out through ISO technical committees. Each member body interested in a subject for which a technical committee has been established has the right to be represented on that committee. International organizations, governmental and non-governmental, in liaison with ISO, also take part in the work. ISO collaborates closely with the International Electrotechnical Commission (IEC) on all matters of electrotechnical standardization.

The procedures used to develop this document and those intended for its further maintenance are described in the ISO/IEC Directives, Part 1. In particular, the different approval criteria needed for the different types of ISO documents should be noted. This document was drafted in accordance with the editorial rules of the ISO/IEC Directives, Part 2 (see www.iso.org/directives).

Attention is drawn to the possibility that some of the elements of this document may be the subject of patent rights. ISO shall not be held responsible for identifying any or all such patent rights. Details of any patent rights identified during the development of the document will be in the Introduction and/or on the ISO list of patent declarations received (see www.iso.org/patents).

Any trade name used in this document is information given for the convenience of users and does not constitute an endorsement.

For an explanation of the voluntary nature of standards, the meaning of ISO specific terms and expressions related to conformity assessment, as well as information about ISO's adherence to the World Trade Organization (WTO) principles in the Technical Barriers to Trade (TBT) see www.iso.org/iso/foreword.html.

This document was prepared by Technical Committee ISO/TC 22, *Road vehicles*, Subcommittee SC 39, *Ergonomics*.

This third edition cancels and replaces the second edition (ISO 20176:2011), of which it constitutes a minor revision. The changes compared to the previous edition are as follows:

— minor editorial changes;

— removal of reference to the cancellation and replacement of ISO 6549:1999.

Any feedback or questions on this document should be directed to the user's national standards body. A complete listing of these bodies can be found at www.iso.org/members.html.

© ISO 2020 – All rights reserved

Documents
Document Sharing Hub
Full document details: BS ISO 20176:2020

Introduction

The tools and procedures for H-point determination given in this document are based on SAE J4002.

H-point devices are used during vehicle design and development to establish interior reference points and dimensions for occupant packaging, and to validate the location of these key reference points and dimensions on physical properties during audits.

H-point devices are also used for the design and validation of seats. However, in these instances, the reference points and dimensions are defined relative to the seat structure or surface, rather than the vehicle's interior. The procedures for positioning the H-point devices in seats do not require the use of the shoe tool or leg segments.

For convenience and simplicity, many terms associated with H-point devices use human body parts in their name. However, they should not be construed as measures that indicate occupant accommodation, human capabilities, or comfort. H-point devices do not represent the size or posture of any category of occupant.

Key differences from ISO 6549

Compared to the H-point machine (HPM) specified in ISO 6549, the HPM specified in this document provides improved repeatability, greater ease of use, as well as additional features and measurement capabilities. All efforts were made to achieve these improvements while minimizing their impact on the location of reference points and measurements. Several of the changes are discussed below.

1) **Separate components**

For this HPM, the legs (upper and lower), shoe, cushion pan and back pan are all separate pieces. This greatly improves the ease of installation.

2) **“Legless” manikin**

The H-point location is defined without having to attach the legs. This is a major advantage. The procedure specified in this document is based on installing the HPM without legs. Use of legs is optional.

3) **Shoe tool**

Several improvements were made to the shoe tool and how it is positioned in the vehicle, including:

i) replacing the pedal reference point (PRP) with a new ball of foot reference point (BOFRP);

ii) specifying a new procedure for positioning the shoe on the pedal.

4) **Cushion angle**

The cushion angle is now measured independently of thigh angle, and at the same time the other measurements are made. With the ISO 6549 HPM, cushion angle was measured from the thigh line, and required a separate installation of the HPM.

5) **Lumbar support**

The articulation of the back pan assembly allows the HPM specified in this document to be better seated in contoured seats. It also provides a measurement of lumbar support prominence (LSP). This measurement provides an indication of the amount the seat back is contoured to provide support for the lumbar spine. The contour of the back pan assembly is most similar to the ISO 6549 H-point machine when the HPM is in a neutral posture (LSP equals zero).

© ISO 2020 – All rights reserved
Documents
Document Sharing Hub
Full document details: BS ISO 20176:2020

Changes from ISO 20176:2011

The procedures for auditing the seat are unchanged from the second edition.

In the second edition, the most significant change was that the ball of foot (BOF) of the shoe does not have to be on the pedal surface. The HPM shoe can contact the pedal at any point(s) on the bottom of the shoe. The term pedal reference point (PRP) was deleted (since the BOF may not be on the pedal) and replaced by a new term called the ball of foot reference point (BOFRP). The accelerator heel point (AHP) to BOF distance was changed from 200 mm to 203 mm to be consistent with ISO 6549, SAE J1100, and vehicle manufacturers around the world.

In addition, the following physical modifications were made to the HPM. The flat part of the shoe bottom was extended from 200 mm to 203 mm. A new scale was added to the top of the shoe to aid in determining the pedal contact point (PCP). A new H-point divot was added to allow coordinate measuring machine (CMM) point taking from above. The knee angle scale was recessed to improve its durability and reoriented to improve its readability. Several figures were revised to illustrate these changes.

Finally, the terms pedal plane and pedal plane angle (PPA) were replaced by shoe plane and shoe plane angle (SPA). These new terms more accurately convey the meaning. SPA is a side view angle that is provided by the vehicle manufacturer.

© ISO 2020 – All rights reserved

Documents
Document Sharing Hub
Full document details: BS ISO 20176:2020

Documents
Document Sharing Hub

Road vehicles — H-point machine (HPM-II) — Specifications and procedure for H-point determination

1 Scope

This document provides the specifications and procedures for using the H-point machine (HPM)[1)] to audit vehicle seating positions. The HPM is a physical tool used to establish key reference points and measurements in a vehicle. The H-point design tool (HPD) is a simplified computer-aided design (CAD)[2)] version of the HPM, which can be used in conjunction with the HPM to take the optional measurements specified in this document, or used independently during product design.

These H-point devices provide a method for reliable layout and measurement of occupant seating compartments or seats. This document specifies the procedures for installing the H-point machine (HPM) and using the HPM to audit (verify) key reference points and measurements in a vehicle.

The devices are intended for application at designated seating positions. They are not to be construed as tools that measure or indicate occupant capabilities or comfort. They are not intended for use in defining or assessing temporary seating, such as folding jump seats.

2 Normative references

The following documents are referred to in the text in such a way that some or all of their content constitutes requirements of this document. For dated references, only the edition cited applies. For undated references, the latest edition of the referenced document (including any amendments) applies.

ISO 4130, *Road vehicles — Three-dimensional reference system and fiducial marks — Definitions*

SAE J1100, *Motor vehicle dimensions*

SAE J4002, *H-point machine (HPM-II) specifications and procedure for H-point determination — Auditing vehicle seats*

3 Terms and definitions

For the purposes of this document, the terms and definitions given in SAE J1100 and the following apply.

ISO and IEC maintain terminological databases for use in standardization at the following addresses:

— ISO Online browsing platform: available at https://www.iso.org/obp

— IEC Electropedia: available at http://www.electropedia.org/

3.1
H-point
point at the pivot centre of the back pan and cushion pan assemblies, located on the lateral centreline of the H-point device

Note 1 to entry: The H-point device can be the H-point machine (HPM) or the H-point design tool (HPD).

1) All references to H-point machine or HPM in this document refer to the SAE J4002 H-point machine (HPM-II), unless otherwise noted.

2) CAD has come to encompass any software system or approach to automotive design and development, and is often used to refer to CAE (computer-assisted engineering) and CAM (computer-assisted manufacturing) software systems as well.

© ISO 2020 – All rights reserved

AVA Documents Document Sharing Hub
Full document details: BS ISO 20176:2020

Note 2 to entry: The H-point is also the intersection of the cushion line and the torso line. When an H-point device is properly positioned within a vehicle, either in CAD or in an actual physical property, the location of the H-point relative to the vehicle is used as a vehicle reference point. If the seat is moved, the location of the H-point within the vehicle is changed. Therefore, adjustable seats have more than one H-point location, while fixed seats have only one H-point location.

Note 3 to entry: H-points are often referred to as hip points or hip pivot points. They simulate, but do not precisely represent, the location of the human hip joint.

3.2
H-point travel path
all possible locations of the *H-point* (3.1) provided by the full range of seat adjustments (horizontal, vertical or tilt) for a given designated seating position

3.3
seating reference point
SgRP
R-point
manufacturer's intended location for a design *H-point* (3.1), which is specifically designated as R-point or SgRP, and which:

a) is the fundamental reference point used to establish occupant accommodation tools and dimensions;

b) simulates the position of the pivot centre of the human torso and thigh;

c) has coordinates established with respect to the designed vehicle structure;

d) establishes the rearmost normal design driving or riding H-point of each designated seating position, which accounts for all modes of adjustment, horizontal, vertical and tilt that are available for the seat, but does not include seat travel used for purposes other than normal driving and riding

Note 1 to entry: The SgRP is sometimes referred to as the design H-point.

3.4
accelerator heel point
AHP
point representing the heel of shoe location on the depressed floor covering, when the bottom of shoe is in contact with the undepressed accelerator pedal and the ankle angle is at 87°

Note 1 to entry: The lateral location (*y*-coordinate) is aligned with the *BOFRP* (3.5) unless shoe interference with side support structure causes an offset of the AHP from the BOFRP (see 5.1.4.2).

3.5
ball of foot reference point
BOFRP
point representing the ball of foot location on the shoe plane when the *H-point* (3.1) machine shoe is set to a specified *shoe plane angle* (3.8), the bottom of shoe is in contact with the undepressed accelerator pedal, the ball of foot is aligned with the lateral centreline of the undepressed accelerator pedal in rear view, and the heel of shoe is at the depressed floor covering

Note 1 to entry: The BOFRP and *AHP* (3.4) are at the same *y*-coordinate unless there is lateral shoe interference.

3.6
floor reference point
FRP
<rear passenger> point at the intersection of the heel of shoe and the depressed floor covering, with the bottom of shoe resting on the depressed floor covering

Note 1 to entry: FRP is determined within 127 mm to either side of centreline of occupant, with the shoe or lower leg segment moved forward to rest against the seat in front (contacting the underseat structure, lower portion of the seat back trim, etc.).

© ISO 2020 – All rights reserved
Documents
Document Sharing Hub
Full document details: BS ISO 20176:2020

3.7
lumbar support prominence
LSP
measure of the back-pan shape imposed on the HPM by the contour of the lower seatback

Note 1 to entry: See Table A.4.

3.8
shoe plane angle
SPA
α_{SP}
angle from horizontal to the bottom of the HPM shoe when the shoe is in contact with the undepressed accelerator pedal and the shoe heel is at the *AHP* (3.4)

Note 1 to entry: SPA is provided by the vehicle manufacturer or calculated from the manufacturer's published seat height H30-1 (see 5.1.4).

4 Measurement procedure for the three-dimensional H-point machine

4.1 General

A complete description of the three-dimensional H-point machine is given in Annex A (see Figure 1). Specifications and tolerances are given in Annex B. A field checking procedure for the HPM is given in Annex C.

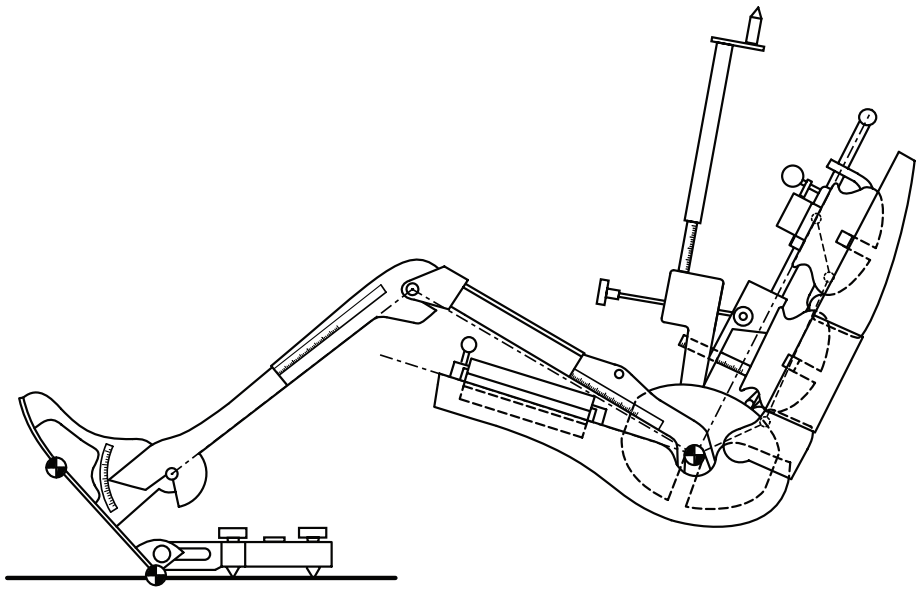

Figure 1 — Side view of HPM, including optional components

The HPM[3)] includes divot points that can be used by a coordinate measuring machine (CMM) and in CAD[4)] to fully define the location of the machine in the vehicle space (see A.2.3). Calibrated planar surfaces on the HPM facilitate field measurement of machine angles using an inclinometer. A scale readout indicates the lumbar support prominence (LSP) value. An ankle angle scale is provided to aid HPM installation in long-coupled passenger seating.

3) All references to H-point machine or HPM in this document refer to the SAE J4002 H-point machine (HPM-II), unless otherwise noted.

4) CAD has come to encompass any software system or approach to automotive design and development, and is often used to refer to CAE (computer-assisted engineering) and CAM (computer-assisted manufacturing) software systems as well.

© ISO 2020 – All rights reserved

AVA Documents Document Sharing Hub
Full document details: BS ISO 20176:2020

Several of the reference points established with an H-point device are required for the subsequent positioning of other design devices, such as head contours, eyellipses and reach curves. The most important reference points established by an H-point device are the H-point, the H-point travel path, the seating reference point (SgRP), the accelerator heel point (AHP), and the ball of foot reference point (BOFRP). These reference points are illustrated in Figure A.8.

4.2 Summary of installation procedure

4.2.1 Summary

See Table 1.

Table 1 — Summary of installation procedure

Driver position	Passenger positions: 2nd and 3rd row
Prepare the physical property. If possible, calibrate the CMM equipment to vehicle grid coordinates.	
Position seat to design intent location and attitude.	Position the test seat and (if the HPM legs are to be installed) the seat in front of the test seat to design intent location and attitude.
Install shoe fixture and shoe tool, if measuring leg and shoe dimensions. Record shoe-based measurements. See 5.1.	Install shoe tool, if measuring leg and shoe dimensions. Record shoe-based measurements. See 6.1.
Install and load the cushion pan and back pan. If measuring headroom, install headroom fixture before loading the pans. See 7.1. Determine H-point, torso angle, cushion angle and LSP. See 4.8.	
Attach thigh and lower leg segments, if measuring leg-based dimensions. See 5.1.	Attach thigh and lower leg segments, if measuring leg-based dimensions. See 6.1.
Determine optional measurements. See 5.2 and 7.1.	Determine optional measurements. See 6.2 and 7.1.

4.2.2 Measured versus design values

When verifying or auditing a particular designated vehicle seating position, measurements taken with the three-dimensional HPM are normally compared to the design values indicated by the vehicle manufacturer. If any measured value is sufficiently close to the manufacturer's design value, the vehicle or seat is considered to meet the manufacturer's design intent for that measurement. The vehicle manufacturer or a regulatory agency may provide specifications for the term “sufficiently close”. Two HPM measurements of particular interest are H-point (SgRP) and torso angle.

4.3 Prepare vehicle and seat

4.3.1 Vehicle

Dimensions shall be measured relative to the vehicle three-dimensional reference system by setting up the vehicle relative to the fiducial marks in accordance with ISO 4130 as specified by the manufacturer. The vehicle (or seating buck) shall be levelled prior to any HPM installation or measurement. Once the vehicle is levelled, care should be taken to not lean on it, rock it, or in some other way knock it off level.

If the accelerator pedal is needed for the measurements, the accelerator pedal shall be held in an undepressed position by some means. For example, use blocks or clamp the accelerator cable to prevent the pedal from moving. If the pedal rotates about a pivot, independent of throttle movement, do not restrict that motion. If the accelerator pedal has fore/aft adjustment, the pedal shall be positioned as specified by the manufacturer. If no specification is provided, the pedal shall be adjusted to its most forward position in the vehicle.

© ISO 2020 – All rights reserved
Documents
Document Sharing Hub
Full document details: BS ISO 20176:2020

4.3.2 Seat

The vehicle shall be preconditioned at the manufacturer's discretion, at a temperature of 19 °C to 26 °C to ensure that the seat material reaches room temperature. Room relative humidity should be within 50 % ± 5 %. If this relative humidity is not met, record both relative humidity and room temperature.

The following considerations are to help ensure that stable, reliable measurements are made across seat types. If the seat to be checked has never been sat upon, a 70 kg to 80 kg person or device shall be placed on the seat to flex the cushion and back. Prior to the installation of the HPM, seats should remain unloaded for 30 min at the manufacturer's request. This is to allow the seat and seat materials (e.g. foam) to recover from compression.

Muslin cloth should be placed over the seat prior to installing the HPM. The muslin cloth may be a single piece fitting across both seat cushion and seat back, or two pieces, one for the cushion and one for the seat back. This ensures a constant friction surface across seat fabrics. See B.11.

When using the HPM, interactions can occur between adjacent seating positions (i.e. having an HPM installed at the centre occupant position can change the results obtained for the outboard occupant position). Therefore, only one machine should be installed in a particular row of seats during each test.

4.4 Determine the H-point travel path (optional)

If verification of the H-point travel path is desired, the seat's travel path shall be digitized and then translated to the H-point travel path. First, adjust the seat cushion to the middle of the cushion angle adjustment range. Next, place one or more registration marks on the side of the seat. The registration mark(s) can be located anywhere along the side of the seat that can be easily accessed by the CMM equipment. Finally, digitize the location of the registration mark(s) with the seat in each of four positions: lowest most-rearward, highest most-rearward, highest most-forward, lowest most-forward. By connecting these four points, the seat's travel path can be seen more readily. See Figure 2 a) and b).

NOTE For seats without vertical adjustment, only two points are taken, most forward and most rearward, provided the seat track follows a linear path. If the seat track travel path is curved, additional points (between foremost and rearmost) are taken.

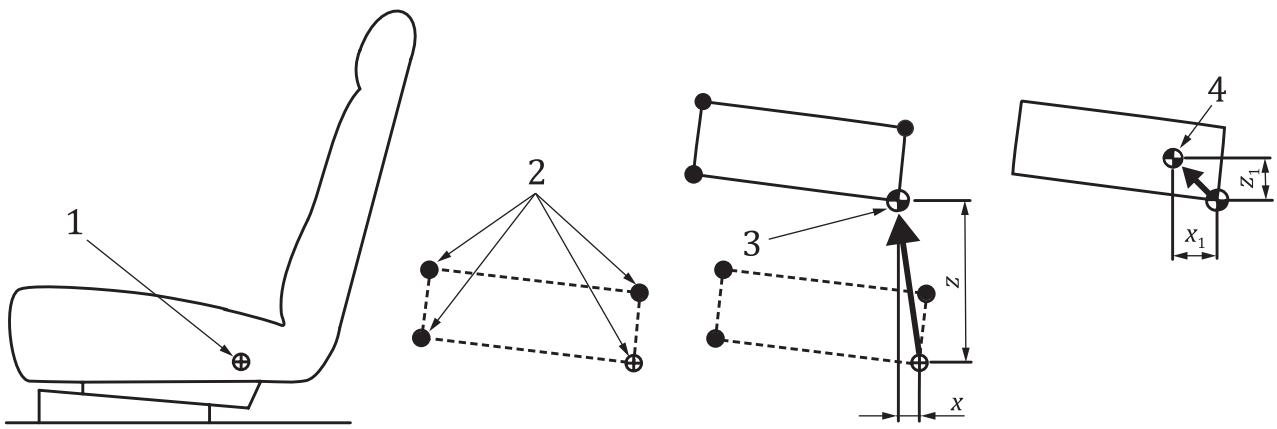

a) Place registration mark on seat with seat at lowest most-rearward position | **b) Move seat through its fore/aft and up/down travel path** | **c) Translate seat travel path by (x,z) to get the H-point travel path** | **d) Move seat by (x_1,z_1) from lowest, most-rearward H-point to its SgRP location**

© ISO 2020 – All rights reserved

Documents
Document Sharing Hub
Full document details: BS ISO 20176:2020

Key

1 registration mark

2 registration mark at extremes of seat travel

3 lowest, most-rearward H-point

4 SgRP

Figure 2 — Locating seating reference point from the seat travel path

4.5 Adjust seat to design intent

4.5.1 Move seat to design intent position

All adjustable features of the seat shall be set to manufacturer's design intent attitude or position before installing the HPM.

For seats with an independent vertical adjustment or suspension, the vertical position shall be rigidly fixed in a position specified by the manufacturer.

The seat registration mark is helpful in positioning the seat at design intent relative to one of the seat's extreme locations (usually the rearmost, lowest position) determined in 4.4. Normally, the design intent position specified by the vehicle manufacturer is the SgRP. Figure 2 illustrates a typical way to translate seat travel to H-point travel and then to SgRP. After an adjustable seat is positioned at design intent, digitize the seat registration mark(s).

4.5.2 Torso angle and cushion angle

4.5.2.1 General

Seat torso and cushion angle adjustment procedures for auditing differ depending on whether or not variance in seat build is of interest.

4.5.2.2 Standard audit: include seat and vehicle build variability

The seat shall be adjusted to the design intent torso angle and cushion angle before installing the HPM. The vehicle manufacturer (or seat supplier) shall provide information regarding the location and attitude of the discernible seat structure (e.g. the seat frame), other hard points (e.g. seat controls, pivot points, head restraint rods), or the amount of adjustment required to attain the desired seat attitude.

4.5.2.3 Optional audit: exclude seat build variability

If the purpose of the audit is to evaluate the build of the vehicle package without accounting for seat build variability, then the HPM needs to be installed in order to set the seat to the design intent values of torso and cushion angles.

As the HPM is loaded with weights, torso angle tends to increase and cushion angle tends to decrease. If torso and cushion angles are adjustable, the initial (unloaded) angles usually differ by about 1° to 2° from the desired final angles after loading. For example, set the seat back initially to an angle of approximately 20° to achieve a final torso angle of 22°.

Monitor and readjust torso and cushion angles as necessary during installation of HPM weights in order to achieve the design intent angles as the final reading (see Table 2). Then, remove the HPM, wait 30 min to allow the seat materials to recover, and install the HPM a second time for the audit. For this audit, the HPM installation normally includes the leg and shoe tool, as well as the headroom fixture.

NOTE The seat can also be audited independently of the vehicle.

© ISO 2020 – All rights reserved
Documents
Document Sharing Hub
Full document details: BS ISO 20176:2020

Table 2 — Optional audit: Adjusting torso and cushion angles during HPM loading

Angle	Driver position	Passenger positions: 2nd or 3rd row
Torso angle A40	Initially set the torso angle to approximately 2° more vertical than the design intent. Monitor and adjust if needed during HPM loading to achieve design intent.	If the seat recliner is adjustable, initially set the torso angle to approximately 2° more vertical than the design intent. Monitor and adjust if needed during HPM loading to achieve design intent.
Cushion angle A27	If the seat cushion is adjustable, initially set the cushion angle to be slightly greater than design intent value. Monitor and readjust as necessary during HPM installation to achieve the design intent cushion angle as the final reading.	

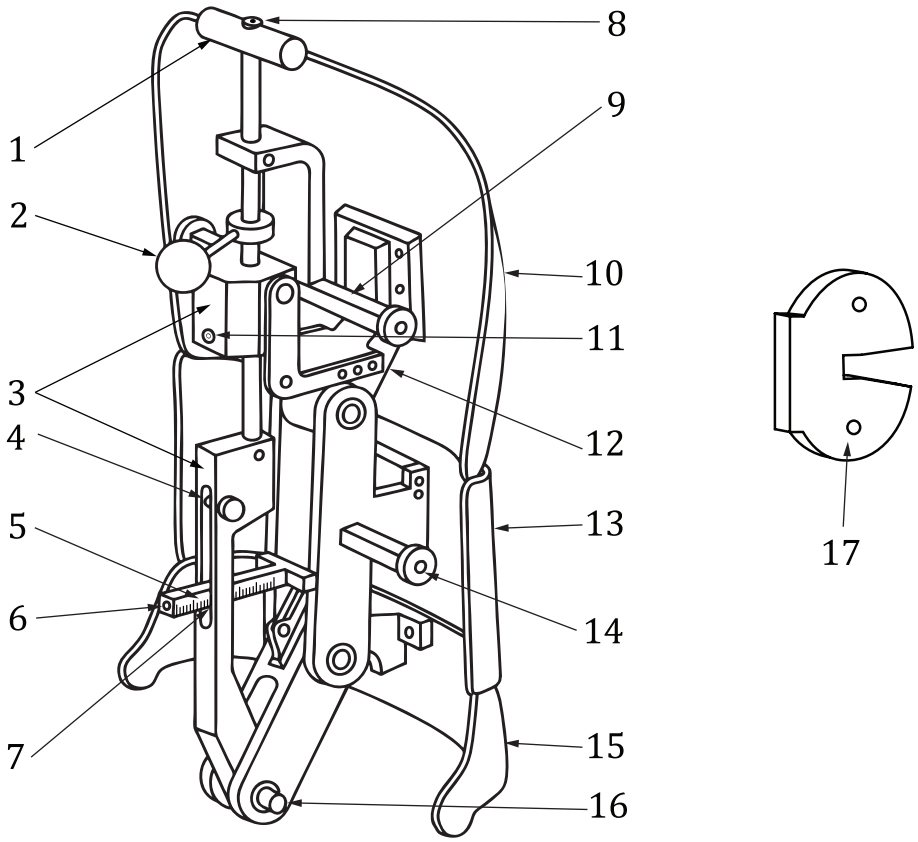

Key

1 handle
2 torso articulation locking lever
3 inclinometer lands for torso angle
4 head room fixture tumbler
5 lumbar support prominence (LSP) scale
6 load application point
7 indicator to read LSP value
8 B1 divot
9 upper weight rack (left side)
10 thoracic segment
11 B2 divot
12 articulation mechanism
13 lumbar segment
14 lower weight rack (left side)
15 pelvic segment
16 H-point pivot shaft
17 one of twelve back weights

Figure 3 — Back pan

4.5.3 Seat in front of test seat

If leg positions, legroom, footroom and knee clearance are to be measured, the seat in front of the test seat should be positioned to its SgRP and design intent torso angle.

© ISO 2020 – All rights reserved

Documents
Document Sharing Hub
Full document details: BS ISO 20176:2020

4.6 Install HPM cushion and back pan assembly

4.6.1 Install the cushion pan

Place the cushion pan (see Figure 4) on the seat with the back of the pan resting lightly against the seat back. Visually centre the cushion pan laterally in the seat.

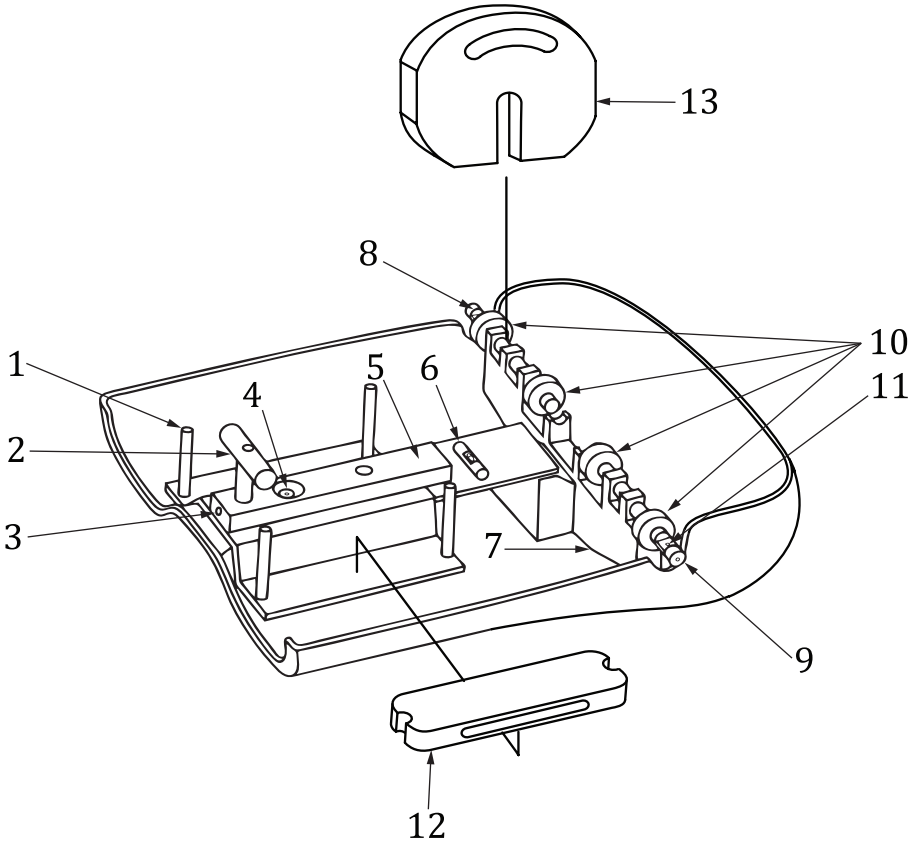

Key

1 thigh weight locating pins (4)
2 handle
3 load application point
4 C1 divot
5 inclinometer land for cushion angle
6 lateral level
7 H-point saddle
8 H1R divot
9 H1L divot
10 locking bushings for attaching back pan (2), thigh segment (2) and headroom fixture
11 H2L divot
12 thigh weight (6)
13 pelvic weight (6)

Figure 4 — Cushion pan

4.6.2 Install the back pan

To protect the shells of the cushion and back pans, the back pan should be locked in a slouched position before installing it. Articulate the back pan into a slouched position (LSP < 0) and lock.

© ISO 2020 – All rights reserved
Documents
Document Sharing Hub
Full document details: BS ISO 20176:2020

Place the H-point pivot shaft, located at the base of the back pan, on the H-point saddle of the cushion pan (see Figures 3 and 4). The upper portions of the back pan should not contact the seat back. Secure by sliding the brass locking bushings inwards over the H-point shaft.

Unlock the torso articulation. Put one hand firmly on the cushion pan T-handle to maintain the position of the cushion pan. Put the other hand on the back pan T-handle and gently rotate the back pan assembly against the seat back to allow the back pan assembly to conform to the seat back contour. Ensure that the top and bottom corners at each side of the lumbar segment remain outside the thoracic and pelvic segments. Also ensure that the muslin cloth is not caught between the back segments (see Figure 5).

The cushion and back pan can be connected and installed as a single unit if preferred. Follow the same steps as above, centring the cushion pan lightly against the seat back with the back pan rotated forward and locked in the slouched position.

If measuring headroom, install the headroom fixture now (see 7.1).

4.6.3 Level the HPM

Referring to the bubble level on the cushion pan, dither and adjust the HPM so it is level laterally on the seat. Make sure the HPM is in firm contact with the seat back.

4.7 Load the HPM

4.7.1 Procedure

Installing weights on the HPM is referred to as 'loading'. The HPM shall be loaded with the torso articulation mechanism unlocked. Weights shall be installed from the H-point outward and from the H-point upward to prevent the HPM from toppling out of the seat. Prior to each round of weights being loaded, an 89 N force shall be applied twice by 'punching' the appropriate load application site with the spring-loaded probe. The operator shall immediately release any applied force once the punch probe reaches its spring loading. This procedure ensures the HPM remains fully nested into the seat during the loading.

4.7.2 Summary table

The HPM shall be checked for level during the loading process. The sequence of actions for loading the HPM, summarized in Table 3, shall be followed.

Table 3 — Loading the HPM

Round	Apply 89 N	Load two weights	Then load two weights	Check for:
1	Punch twice (cushion)	2 Pelvic — innermost positions	2 Thigh	Level
2	Punch twice (cushion)	2 Pelvic — next innermost positions	2 Thigh	Level
3	Punch twice (cushion)	2 Bevelled pelvic — outermost positions	2 Thigh	Level
4	Punch twice (back)	2 Lower rack — innermost positions	2 Upper rack — innermost positions	Level
5	Punch twice (back)	2 Lower rack — next innermost position	2 Upper rack — next innermost positions	Level
6	Punch twice (back)	2 Lower rack — outermost positions	2 Upper rack — outermost positions	Level
7	Lock torso articulation			

© ISO 2020 – All rights reserved

Documents
Document Sharing Hub
Full document details: BS ISO 20176:2020

4.7.3 Load the cushion pan

There are two types of weights for loading the cushion pan: pelvic weights, which are positioned in slots along the H-point axis, and thigh weights that are held in place by the pins in the thigh area.

Punch the HPM twice at the cushion pan load application point (see Figure 5). Install two pelvic weights in the innermost pelvic weight slots (one to either side of the H-point). Install two thigh weights (one to either side). Check for level.

Repeat these steps (punch twice, load two pelvic weights, load two thigh weights, and level) two more times to complete the loading of the cushion pan.

4.7.4 Load the back pan

There are two areas for loading weights on the back-pan assembly, the lower and upper racks. However, the same type of weight is used in both areas.

When auditing the vehicle, but not the seat build, adjust the seat cushion or seat back recliner if necessary during the loading to obtain a final cushion and torso angle that equals design intent (see 4.5.2.3). The adjustments should be made after checking the cushion or back pan for level in each round shown in Table 3.

Punch the HPM twice at the back-pan load application point (see Figure 5). Install two weights on the lower racks–one on either side of centreline. Push the weights toward the centreline as far as possible. Install two weights on the upper racks, one on either side of centreline, and push towards the centreline. Check for level.

Repeat these steps (punch twice, load two weights on the lower rack, load two weights on the upper rack, and level) two more times.

After the back pan is fully loaded and level, lock the torso articulation mechanism.

© ISO 2020 – All rights reserved
Documents
Document Sharing Hub
Full document details: BS ISO 20176:2020

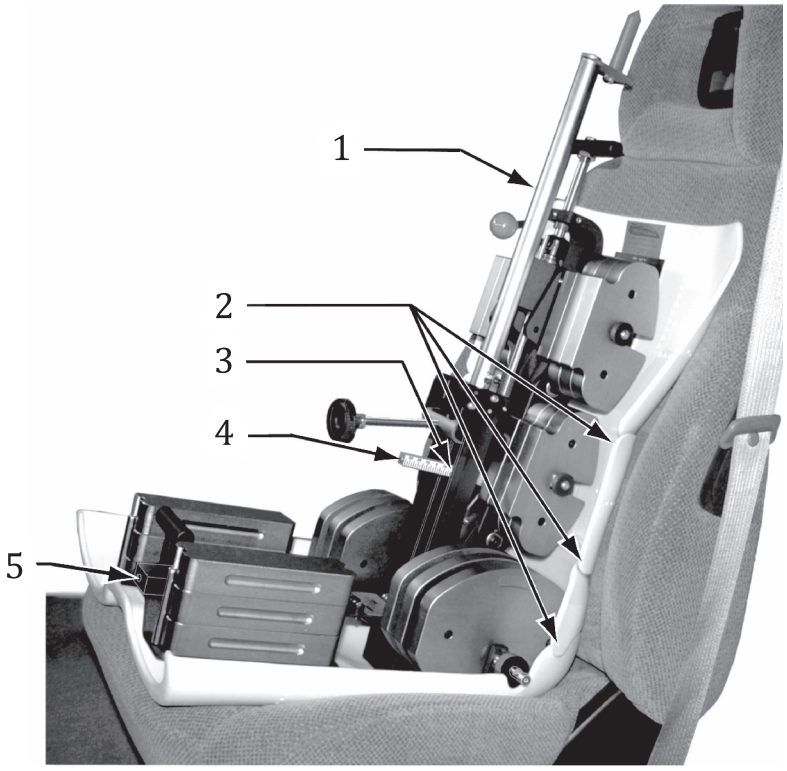

Key

1 headroom probe setting for measuring torso angle and LSP
2 correct overlap of back pan segments
3 LSP indication
4 back pan load application point
5 cushion pan load application point

Figure 5 — H-point machine installed in a seat

4.8 Soak time

After installation, the HPM can continue to "settle" into a seat, depending on the type of seat being used. Therefore, the installer should wait 5 min after completing the HPM installation before recording data.

4.9 Record measurements — digitize HPM points

4.9.1 General

The HPM allows the H-point location, torso angle, LSP and cushion angle to be defined without having to attach the legs.

4.9.2 H-point

The H-point is located at the lateral centreline of the HPM. Therefore, this point cannot be directly digitized. Rather, divot points H1L and H1R are provided for digitizing at either end of the H-point rods (see Figure 4). If either H1L or H1R is not readily accessible by the CMM, use divots H2L and H2R. Both H1L and H1R or H2L and H2R should be digitized. The H-point is midway between these two points. Divot points B1, B2 and C1 may be used to establish the HPM centreplane in CAD to check the *y*-coordinate of the H-point.

© ISO 2020 – All rights reserved

Documents
Document Sharing Hub
Full document details: BS ISO 20176:2020

The digitized H-point, which represents the measured SgRP or R-point, shall be compared to the design SgRP or R-point to assess the accuracy of the seat build.

4.9.3 Torso angle and cushion angle

Record the following measurements using an inclinometer and the appropriate land: torso angle, using the headroom fixture land or back assembly land; cushion angle, using the cushion pan inclinometer land. As an alternative, the torso angle can be calculated from divot points H1L, H1R and B1, and the cushion angle from divot points H1L, H1R and C1. H2L and H2R can be used in lieu of the H1 divots.

4.9.4 Lumbar support prominence

The HPM provides a scale on the back pan assembly for a direct read-out of the LSP (Figure 5).

4.9.5 Summary of driver measurements

Table 4 shows the standard and optional measurements for the driver seat position.

Table 4 — Driver measurements

SAE J1100 Code	Dimension
L31, W20, H70	SgRP *x*-, *y*-, and *z*-coordinates
A40	Torso angle
A27	Cushion angle
L81	LSP
Optional measurements (leg and shoe attached)	
L8, W8, H8	AHP *x*-, *y*-, and *z*-coordinates
L1, W1, H1	BOFRP *x*-, *y*-, and *z*-coordinates
PW86	BOFRP to AHP lateral offset
A47	SPA
A57	Thigh angle
A42	Hip angle
A44	Knee angle
A46	Ankle angle
H30	Seat height
H61	Effective headroom
L33	Maximum legroom
L34	Effective legroom

5 Optional measurements for driver seat

5.1 Leg and shoe installations

5.1.1 General

If the user plans to measure shoe and leg dimensions, the shoe fixture and shoe tool should be installed before the HPM cushion and back pans are installed (see Table 1). The shoe tool is used to establish the BOFRP and the AHP for the driver.

© ISO 2020 – All rights reserved
Documents
Document Sharing Hub
Full document details: BS ISO 20176:2020

5.1.2 Mark accelerator pedal centreline

Before installing the shoe tool in the driver compartment, place masking tape down the longitudinal centre of the accelerator pedal and draw a line along the accelerator centreline.

5.1.3 Install the shoe fixture

The shoe fixture is used to hold the shoe level and in place on the pedal (Figure A.4). Position the forward edge of the shoe fixture approximately 100 mm to 150 mm rearward of the accelerator pedal such that the fork that is to hold the shoe tool is in line with the accelerator centreline. The fixture shall be square to the grid and level. Adjust the screws on the shoe fixture until it is level.

5.1.4 Install the shoe tool

5.1.4.1 Procedure

Place the shoe in the fixture, set the shoe plane angle (SPA) at the manufacturer specified angle, tighten the shoe locking screw to hold the shoe in place and slide the shoe forward. The shoe shall be positioned with the heel on the depressed floor covering, the bottom of shoe contacting the pedal face and the BOF aligned with the pedal centreline. For flat, free-pivoting pedal pads, the bottom of the shoe should be flush with the face of the pedal. When there is a single point of contact, that point is the pedal contact point (PCP). Where there is continuous contact, e.g. with a suspended, flat pivoting pedal, there is not a specific PCP. See Figure 8.

If the manufacturer does not specify the SPA, calculate it from Formula (1) as follows:

$$\alpha_{SP} = \left(2\ 522 \times 10^{-7} \times h_z^3\right) - \left(3\ 961 \times 10^{-4} \times h_z^2\right) + \left(4\ 644 \times 10^{-2} \times h_z\right) + 73\ 374 \quad (1)$$

where

α_{SP} is the SPA, expressed in degrees from the horizontal;

h_z is the seat height, in millimetres (dimension code H30 in SAE J1100).

Check to make sure the shoe tool is square to the grid. Adjust the fixture and shoe if necessary.

The SPA can be measured directly by placing the inclinometer on the rearward-facing surface of the shoe. Alternatively the SPA, α_{SP}, can be calculated from the z-coordinates of divot points S3 and S2 as follows.

$$\alpha_{SP} = \arcsin\left(\frac{z_{S3} - z_{S2}}{94}\right) \quad (2)$$

where

z_{S3} is the z-coordinate of the S3 divot point, in millimetres;

z_{S2} is the z-coordinate of the S2 divot point, in millimetres.

5.1.4.2 Interference

Occasionally, some aspect of the vehicle's structure, e.g. the tunnel, rocker or centre console, prevents the positioning of the shoe tool and fixture as specified in 5.1.4. If the interference prevents the shoe tool from being properly positioned at the accelerator centreline, the shoe and fixture shall be shifted laterally until the interference is cleared. The amount of the lateral offset, PW86, should be recorded. The BOFRP is defined at the centreline of the accelerator pedal, even though the shoe BOF is not at the centreline. The AHP is defined at the location of the heel of shoe (HOS) after the shoe tool is moved to clear the interference (see Figure 6).

© ISO 2020 – All rights reserved

AVA Documents Document Sharing Hub
Full document details: BS ISO 20176:2020

In some cases the shoe tool may fit properly, but the shoe fixture cannot. The tool and fixture still need to be moved to clear the interference, but the AHP location is defined as if the shoe was aligned at the pedal centreline. In other words, the AHP coordinates are defined as if the shoe had remained positioned on the pedal centreline with no interference. This translation is most easily done in CAD.

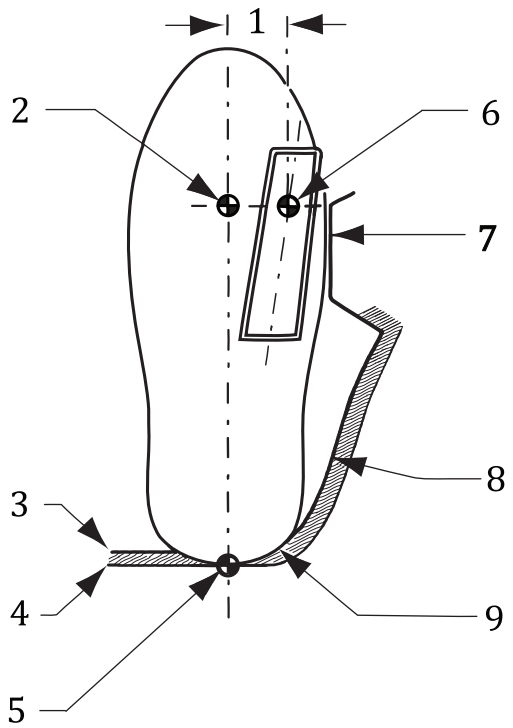

Key

1 PW86 (lateral offset dimension code from SAE J1100)
2 BOF
3 undepressed floor covering
4 depressed floor covering
5 AHP
6 BOFRP
7 interference at side of shoe
8 edge of tunnel or center console
9 interference at side of heel

Figure 6 — AHP to BOFRP lateral offset

5.1.5 Install leg segments

When taking the shoe and leg measurements in 5.2 and 6.2 for the purpose of reporting these dimensions to outside organizations, set the leg segments at the SgRP leg lengths, i.e. pin the thigh length to 456 mm and the lower leg to 459 mm. Manufacturers may use non-SgRP leg lengths for other purposes.

Install the thigh segment by placing the forks on the H-point rods. Slide the locking bushings inward and rotate until the pins lock into place (see Figures 4 and 7). Install the lower leg at the ankle pivot without moving the shoe. Join the thigh and lower leg segments, raising the thigh segment if necessary. Use the bushing on the knee pivot rod to secure the lower leg in place.

The completed HPM installation, including optional components, is shown in Figure 7 for the driver seating position. Optional components include the HPM legs, shoe tool and shoe fixture, and the headroom probe.

© ISO 2020 – All rights reserved
Documents
Document Sharing Hub
Full document details: BS ISO 20176:2020