BS ISO 20774:2013

BSI Standards Publication

Cigarettes — Determination of carbon monoxide in sidestream smoke — Method using a routine analytical linear smoking machine equipped with a fishtail chimney

bsi.

...making excellence a habit.™

Document Sharing Hub

Full document details: BS ISO 20774:2013

National foreword

This British Standard is the UK implementation of ISO 20774:2013. It supersedes BS ISO 20774:2007 which is withdrawn.

The UK participation in its preparation was entrusted to Technical Committee AW/40, Tobacco and tobacco products.

A list of organizations represented on this committee can be obtained on request to its secretary.

This publication does not purport to include all the necessary provisions of a contract. Users are responsible for its correct application.

© The British Standards Institution 2013. Published by BSI Standards Limited 2013

ISBN 978 0 580 74581 2

ICS 65.160

Compliance with a British Standard cannot confer immunity from legal obligations.

This British Standard was published under the authority of the Standards Policy and Strategy Committee on 30 September 2013.

Amendments issued since publication

Date	Text affected

Documents
Document Sharing Hub

Full document details: BS ISO 20774:2013

INTERNATIONAL STANDARD

ISO 20774

Second edition
2013-09-01

Cigarettes — Determination of carbon monoxide in sidestream smoke — Method using a routine analytical linear smoking machine equipped with a fishtail chimney

Cigarettes — Détermination du monoxyde de carbone dans le courant secondaire de fumée — Méthode utilisant une machine à fumer analytique de routine linéaire équipée d'une cheminée individuelle en forme de queue de poisson

Reference number
ISO 20774:2013(E)

Documents
Document Sharing Hub

© ISO 2013

Full document details: BS ISO 20774:2013

COPYRIGHT PROTECTED DOCUMENT

© ISO 2013

All rights reserved. Unless otherwise specified, no part of this publication may be reproduced or utilized otherwise in any form or by any means, electronic or mechanical, including photocopying, or posting on the internet or an intranet, without prior written permission. Permission can be requested from either ISO at the address below or ISO's member body in the country of the requester.

ISO copyright office
Case postale 56 • CH-1211 Geneva 20
Tel. + 41 22 749 01 11
Fax + 41 22 749 09 47
E-mail copyright@iso.org
Web www.iso.org

Published in Switzerland

© ISO 2013 – All rights reserved

Documents
Document Sharing Hub

Full document details: BS ISO 20774:2013

Contents

Page

Foreword ... **iv**
Introduction ... **v**
1 Scope ... **1**
2 Normative references ... **1**
3 Terms and definitions ... **1**
4 Principle ... **2**
5 Apparatus ... **2**
6 Reagents ... **5**
6.1 Standard gas mixtures ... 5
7 Sampling and preparation of cigarettes ... **6**
7.1 General ... 6
7.2 Symbols ... 6
7.3 Preparation of the cigarettes for smoking ... 6
7.4 Selection of test portions of cigarettes ... 6
7.5 Marking the butt length ... 7
7.6 Conditioning ... 8
7.7 Preliminary tests before smoking ... 8
8 Preparation for the smoking run ... **8**
8.1 Smoking plan ... 8
8.2 Preparation of mainstream and sidestream smoke traps and cigarette holders ... 8
8.3 Setting up the smoking machine ... 9
8.4 Assembly of fishtail chimney and sidestream smoke trap ... 9
9 Procedure for smoking run and collection of sidestream smoke ... **10**
9.1 Preparation of fishtail chimney ... 10
9.2 Setting the fishtail chimney flow rate ... 10
9.3 Connection of sidestream smoke filter pad holders ... 10
9.4 Record the atmospheric conditions ... 10
9.5 Loading the cigarettes ... 10
9.6 Smoking the cigarettes ... 10
10 Determination of carbon monoxide ... **11**
10.1 General principles ... 11
10.2 Calculation of CO yields using an off-line (bag collection) system ... 11
10.3 Calculation of carbon monoxide on an on-line (continuous flow) data acquisition system ... 12
11 Summary of other test sample calculations ... **13**
12 Test report ... **14**
12.1 General ... 14
12.2 Characteristic data about the cigarette ... 14
12.3 Data about sampling ... 15
12.4 Description of test ... 15
12.5 Test results ... 15
13 Repeatability and reproducibility ... **16**
Annex A (informative) **Smoking plans** ... **17**
Annex B (informative) **Alternative procedure for CO calibration** ... **21**
Bibliography ... **22**

© ISO 2013 – All rights reserved

Documents
Document Sharing Hub
Full document details: BS ISO 20774:2013

Foreword

ISO (the International Organization for Standardization) is a worldwide federation of national standards bodies (ISO member bodies). The work of preparing International Standards is normally carried out through ISO technical committees. Each member body interested in a subject for which a technical committee has been established has the right to be represented on that committee. International organizations, governmental and non-governmental, in liaison with ISO, also take part in the work. ISO collaborates closely with the International Electrotechnical Commission (IEC) on all matters of electrotechnical standardization.

The procedures used to develop this document and those intended for its further maintenance are described in the ISO/IEC Directives, Part 1. In particular the different approval criteria needed for the different types of ISO documents should be noted. This document was drafted in accordance with the editorial rules of the ISO/IEC Directives, Part 2. www.iso.org/directives

Attention is drawn to the possibility that some of the elements of this document may be the subject of patent rights. ISO shall not be held responsible for identifying any or all such patent rights. Details of any patent rights identified during the development of the document will be in the Introduction and/or on the ISO list of patent declarations received. www.iso.org/patents

Any trade name used in this document is information given for the convenience of users and does not constitute an endorsement.

The committee responsible for this document is ISO/TC 126, *Tobacco and tobacco products*.

This second edition cancels and replaces the first edition (ISO 20774:2007) which has been editorially revised.

© ISO 2013 – All rights reserved
Documents
Document Sharing Hub
Full document details: BS ISO 20774:2013

Introduction

Cigarettes are manufactured to close tolerances using strict quality control procedures.

However, the main constituents involved in the manufacture are derived from natural products (such as tobacco and paper) and this results in a final product which is intrinsically variable. Further complexity arises as the cigarette is combusted during smoking to yield the cigarette smoke.

The quantitative measurement of carbon monoxide is therefore dependent on the arbitrary definition of the means used to generate and collect the smoke. In particular, the ambient conditions (e.g. temperature, humidity, air movement within the laboratory) under which the test pieces are conditioned and smoke is collected play a critical role in the accuracy of the measurement.

Sidestream smoke in this International Standard is understood to be the smoke that is evolved from the cigarette during the smoking run other than from the mouth end (which is called mainstream smoke).

NOTE Side stream smoke is distinguished from environmental tobacco smoke (ETS), which is a mixture of aged and diluted exhaled mainstream smoke and aged and diluted sidestream smoke, and for the assessment of which the present method does not apply.

From the time that scientists have attempted to determine carbon monoxide yields in sidestream smoke, many different methods have been adopted. However, experience has shown some procedures to be more reliable and more amenable to handling of large numbers of samples. With these factors in mind, during the 1999–2002 period, collaborative studies by a task force composed of CORESTA (www.coresta.org) members have shown that improvements in repeatability and reproducibility result when some restrictions are placed upon the wide variety of methods and practices described in existing methods.

This International Standard, produced after much collaborative experimentation by many laboratories in many countries, reflects the results of the optimization proposed and validated by the task force and provides one set of procedures that are the accepted reference procedures and for which repeatability and reproducibility of the determinations were assessed. Experience in the task force has shown how strict adherence to the detailed set up and conditions of the method, as well as the degree of proficiency of the operator, affect the precision of the results.

Further, it is preferable that the selected method be compatible with different modes of cigarette equilibration or puffing parameters for the smoking of the tested pieces. The standards defined by ISO for the determination of mainstream smoke yields were, however, followed to the largest possible extent, although the machines used by the different laboratories were all of a linear type.

This method is a machine method and it allows cigarettes to be smoked using a strictly controlled set of parameters. Thus it enables the sidestream smoke carbon monoxide yields from cigarettes, when smoked by this procedure, to be compared and ranked. In the course of its studies, the task force demonstrated the value of comparing the analytical processes and their stability by use of the CORESTA monitor test piece for determining sidestream smoke CO yields.

Since the determination of sidestream smoke CO yield is by nature more complex and delicate than its counterpart performed on mainstream smoke, it is highly recommended to include a monitor test piece in the smoking plans, as is done in mainstream smoke determinations. It is possible to use the CORESTA monitor or any other internally designed monitor test piece for this purpose. The use of an internationally recognized one is recommended.

© ISO 2013 – All rights reserved

Documents
Document Sharing Hub
Full document details: BS ISO 20774:2013

Documents
Document Sharing Hub

INTERNATIONAL STANDARD ISO 20774:2013(E)

Cigarettes — Determination of carbon monoxide in sidestream smoke — Method using a routine analytical linear smoking machine equipped with a fishtail chimney

WARNING — The use of this International Standard can involve hazardous materials, operations and equipment. This International Standard does not purport to address all the safety problems associated with its use. It is the responsibility of the user of this International Standard to establish appropriate safety and health practices and determine the applicability of regulatory limitations prior to use.

1 Scope

This International Standard is applicable to the determination of carbon monoxide present in the sidestream smoke from cigarettes. The described method is specified using the ISO 3308 smoking parameters (puff volume, duration and frequency) and butt length, but it is technically compatible with other smoking regimes.

NOTE The method may not be directly adaptable to other sidestream smoke analytes. Nevertheless the determination of carbon dioxide was part of the validation study of ISO 20774 carried out by CORESTA. According to the number of reporting laboratories no rigorous statistical analysis of sidestream carbon dioxide data was carried out. Therefore only indicative information about conditions for the determination of CO_2 is provided.

2 Normative references

The following documents, in whole or in part, are normatively referenced in this document and are indispensable for its application. For dated references, only the edition cited applies. For undated references, the latest edition of the referenced document (including any amendments) applies.

ISO 2971, *Cigarettes and filter rods — Determination of nominal diameter — Method using a non-contact optical measuring apparatus*

ISO 3308, *Routine analytical cigarette-smoking machine — Definitions and standard conditions*

ISO 3402, *Tobacco and tobacco products — Atmosphere for conditioning and testing*

ISO 4387, *Cigarettes — Determination of total and nicotine-free dry particulate matter using a routine analytical smoking machine*

ISO 6488, *Tobacco and tobacco products — Determination of water content — Karl Fischer method*

ISO 6565, *Tobacco and tobacco products — Draw resistance of cigarettes and pressure drop of filter rods — Standard conditions and measurement*

ISO 8454:2007, *Cigarettes — Determination of carbon monoxide in the vapour phase of cigarette smoke — NDIR method*

3 Terms and definitions

For the purposes of this document, the following terms and definitions apply.

3.1
sidestream smoke vapour phase
portion of the sidestream smoke which passes through a Cambridge filter pad under the conditions specified in the method

© ISO 2013 – All rights reserved

Documents
Document Sharing Hub
Full document details: BS ISO 20774:2013

3.2
smoking process
use of a smoking machine to smoke cigarettes from lighting to final puff

3.3
smoking run
specific smoking process to produce such sidestream smoke from a sample of cigarettes as is necessary for the determination of the smoke components

3.4
laboratory sample
sample intended for laboratory inspection or testing and which is representative of the gross sample or the sub-period sample

3.5
test sample
cigarettes for test taken at random from the laboratory sample and which are representative of each of the increments making up the laboratory sample

3.6
conditioning sample
cigarettes selected from the test sample for conditioning prior to tests for sidestream smoke CO yield

3.7
test portion
group of cigarettes prepared for a single determination and which is a random sample from the test sample or conditioning sample, as appropriate

3.8
monitor test piece
sample produced for a specific test purpose, validated to fulfil requirements within specified tolerances and intended to be used for laboratory purposes only and labelled to clearly indicate that it is not for human use

Note 1 to entry: A monitor test piece is a sample taken from a batch of cigarettes that show the greatest homogeneity with regard to their physical, chemical and smoke yield characteristics.

4 Principle

— Sampling of the test cigarettes.

— Conditioning of the test cigarettes.

— Smoking of the test cigarettes on a smoking machine in accordance with ISO 3308, with the exception of the specifications on air velocity control, and equipped with a fishtail chimney and a filter pad (glass fibre filter pad) for sidestream smoke collection from each channel.

— Collection of sidestream smoke vapour phase and determination of its CO content.

NOTE The determination of the CO content can be done either by an on-line measurement or by off-line measurement. In the latter method, the vapour phase, or a proportion of it, is first collected in a gas bag.

5 Apparatus

Usual laboratory apparatus and in particular the following items.

5.1 Fishtail chimney[1)], manufactured in glass, of design and dimensions shown in Figure 1.

1) Details of where to obtain fishtail chimneys are available from ISO/TC 126.

© ISO 2013 – All rights reserved
Documents
Document Sharing Hub
Full document details: BS ISO 20774:2013

Dimensions in millimetres

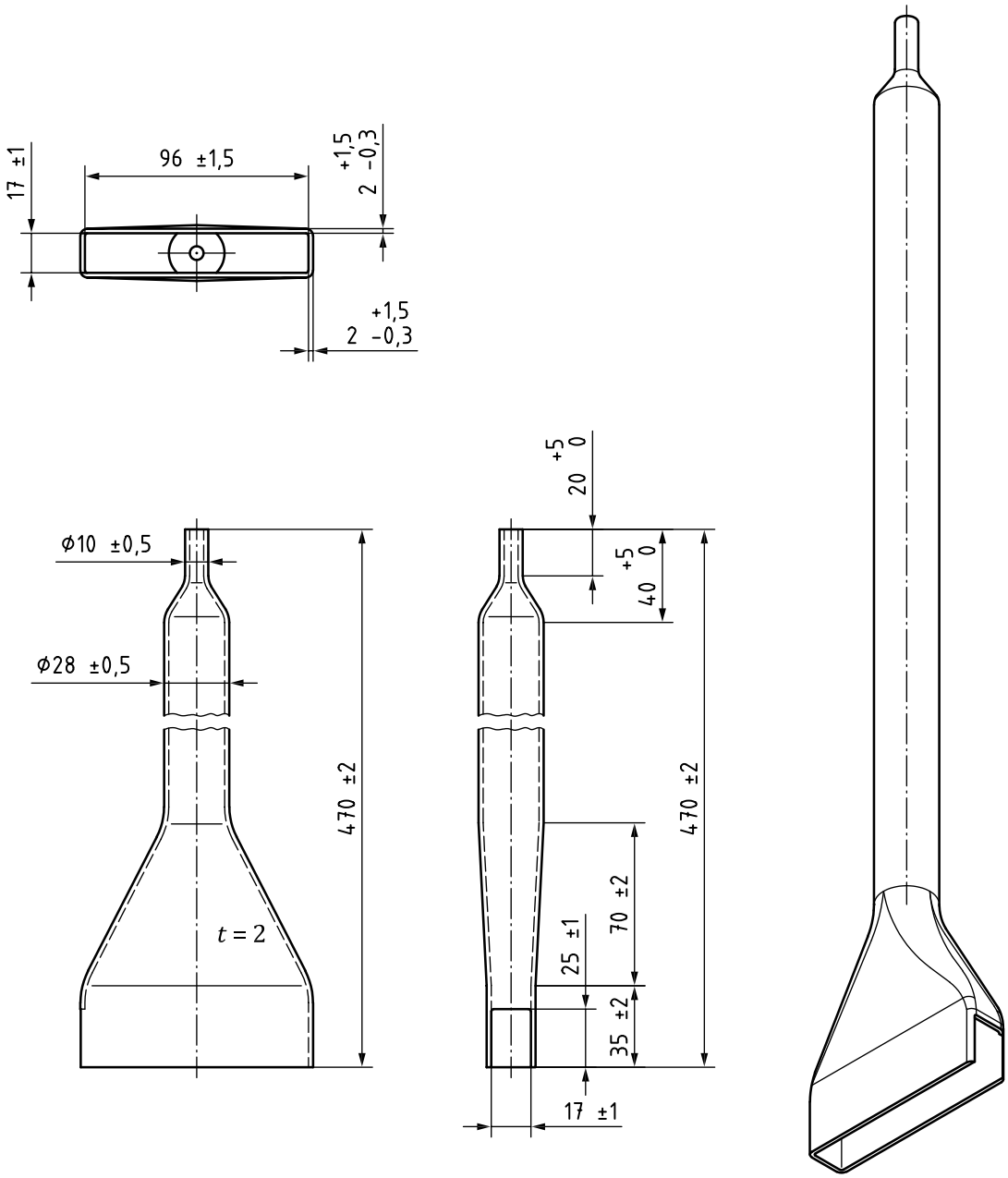

Figure 1 — Fishtail chimney dimensions

5.2 Routine analytical cigarette-smoking machine, modified to accept fishtail chimneys and complying with the requirements of ISO 3308 with the exception of the specifications on air velocity control. A plate shall be fixed underneath each channel, with a minimum length of 120 mm and a minimum width of 50 mm. This plate is positioned so as to cover the totality of the opening at the fishtail chimney bottom, as shown in Figure 2.

© ISO 2013 – All rights reserved

Documents
Document Sharing Hub
Full document details: BS ISO 20774:2013