BS ISO 20794-7:2020

BSI Standards Publication

Road vehicles — Clock extension peripheral interface (CXPI)

Part 7: Data link and physical layer conformance test plan

Documents
Document Sharing Hub

Full document details: BS ISO 20794-7:2020

National foreword

This British Standard is the UK implementation of ISO 20794-7:2020.

The UK participation in its preparation was entrusted to Technical Committee AUE/16, Data Communication (Road Vehicles).

A list of organizations represented on this committee can be obtained on request to its committee manager.

This publication does not purport to include all the necessary provisions of a contract. Users are responsible for its correct application.

© The British Standards Institution 2020
Published by BSI Standards Limited 2020

ISBN 978 0 580 98642 0

ICS 43.040.15

Compliance with a British Standard cannot confer immunity from legal obligations.

This British Standard was published under the authority of the Standards Policy and Strategy Committee on 30 November 2020.

Amendments/corrigenda issued since publication

Date	Text affected

Documents
Document Sharing Hub

Full document details: BS ISO 20794-7:2020

INTERNATIONAL STANDARD

ISO 20794-7

First edition
2020-10

Road vehicles — Clock extension peripheral interface (CXPI) —

Part 7: Data link and physical layer conformance test plan

Véhicules routiers — Interface périphérique d'extension d'horloge (CXPI) —

Partie 7: Plan de test de conformité des couches de liaison de données et physique

Reference number
ISO 20794-7:2020(E)

Documents
Document Sharing Hub

© ISO 2020

Full document details: BS ISO 20794-7:2020

COPYRIGHT PROTECTED DOCUMENT

© ISO 2020

All rights reserved. Unless otherwise specified, or required in the context of its implementation, no part of this publication may be reproduced or utilized otherwise in any form or by any means, electronic or mechanical, including photocopying, or posting on the internet or an intranet, without prior written permission. Permission can be requested from either ISO at the address below or ISO's member body in the country of the requester.

ISO copyright office
CP 401 • Ch. de Blandonnet 8
CH-1214 Vernier, Geneva
Phone: +41 22 749 01 11
Email: copyright@iso.org
Website: www.iso.org

Published in Switzerland

© ISO 2020 – All rights reserved

Documents
Document Sharing Hub

Full document details: BS ISO 20794-7:2020

Contents

Page

Foreword ... **vi**
Introduction ... **vii**
1 Scope ... **1**
2 Normative references ... **1**
3 Terms and definitions ... **1**
4 Symbols and abbreviated terms ... **1**
4.1 Symbols ... 1
4.2 Abbreviated terms ... 2
5 Conventions ... **3**
6 General test specification considerations ... **3**
6.1 General ... 3
6.2 Test conditions ... 4
6.3 IUT requirements ... 4
6.4 CTC definition ... 4
6.5 Test system set-up ... 5
6.6 Configuration of test system and IUT ... 6
6.6.1 General ... 6
6.6.2 IUT-specific set-up parameters ... 7
6.6.3 Default configurations ... 8
6.6.4 L_ErrDet1 configurations ... 8
6.6.5 L_ErrDet2 configurations ... 8
6.6.6 L_Arbit configurations ... 8
6.6.7 L_Unknown configurations ... 8
6.7 SUT initialisation ... 8
6.8 Additional test system set-up capabilities ... 9
6.8.1 CXPI network data generator ... 9
6.8.2 ***TXD*** data generator ... 11
6.8.3 $\boldsymbol{TX}_{\mathrm{PWM}}$ data generator ... 13
6.8.4 $\boldsymbol{RX}_{\mathrm{PWM}}$ data generator ... 14
6.8.5 Other requirements ... 16
7 Data link layer conformance test plan ... **16**
7.1 General ... 16
7.2 CTP – Timing parameters ... 16
7.2.1 2.CTC_1.1 – IBS length ... 16
7.2.2 2.CTC_1.2 – IFS length ... 17
7.2.3 2.CTC_1.3 – Frame reception starting condition 1 without the error bit ... 18
7.2.4 2.CTC_1.4 – Frame reception starting condition 1 with the error bit ... 18
7.2.5 2.CTC_1.5 – Frame reception starting condition 2 without the error bit ... 19
7.2.6 2.CTC_1.6 – Frame reception starting condition 2 with the error bit ... 20
7.2.7 2.CTC_1.7 – Frame reception starting condition 3 ... 20
7.2.8 2.CTC_1.8 – Maximum length of the frame ... 21
7.3 CTP – Frame transmission/reception ... 22
7.3.1 2.CTC_2.1 – Response to L_PID field ... 22
7.3.2 2.CTC_2.2 – L_PID field transmission ... 23
7.3.3 2.CTC_2.3 – L_PTYPE field transmission ... 23
7.3.4 2.CTC_2.4 – L_PTYPE field response function ... 24
7.3.5 2.CTC_2.5 – L_FI_DLC ≠ 1111_2 and frame data verification 1 ... 25
7.3.6 2.CTC_2.6 – L_FI_DLC ≠ 1111_2 and frame data verification 2 if DLC is 1101_2 or 1110_2 (Ftype = NormalCom) ... 26
7.3.7 2.CTC_2.7 – L_FI_DLC = 1111_2/L_FI_DLCext ≥ 0 and frame data verification ... 27
7.3.8 2.CTC_2.8 – Given CRC of frame with L_FI_DLC ≠ 1111_2 ... 28
7.3.9 2.CTC_2.9 – Given CRC of frame with L_FI_DLC = 1111_2/L_FI_DLCext ≥ 0 ... 29

© ISO 2020 – All rights reserved

AVA Documents
Document Sharing Hub
Full document details: BS ISO 20794-7:2020

7.3.10 2.CTC_2.10 – Frame transmission completion ... 30
7.3.11 2.CTC_2.11 – Frame reception completion ... 30
7.4 CTP – Network access ... 31
7.4.1 2.CTC_3.1 – Arbitration function 1 (arbitration by using carrier sense) ... 31
7.4.2 2.CTC_3.2 – Arbitration function 2 (IUT loses arbitration and transitions into receiving state) ... 32
7.5 CTP – Error detection ... 33
7.5.1 2.CTC_4.1 – Byte error ... 33
7.5.2 2.CTC_4.2 – CRC error ... 35
7.5.3 2.CTC_4.3 – Parity error of the L_PID field without the error bit ... 36
7.5.4 2.CTC_4.4 – Parity error of the L_PID field with the error bit ... 37
7.5.5 2.CTC_4.5 – Parity error of the L_PTYPE field without the error bit ... 37
7.5.6 2.CTC_4.6 – Parity error of the L_PTYPE field with the error bit ... 38
7.5.7 2.CTC_4.7 – Data length code error with L_FI_DLC ≠ 1111_2 ... 39
7.5.8 2.CTC_4.8 – Data length error with L_FI_DLC = 1111_2/L_FI_DLCext ≥ 0 ... 40
7.5.9 2.CTC_4.9 – Data length code error L_FI_DLC ≠ 1111_2 and if DLC is 1101_2 or 1110_2 (Ftype = DiagNodeCfg) ... 41
7.5.10 2.CTC_4.10 – Data length code error L_FI_DLC = 1111_2/L_FI_DLCext ≤ 12 (Ftype = DiagNodeCfg) ... 42
7.5.11 2.CTC_4.11 – Framing error in receiving node ... 43
7.5.12 2.CTC_4.12 – Framing error in transmitting node ... 44
7.5.13 2.CTC_4.13 – Ignore error (no support of L_FI_DLC = 1111_2) ... 44

8 Physical layer conformance test plan (PMA – PS separate type) ... 45
8.1 CTP – Operational conditions and calibration ... 45
8.1.1 Initial configuration ... 45
8.1.2 1.CTC_1.1 – Clock transmission 1 ... 46
8.1.3 1.CTC_1.2 – Clock transmission 2 ... 47
8.1.4 1.CTC_1.3 – Clock transmission 3 ... 49
8.1.5 1.CTC_1.4 – Detection of clock existence ... 51
8.1.6 1.CTC_1.5 – Arbitration function (stop transmission by arbitration) ... 52
8.1.7 1.CTC_1.6 – Operating voltage range ... 54
8.1.8 1.CTC_1.7 – Bit synchronisation ... 55
8.2 CTP – Wake-up pulse ... 57
8.2.1 General ... 57
8.2.2 1.CTC_2.1 – Wake-up pulse reception 1, IUT as master node ... 57
8.2.3 1.CTC_2.2 – Wake-up pulse reception 2, IUT as slave node ... 59
8.2.4 1.CTC_2.3 – Wake-up pulse transmission ... 61
8.3 CTP – Voltage and duty cycle thresholds ... 63
8.3.1 General ... 63
8.3.2 Voltage threshold test set-up ... 63
8.3.3 1.CTC_3.1 – Voltage threshold test 1 ... 63
8.3.4 1.CTC_3.2 – Voltage threshold ($\boldsymbol{V}_{\mathrm{Dom_TS}}$ up) test 2 ... 64
8.3.5 1.CTC_3.2 – Voltage threshold test 2 ... 66
8.3.6 1.CTC_3.3 – Duty cycle threshold test 1 ... 67
8.3.7 1.CTC_3.4 – Duty cycle threshold test 2 ... 68
8.4 CTP – Network state current characteristics ... 69
8.4.1 1.CTC_4.1 – Drive current test ... 69
8.4.2 1.CTC_4.2 – Input leakage test ... 71
8.4.3 1.CTC_4.3 – Reverse leakage current test ... 72
8.5 CTP – Physical signal slope control ... 73
8.5.1 1.CTC_5.1 – Duty cycle measurement 1 ... 73
8.5.2 1.CTC_5.2 – Duty cycle measurement 2 ... 75
8.5.3 1.CTC_5.3 – Duty cycle measurement 3 ... 77
8.5.4 1.CTC_5.4 – Propagation delay of the receiver test ... 78
8.5.5 1.CTC_5.5 – Propagation delay of the transmitter test ... 80
8.5.6 1.CTC_5.6 – Propagation delay of the transmitter test 2 ... 82
8.5.7 1.CTC_5.7 – Loop back time test ... 84
8.6 CTP – GND/$\boldsymbol{V}_{\mathrm{BAT}}$ shift test ... 85

© ISO 2020 – All rights reserved
AVA Documents Document Sharing Hub
Full document details: BS ISO 20794-7:2020

8.6.1 GND/V_{BAT} shift test set-up ... 85
8.6.2 1.CTC_6.1 – GND shift test ... 86
8.6.3 1.CTC_6.2 – V_{BAT} shift test ... 87
8.7 CTP – Loss of power supply ... 88
8.7.1 Loss of battery and Loss of GND test set-up ... 88
8.7.2 1.CTC_7.1 – Loss of battery test (V_{BAT}) ... 89
8.7.3 1.CTC_7.2 – Loss of GND test ... 90
8.8 CTP – Internal static capacity ... 91
8.8.1 Internal static capacity test set-up ... 91
8.8.2 1.CTC_8.1 Internal static capacity ... 92
8.9 CTP – Internal resistance measurement during operation ... 94
8.9.1 Internal resistor measurement test set-up ... 94
8.9.2 1.CTC_9.1– Internal resistor measurement 1 ... 95
8.9.3 1.CTC_9.2– Internal resistor measurement 2 ... 96

9 Physical layer conformance test plan (PS –PMA non-separate type) ... 97
9.1 CTP – Operational conditions and calibration ... 97
9.1.1 1.CTC_10.1 – Clock transmission ... 97
9.1.2 1.CTC_10.2 – Detection of clock existence ... 99
9.1.3 1.CTC_10.3 – Arbitration function (stop transmission by arbitration) ... 100
9.1.4 1.CTC_10.4 – Operating voltage range ... 101
9.2 CTP – Wake-up pulse ... 102
9.2.1 General ... 102
9.2.2 1.CTC_11.1 – Wake-up pulse reception, IUT as master node ... 102
9.2.3 1.CTC_11.2 – Wake-up by clock detection ... 103
9.2.4 1.CTC_11.3 – Wake-up pulse transmission ... 104
9.3 CTP – Voltage and duty cycle thresholds ... 105
9.3.1 General ... 105
9.3.2 1.CTC_12.1 – Voltage threshold test 1 ... 105
9.3.3 1.CTC_12.2 – Voltage threshold test 2 ... 107
9.3.4 1.CTC_12.3 – Duty cycle threshold test 1 ... 108
9.3.5 1.CTC_12.4 – Duty cycle threshold test 2 ... 111
9.4 CTP – Network state current characteristics ... 112
9.4.1 1.CTC_13.1 – Drive current test ... 112
9.4.2 1.CTC_13.2 – Input leakage test ... 114
9.4.3 1.CTC_13.3 – Reverse leakage current test ... 115
9.5 CTP – Physical signal slope control ... 116
9.5.1 1.CTC_14.1 – Duty cycle measurement 1 ... 116
9.5.2 1.CTC_14.2 – Duty cycle measurement 2 ... 118
9.6 CTP – GND/V_{BAT} shift test ... 120
9.6.1 GND/V_{BAT} shift test set-up ... 120
9.6.2 1.CTC_15.1 – GND shift test ... 121
9.6.3 1.CTC_15.2 – V_{BAT} shift test ... 122
9.7 CTP – Loss of power supply ... 123
9.7.1 General ... 123
9.7.2 Loss of battery (V_{BAT}) and GND test set-up ... 123
9.7.3 1.CTC_16.1 – Loss of battery test (V_{BAT}) ... 124
9.7.4 1.CTC_16.2 – Loss of GND test ... 125
9.8 CTP – Internal static capacity ... 126
9.8.1 Internal static capacity test set-up ... 126
9.8.2 1.CTC_17.1 Internal static capacity ... 127
9.9 CTP – Internal resistance measurement during operation ... 129
9.9.1 Internal resistor measurement test set-up ... 129
9.9.2 1.CTC_18.1– Internal resistor measurement 1 ... 130
9.9.3 1.CTC_18.2– Internal resistor measurement 2 ... 131

Bibliography ... 133

© ISO 2020 – All rights reserved

Documents
Document Sharing Hub
Full document details: BS ISO 20794-7:2020

Foreword

ISO (the International Organization for Standardization) is a worldwide federation of national standards bodies (ISO member bodies). The work of preparing International Standards is normally carried out through ISO technical committees. Each member body interested in a subject for which a technical committee has been established has the right to be represented on that committee. International organizations, governmental and non-governmental, in liaison with ISO, also take part in the work. ISO collaborates closely with the International Electrotechnical Commission (IEC) on all matters of electrotechnical standardization.

The procedures used to develop this document and those intended for its further maintenance are described in the ISO/IEC Directives, Part 1. In particular, the different approval criteria needed for the different types of ISO documents should be noted. This document was drafted in accordance with the editorial rules of the ISO/IEC Directives, Part 2 (see www.iso.org/directives).

Attention is drawn to the possibility that some of the elements of this document may be the subject of patent rights. ISO shall not be held responsible for identifying any or all such patent rights. Details of any patent rights identified during the development of the document will be in the Introduction and/or on the ISO list of patent declarations received (see www.iso.org/patents).

Any trade name used in this document is information given for the convenience of users and does not constitute an endorsement.

For an explanation of the voluntary nature of standards, the meaning of ISO specific terms and expressions related to conformity assessment, as well as information about ISO's adherence to the World Trade Organization (WTO) principles in the Technical Barriers to Trade (TBT), see www.iso.org/iso/foreword.html.

This document was prepared by Technical Committee ISO/TC 22, *Road vehicles*, Subcommittee SC 31, *Data communication*.

A list of all parts in the ISO 20794 series can be found on the ISO website.

Any feedback or questions on this document should be directed to the user's national standards body. A complete listing of these bodies can be found at www.iso.org/members.html.

© ISO 2020 – All rights reserved
Documents
Document Sharing Hub
Full document details: BS ISO 20794-7:2020

Introduction

ISO 20794 (all parts) specifies the application (partly), application layer, transport layer, network layer, data link layer, and physical layer requirements of an in-vehicle network called clock extension peripheral interface (CXPI).

CXPI is an automotive low-speed single wire network. It is an enabler for reducing vehicle weight and fuel consumption by reducing wire counts to simple devices like switches and sensors.

CXPI serves as and is designed for automotive control applications, for example door control group, light switch and HVAC (Heating Ventilation and Air Condition) systems.

The CXPI services, protocols and their key characteristics are specified in different parts according to the OSI layers.

— Application and application layer:

  — application measurement and control data communication to exchange information between applications in different nodes based on message communication;

  — wake-up and sleep functionality;

  — two kinds of communication methods can be selected at system design by each node:

    i) the event-triggered method, which supports application measurement- and control-based (event-driven) slave node communication; and

    ii) the polling method, which supports slave node communication based on a periodic master schedule;

  — performs error detection and reports the result to the application;

  — application error management.

— Transport layer and network layer:

  — transforms a message into a single packet;

  — adds protocol control information for diagnostic and node configuration into each packet;

  — adds packet identifier for diagnostic and node configuration into each packet;

  — performs error detection and reports the result to higher OSI layers.

— Data link layer and physical layer:

  — provides long and short data frames;

  — adds a frame identifier into the frame;

  — adds frame information into the frame;

  — adds a cyclic redundancy check into the frame;

  — performs byte-wise arbitration and reports the arbitration result to higher OSI layers;

  — performs frame type detection in reception function;

  — performs error detection and reports the result to higher OSI layers;

  — performs Carrier Sense Multiple Access (CSMA);

  — performs Collision Resolution (CR);

© ISO 2020 – All rights reserved

Documents
Document Sharing Hub
Full document details: BS ISO 20794-7:2020

— generates a clock, which is transmitted with each bit to synchronise the connected nodes on the CXPI network;

— supports bit rates up to 20 kbit/s.

To achieve this, it is based on the Open Systems Interconnection (OSI) Basic Reference Model specified in ISO/IEC 7498-1[1] and ISO/IEC 10731[2], which structures communication systems into seven layers.

Figure 1 illustrates an overview of communication frameworks beyond the scope of this document including related standards:

— vehicle normal communication framework, which is composed of ISO 20794-2, and ISO 20794-5[7];

— vehicle diagnostic communication framework, which is composed of ISO 14229-1[3], ISO 14229-2[4], and ISO 14229-8[5];

— presentation layer standards, e.g. vehicle manufacturer specific or ISO 22901-1 ODX[9];

— lower OSI layers framework, which is composed of ISO 20794-3[6], ISO 20794-4, ISO 20794-5, ISO 20794-6[8] and this document.

ISO 20794 (all parts) and ISO 14229-8[5] are based on the conventions specified in the OSI Service Conventions (ISO/IEC 10731[2]) as they apply for all layers and the diagnostic services.

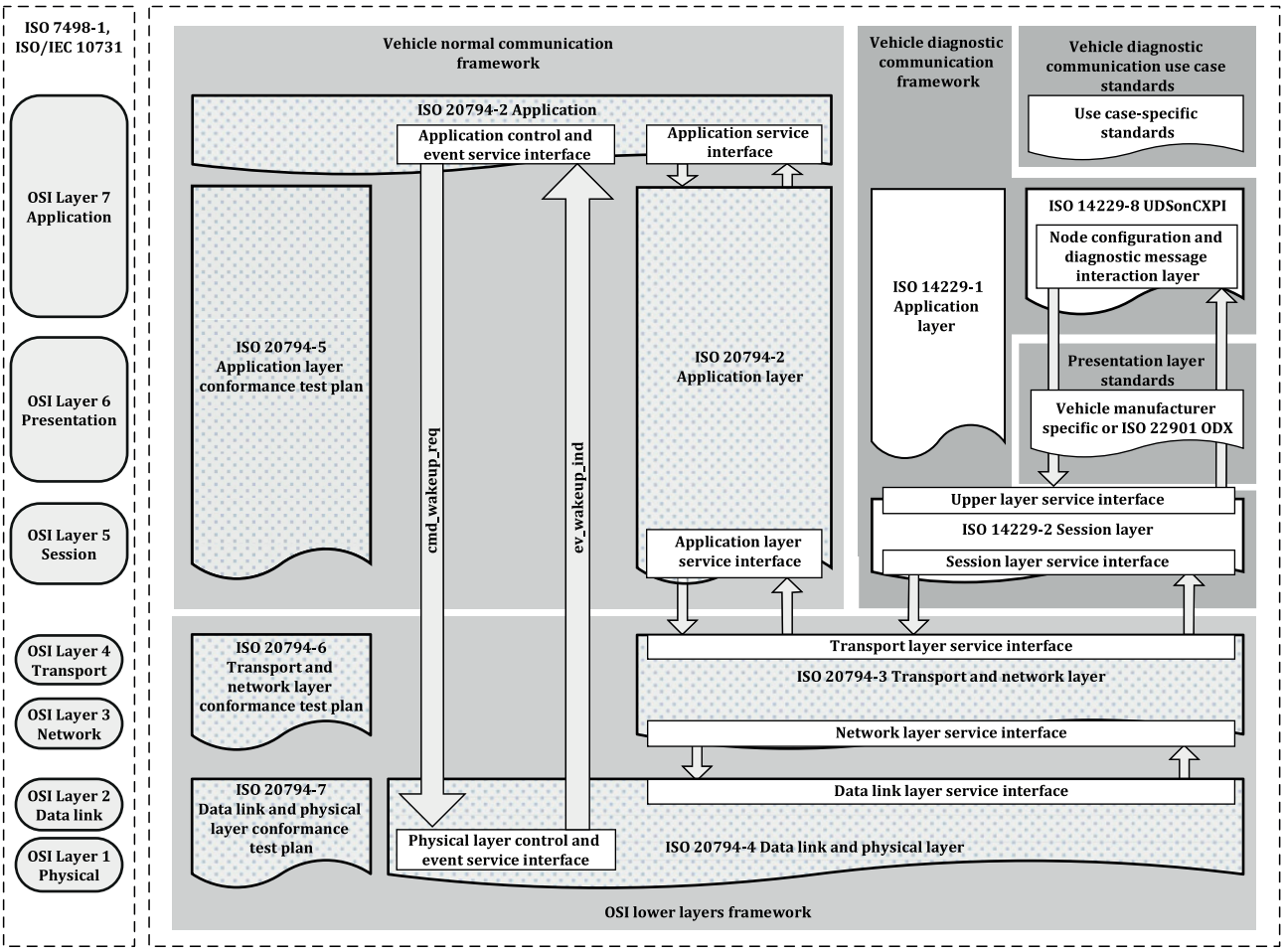

Figure 1 — ISO 20794 documents reference according to OSI model

© ISO 2020 – All rights reserved
Documents
Document Sharing Hub
Full document details: BS ISO 20794-7:2020

Road vehicles — Clock extension peripheral interface (CXPI) —

Part 7: Data link and physical layer conformance test plan

1 Scope

This document specifies the conformance test plans for the CXPI data link layer and the CXPI physical layer. It also specifies the conformance test plan for error detection.

Additionally, this document describes the concept of conformance test plan operation.

2 Normative references

The following documents are referred to in the text in such a way that some or all of their content constitutes requirements of this document. For dated references, only the edition cited applies. For undated references, the latest edition of the referenced document (including any amendments) applies.

ISO/IEC 7498-1:1994, *Information processing systems — Open systems interconnection — Basic reference model*

ISO 20794-2:2020, *Road vehicles — Clock extension peripheral interface (CXPI) — Part 2: Application layer*

ISO 20794-4:2020, *Road vehicles — Clock extension peripheral interface (CXPI) — Part 4: Data link layer and physical layer*

3 Terms and definitions

For the purposes of this document, the terms and definitions given in ISO 20794-2, ISO 20794-4 and ISO/IEC 7498-1 apply.

ISO and IEC maintain terminological databases for use in standardization at the following addresses:

— ISO Online browsing platform: available at https://www.iso.org/obp

— IEC Electropedia: available at http://www.electropedia.org/

4 Symbols and abbreviated terms

4.1 Symbols

---	empty cell/undefined
C_{BUS}	total bus capacitance
C_{PG}	capacity of pulse generator/data generator
C_{SLAVE}	capacity of slave node
kbit/s	kilobit per second

© ISO 2020 – All rights reserved

Documents Document Sharing Hub
Full document details: BS ISO 20794-7:2020

R_{MASTER}	master node resistor
R_{SLAVE}	slave node resistor
t_{bit}	bit time
$t_{rx_dif_cont}$	difference of the dominant time between logical value 1 and logical value 0
$t_{rx_wakeup_clk}$	time that the receiving clock master detects the width of dominant level as the wake-up pulse
t_{rx_wakeup}	time that the receiving node detects each width of dominant level in the wake-up pulse from first dominant pulse
$t_{rx_wakeup_space}$	limitation time of acceptance second dominant pulse in the wake-up pulse from first dominant pulse
t_{tx_wakeup}	time that the transceiver node transmits the dominant voltage of the wake-up pulse
$t_{tx_wakeup_space}$	interval time between two of dominant level of transmitting wake-up pulse
$t_{tx_0_lo}$	dominant time of logical value 0
$t_{tx_0_lo_dom}$	dominant time of logical value 0 (TH_{tx_dom} = 30 % of V_{SUP})
$t_{tx_0_lo_rec}$	dominant time of logical value 0 (TH_{tx_rec} = 70 % of V_{SUP})
$t_{tx_0_pd}$	at the time of logical value 0 outputs, time from the LO level detection of the CXPI network until falling the voltage TH_{tx_dom} = 30 % of V_{SUP}
$t_{tx_1_lo}$	dominant time of logical value 1
$t_{tx_1_lo_dom}$	dominant time of logical value 1 (TH_{tx_dom} = 30 % of V_{SUP})
$t_{tx_1_lo_rec}$	dominant time of logical value 1 (TH_{tx_rec} = 70 % of V_{SUP})
TH_{tx_dom}	dominant threshold voltage of the driver node
TH_{tx_rec}	recessive threshold voltage of the driver node
V_{BUS}	voltage of CXPI network
V_{BUS_CNT}	centre recessive threshold voltage of the received node
V_{HYS}	hysteresis voltage between the recessive threshold voltage and the dominant threshold voltage of the received node
V_{th_dom}	measured value of the dominant threshold voltage of the received node
V_{th_rec}	measured value of the recessive threshold voltage of the received node
V_{rec_master}	maximum recessive level of logical value 1

4.2 Abbreviated terms

AC	alternating current
CRC	cyclic redundancy check
DLC	data length code

© ISO 2020 – All rights reserved
Documents
Document Sharing Hub
Full document details: BS ISO 20794-7:2020

DLL	data link layer
ECU	electronic control unit
FI	frame information
HI	high
IBS	inter byte space
ID	identifier
IFS	inter frame space
LO	low
N/A	not applicable
NM	network management
OSI	open systems interconnection
PID	protected identifier
PHY	physical layer
PMA	physical media attachment
PMD	physical media dependent
PS	physical signalling
PWM	pulse width modulation
RX_{PWM}	PMA receiver interface signal
SUT	system under test
TH	threshold
TX_{PWM}	PMA transmits interface signal
TYPE	frame type

5 Conventions

This document is based on OSI service conventions as specified in ISO/IEC 10731[2] and ISO/IEC 9646-1[1] for conformance test system set-up.

6 General test specification considerations

6.1 General

This document covers the conformance test cases (CTC) to verify the requirements described in ISO 20794-4:2020 data link layer and physical layer document.

© ISO 2020 – All rights reserved

Documents
Document Sharing Hub
Full document details: BS ISO 20794-7:2020

6.2 Test conditions

Tests can be performed at room temperature, if the temperature is in the range of 15° C to 35° C. Also, the tests shall be performed under room EMI (electro-magnetic interference) conditions.

6.3 IUT requirements

The occurrence of the error specified in ISO 20794-2:2020, 9.6.8 shall be notified to the other nodes. IUT shall be initialised in the test case respectively.

6.4 CTC definition

The definition of each test case specifies, whether the IUT is a master or slave node. Each CTC is defined in the structure as defined in Table 1.

Table 1 — CTC definition example

Item	Content
CTC # – Title	[OSI layer #].CTC_[number_name] E.g. 2.CTC_2.6 – L_FI_DLC ≠ 1111_2 and frame data verification 2 if DLC is 1101_2 or 1110_2
Purpose	This CTC verifies that the DLC field for the frame of L_FI_DLC ≠ 1111_2 complies with the CXPI specification.
Reference	ISO 20794-4:2020: — REQ 2.10 DLL – L_FI_DLC (data length code); — REQ 2.30 DLL – Function models – DLL – Transmission logic; — REQ 2.31 DLL – Function models – DLL – Reception logic.
Prerequisite	The test system set-up shall be in accordance with Figure 2.
Set-up	— The IUT shall be configured as a master node or a slave node. — The IUT shall be configured to L_ErrDet1 (see 6.6.4) and in addition support TST_FRM_01_REQ_PID, TST_FRM_11_RESP_12, TST_FRM_05_REQ_PID_ERRBIT, and TST_FRM_18_RESP_ERRBIT_0-12. — The bit rate shall be set to the default value (see 6.6.2). — The SUT shall be initialised to default (see 6.7).
Step	1. The LT shall transmit TST_FRM_01_REQ_PID and TST_FRM_11_RESP_12 changing the DLC value as specified in Table 22. 2. The IUT does not detect any error and reports the result to higher OSI layers. 3. The LT shall transmit TST_FRM_05_REQ_PID_ERRBIT (refer to remark 1). 4. The IUT transmits TST_FRM_05_REQ_PID_ERRBIT (refer to remark 2) and TST_FRM_18_RESP_ERRBIT_0-12. 5. The LT shall observe TST_FRM_18_RESP_ERRBIT_0-12 with the result of detect error bit on the CXPI network.
Iteration	Steps are executed for each test case specified in Table 22; REPEAT step 1 to step 5, 2 times; The LT shall set L_FI_DLC as specified in Table 22; REPEAT END.
Expected response	After step 1: The IUT receives TST_FRM_11_RESP_12 as 12 data bytes regardless of L_FI_DLC value. After step 4: The IUT transmits TST_FRM_18_RESP_ERRBIT_0-12 with the error bit = FALSE.

© ISO 2020 – All rights reserved
AVA Documents Document Sharing Hub
Full document details: BS ISO 20794-7:2020

Table 1 *(continued)*

Item	Content
	After step 5: The LT shall receive TST_FRM_18_RESP_ERRBIT_0-12 with the error bit = FALSE.
Remark	1. If the IUT transmits the TST_FRM_18_RESP_ERRBIT_0-12 then the LT is expected to transmit this TST_FRM_05_REQ_PID_ERRBIT message. 2. Step 4 can be skipped if step 3 is required.

6.5 Test system set-up

The test system set-up follows the ISO/IEC 9646-1 and consists of a test system and a system under test (SUT) connected via the physical medium. The test system implements an UT and a LT. The UT uses the test control protocol (see Figure 2, key 2) to control the LT. The LT supports the functionality required to test the OSI layers (see Figure 2, key 4) of the IUT. The test system uses the IUT-specific set-up parameters (see Figure 2, key 1) for testing the communication with the IUT.

The control and measurement functionality is provided by direct access to the service interface (see Figure 2, key 3) and the associated parameters of the OSI layers as specified in the ISO 20794 series. The conformance test controller manipulates the service interface parameters of the OSI layers to fulfil the purpose of each conformance test case (CTC). The test system ensures the precision of the bit time and bit synchronisation of the master node as specified in ISO 20794-4:2020, 9.3.7. If the IUT is a master node then the LT functions as a slave node. If the IUT is a slave node then the LT functions as a master node.

© ISO 2020 – All rights reserved

Documents
Document Sharing Hub
Full document details: BS ISO 20794-7:2020

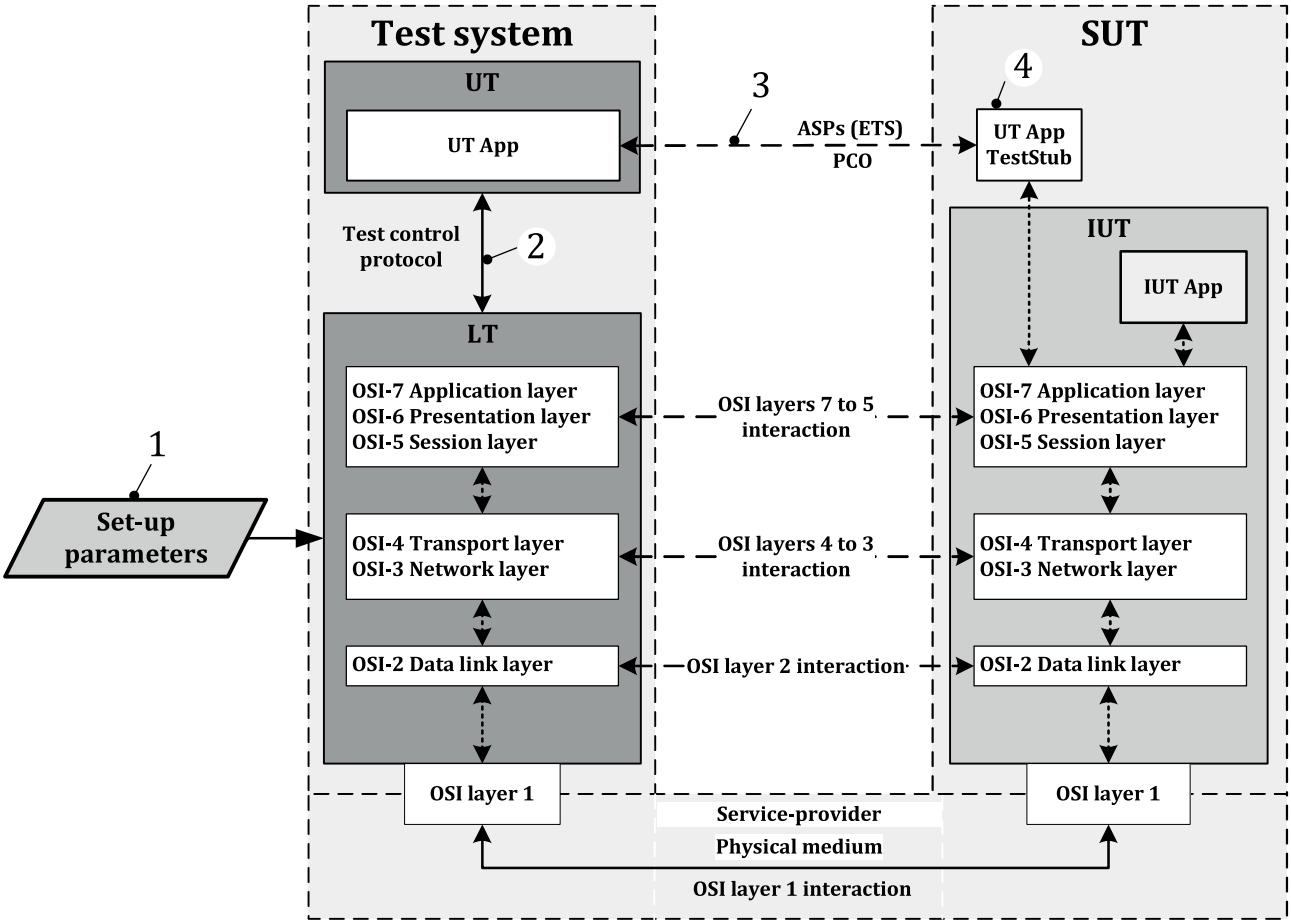

Key

1 set-up parameters (CXPI node's electronic data sheet)

2 test control protocol

3 abstract service primitives (ASPs) based on enhanced testability services (ETS) and points of control and observation (PCO)

4 upper tester application test stub

Figure 2 — Test system set-up

6.6 Configuration of test system and IUT

6.6.1 General

The test system requires set-up parameters (see Figure 2 key 1), which specify data link layer and physical layer properties of the IUT. The IUT-specific data sheet (see Figure 2, key 1) includes set-up parameters, which the test system requires to perform the CTCs.

Table 2 specifies the configuration of test system and the IUT in the CTCs. In each CTC description, configuration is specified in the 'configuration' column.

© ISO 2020 – All rights reserved
Documents
Document Sharing Hub
Full document details: BS ISO 20794-7:2020

Table 2 — Configuration of test system and IUT

Configuration item	Configuration of test system and IUT				
	Default	L_ErrDet1	L_ErrDet2	L_Arbit	L_Unknown
Request identifier by test system	N/A	N/A	N/A	Higher priority	N/A
L_PID	Any valid	Any valid	Any invalid	Any valid	Any invalid
IBS	Less than 9-bit length and more than 1-bit length				
TST_FRM_05_REQ_PID_ERRBIT	N/A	Use	Use	N/A	N/A

Table 3 specifies test message names, which are used by the IUT and the test system in the CTCs. In each CTC description, the message setting is specified in the 'description' column. The configuration described is a suitable configuration for each CTC. If there is no reference to Table 3, the settings are specified in the CTC.

If the IUT is not able to support the given FrameId, it is possible to replace the given FrameId with the FrameId that the IUT can handle.

All frames used are selected so that they should be valid for the IUT. If the specification does not specify the direction (transmission or reception) of frame transfer, the IUT shall have both transmission and reception ability in principle.

Table 3 — Configuration of test frame used by IUT and test system

Name	Definition
TST_FRM_00_REQ_PTYPE	Test frame 00_{16} of master node including a PtypeId value (00_{16}) of L_ReqId.
TST_FRM_01_REQ_PID	Test frame 01_{16} of master or slave node including an L_PID value (01_{16} to $7F_{16}$,) of L_ReqId.
TST_FRM_03_REQ_PID_UNKNOWN	Test frame 03_{16} of master or slave node including an unknown L_PID value of L_ReqId (not defined for reception/transmission by IUT).
TST_FRM_05_REQ_PID_ERRBIT	Test frame 05_{16} of master or slave node including an error bit L_PID value (01_{16} to $7F_{16}$,) of L_ReqId. The value of this PID can use supplier-specific ReqId ($3F_{16}$).
TST_FRM_10_RESP_0-12	Test frame 10_{16} of master or slave node including an FI field, DATA field and CRC field determined by $00_{16} \leq$ L_Length $\leq 0C_{16}$.
TST_FRM_12_RESP_LONG_0-255	Test frame 12_{16} of master or slave node including an FI field, DATA field and CRC field determined by $00_{16} \leq$ L_Length $\leq FF_{16}$.
TST_FRM_13_RESP_UNKOWN_0-12	Test frame 13_{16} of master or slave node including an FI field, DATA field and CRC field (not defined for reception/transmission by IUT) with a correct parity bit determined by $00_{16} \leq$ L_Length $\leq 0C_{16}$.
TST_FRM_16_RESP_ERRBIT_0-12	Test frame 16_{16} of master or slave node including an FI field, DATA field with an error bit and CRC field determined by $00_{16} \leq$ L_Length $\leq 0C_{16}$.

6.6.2 IUT-specific set-up parameters

The IUT-specific set-up parameters include at least the following information.

— The request identifier uses 01_{16} to $7F_{16}$ and uses 00_{16} in the request protected type identifier field. The useage of other values is invalid.

— The bit rate shall be set following each test case, and default bit rate is specified as 20 kbit/s.

— The delay between the L_PID field and response field shall comply with ISO 20794-4:2020, 8.6.1.

— If width of LO level of logical value 1 is maximum $t_{tx_1_lo_rec_TS} = 0{,}39\ t_{bit} + 0{,}6\ \tau$, then the test is done with $\tau = 5$.

© ISO 2020 – All rights reserved

AVA Documents Document Sharing Hub
Full document details: BS ISO 20794-7:2020

— DID associated result parameter error information related to CXPI data link layer and CXPI physical layer.

6.6.3 Default configurations

The default parameters include at least the following information:

— L_PID: sets any valid value supported by IUT; and

— IBS: less than 9-bit length and more than 1-bit length.

6.6.4 L_ErrDet1 configurations

The L_ErrDet1 parameters include at least the following information:

— L_PID: sets any valid value supported by IUT;

— IBS: less than 9-bit length and more than 1-bit length; and

— TST_FRM_05_REQ_PID_ERRBIT: supported by IUT.

6.6.5 L_ErrDet2 configurations

The L_ErrDet2 parameters include at least the following information:

— L_PID: sets any invalid value;

— IBS: less than 9-bit length and more than 1-bit length; and

— TST_FRM_05_REQ_PID_ERRBIT: supported by IUT.

6.6.6 L_Arbit configurations

The L_Arbit parameters include at least the following information:

— L_PID: sets any valid value supported by IUT; and

— IBS: less than 9-bit length and more than 1-bit length.

6.6.7 L_Unknown configurations

The L_Unknown parameters include at least the following information:

— L_PID: sets any invalid value; and

— IBS: less than 9-bit length and more than 1-bit length.

6.7 SUT initialisation

An initialisation of the SUT shall be performed before each CTC, it is as follows:

— default initialisation – the IUT shall be reset so that the transmission/reception of L_ReqIds shall be configured and the error counter value is reset (to 0). If the IUT is a master node, it shall be ready to transmit the request field to the lower OSI layer. If the IUT is a slave node, it shall be ready to transmit response PDUs upon the reception of a L_ReqIds from the master node;

— L_PwrMng1 initialisation;

— SUT shall be powered off;

— L_PwrMng2 initialisation; and

© ISO 2020 – All rights reserved
Documents
Document Sharing Hub
Full document details: BS ISO 20794-7:2020

— SUT shall be powered, but the IUT shall not transmit and receive bits.

6.8 Additional test system set-up capabilities

6.8.1 CXPI network data generator

The CXPI network data generator as the test system shall be able to transmit CXPI frames with adjustable recessive/dominant levels, duty cycle of logical value 1 and 0.

Figure 3 shows an example of a CXPI waveform which the test system transmits. The dominant width (duty cycle) $t_{tx_1_lo_dom_TS}$ and $t_{tx_0_lo_dom_TS}$ of the logical value 1 and 0 waveform or the recessive width (duty cycle) $t_{rx_0_hi_TS}$ of the logical value 0 waveform are defined in each test. If there is no definition for each test, it shall comply with Table 4. To be $t_{tx_1_lo_dom_TS} \approx t_{tx_1_lo_rec_TS}$ and $t_{tx_0_lo_dom_TS} \approx t_{tx_0_lo_rec_TS}$, the rising and falling edge shall set as sharp as possible.

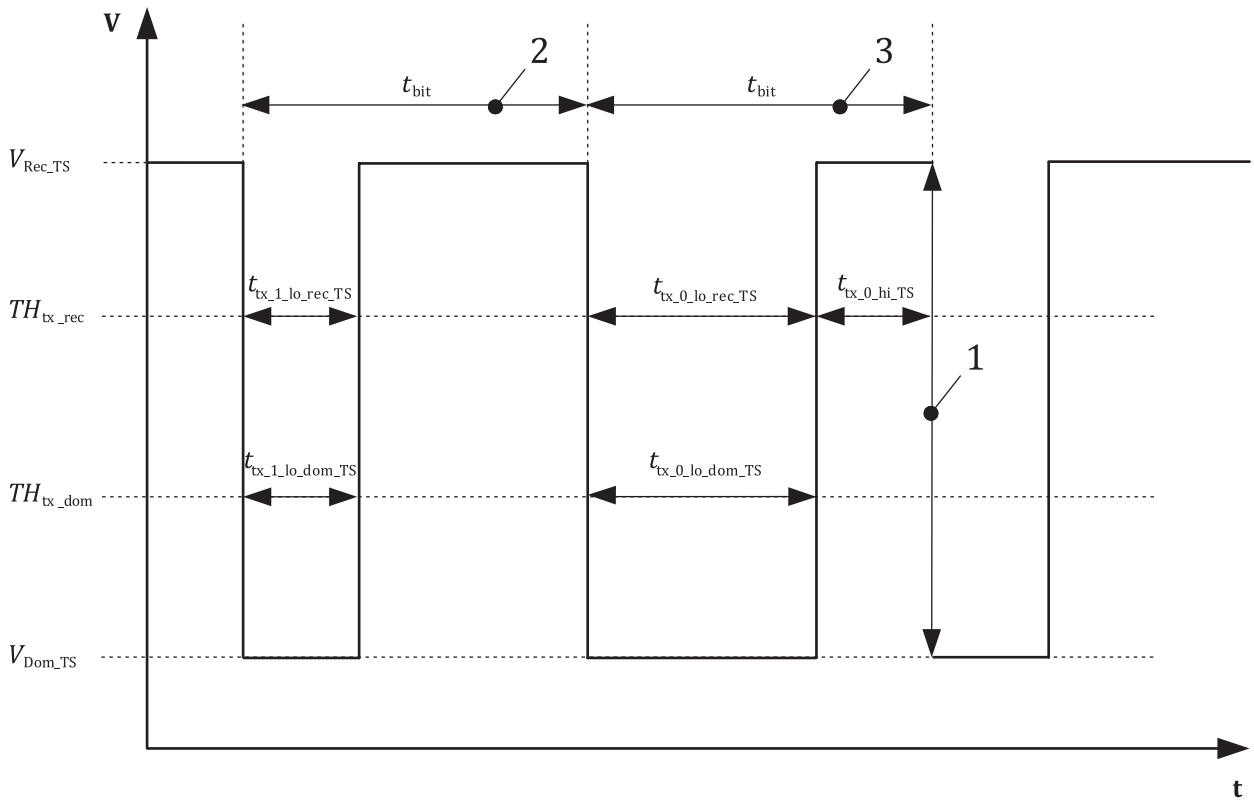

Key

1 amplitude (signal voltage)

2 t_{bit} logical value 1

3 t_{bit} logical value 0

V voltage

t time

Figure 3 — PWM signal

Table 4 defines the typical value of the dominant time (the logical value 1 and 0).

© ISO 2020 – All rights reserved

Documents
Document Sharing Hub
Full document details: BS ISO 20794-7:2020

Table 4 — Typical value of dominant time (logical value 1 and 0)

$t_{tx_1_lo_dom_TS}$ (LO width of logical value 1)	$t_{tx_0_lo_dom_TS}$ (LO width of logical value 0)
12,5 µs ±10 % (at t_{bit}=20 kbit/s)	35 µs ±10 % (at t_{bit}=20 kbit/s)

Figure 4 shows an example of the test system as master node transmits the L_PID field which is adjusted the dominant voltage (V_{Dom_TS}) and the IUT as a slave node transmits response by the nominal dominant voltage value (V_{Dom_IUT}).

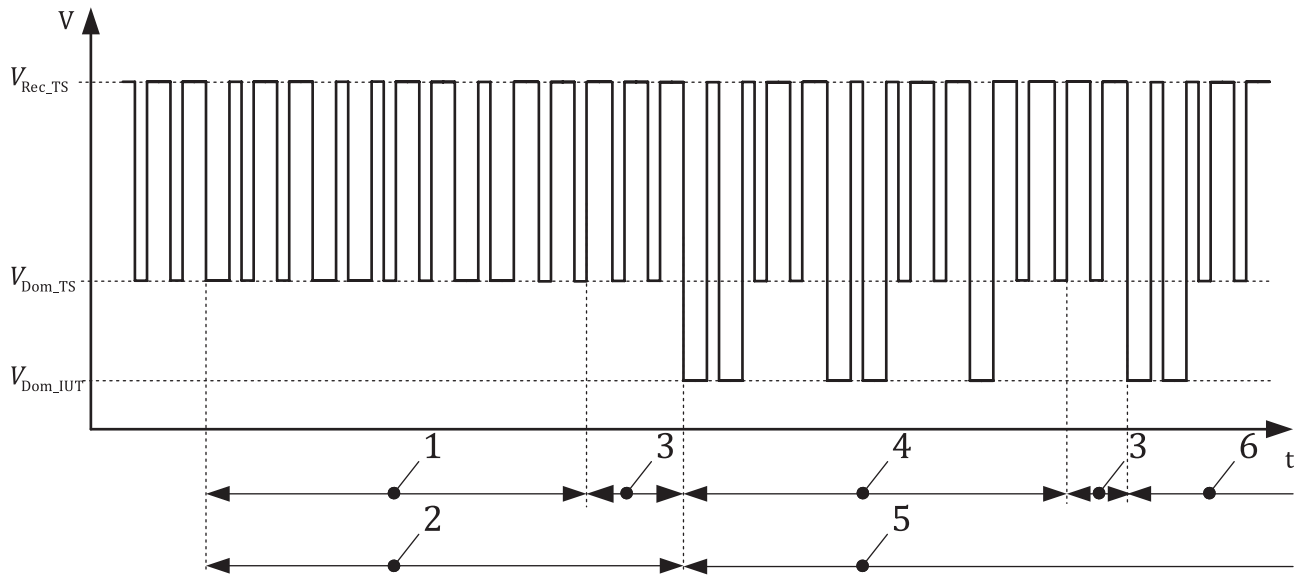

Key

1 L_PID field
2 transmission by test system as master node
3 IBS
4 frame information
5 transmission by IUT as slave node
6 data 1
V voltage
t time

Figure 4 — Example of test system as master node and IUT as slave node dominant voltage behaviour

The test system shall be able to transmit the L_PID field or the response field. It also shall be able to change the response dynamically according to the CXPI frame received. The CXPI network data generator test set-up is shown in Figure 5.

© ISO 2020 – All rights reserved
Documents
Document Sharing Hub
Full document details: BS ISO 20794-7:2020

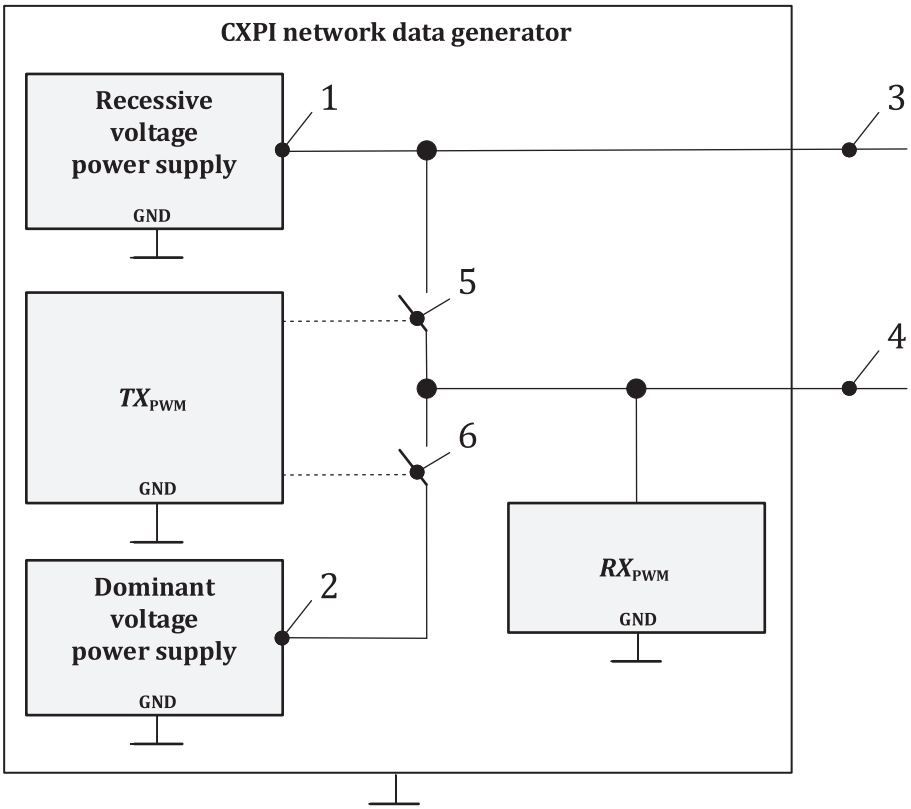

Key

1 V_{Rec_TS}
2 V_{Dom_TS}
3 $V_{Pull\text{-}up}$
4 CXPI network
5 switch 1
6 switch 2

Figure 5 — CXPI network data generator test set-up

The CXPI network data generator includes the two power supply devices which provide the dominant voltage (V_{Dom_TS}) and recessive voltage (V_{Rec_TS}) to transmit the CXPI frame. CXPI network data generator shall be able to transmit the recessive voltage by connecting the CXPI network to the recessive voltage power via low impedance pass (switch 1). The V_{Dom_TS} and $V_{Rec_TS}/V_{Pull\text{-}up}$ are defined for each test where CXPI network data generator is used.

6.8.2 *TXD* data generator

The *TXD* data generator as the test system shall be able to transmit frames with a logical value of 1 and a logical value of 0.

Figure 6 shows an example of a waveform which the test system transmits. The waveform of *TXD* is formed by non-return to zero. Configure the rise/fall time of the waveform as short as possible.

© ISO 2020 – All rights reserved

Documents
Document Sharing Hub
Full document details: BS ISO 20794-7:2020

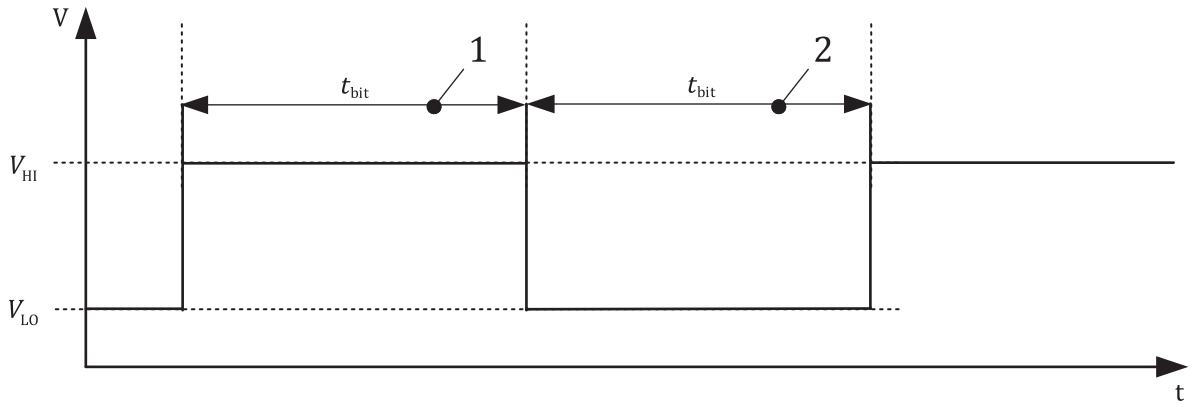

Key

1 t_{bit} logical value of 1
2 t_{bit} logical value of 0
V voltage
t time

Figure 6 — *TXD* signal

An example of L_PID field and response field transmitted to IUT from *TXD* data generator is shown in Figure 7.

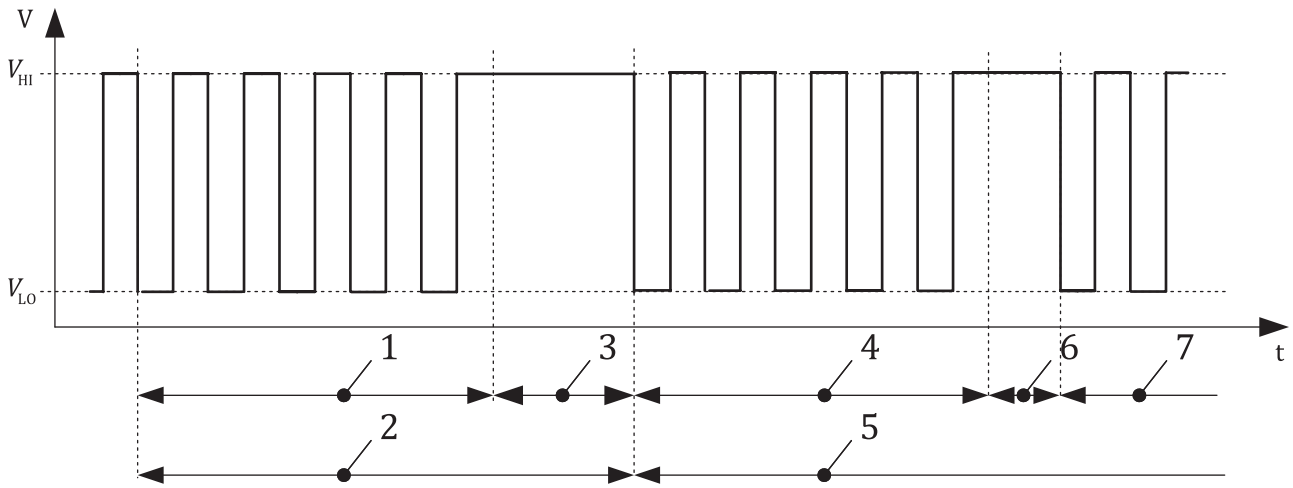

Key

1 L_PID field
2 transmission by test system as master node
3 IBS (4 bit)
4 frame information
5 transmission by IUT as slave node
6 IBS (2 bit)
7 data 1
V voltage
t time

Figure 7 — Operation example

The *TXD* data generator for test set-up is shown in Figure 8.

© ISO 2020 – All rights reserved
Documents
Document Sharing Hub
Full document details: BS ISO 20794-7:2020

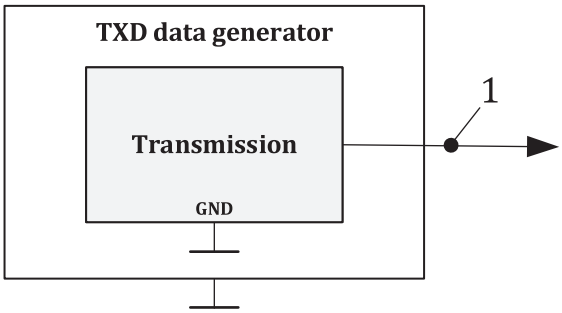

Key

1 *TXD*

Figure 8 — *TXD* data generator test set-up

The *TXD* data generator transmits data within the range of voltage V_{HI} and V_{LO}.

6.8.3 TX_{PWM} data generator

The TX_{PWM} data generator as the test system shall be able to transmit the CXPI frames with adjustable V_{HI}/V_{LO} levels, duty cycle of logical value 1 and 0.

Figure 9 shows an example of the TX_{PWM} waveform. The width (t_{bit}) of a logical value 1 and 0 waveform is determined by $D_{tx_1_lo_dom_TS}$ or $D_{tx_0_lo_dom_TS}$. All CTCs shall be in accordance with Table 6.

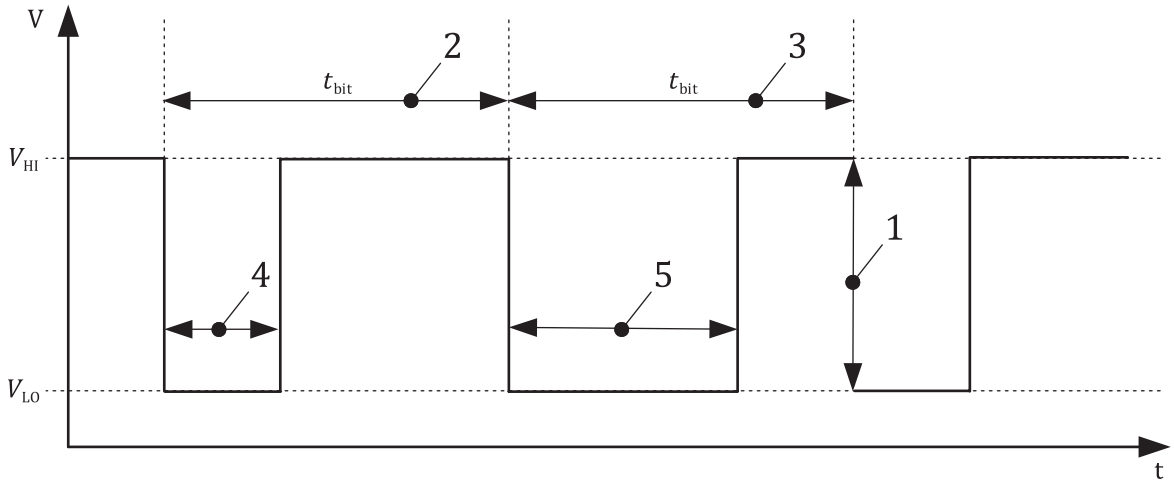

Key

1 amplitude (signal voltage)

2 t_{bit} logical value 1

3 t_{bit} logical value 0

4 $t_{tx_1_lo_dom_TS}$

5 $t_{tx_0_lo_dom_TS}$

V voltage

t time

Figure 9 — TX_{PWM} signal

Table 5 defines the typical value of the dominant time (the logical value 1 and 0).

© ISO 2020 – All rights reserved

Documents
Document Sharing Hub
Full document details: BS ISO 20794-7:2020

Table 5 — Typical value of dominant time (logical value 1 and 0)

$D_{tx_1_lo_dom_TS}$ (LO width of logical value 1)	$D_{tx_0_lo_dom_TS}$ (LO width of logical value 0)
(12,5 ± 1,25) µs (at t_{bit}=20 kbit/s)	(35 ± 3,5) µs (at t_{bit}=20 kbit/s)

The TX_{PWM} data generator for test set-up is shown in Figure 10.

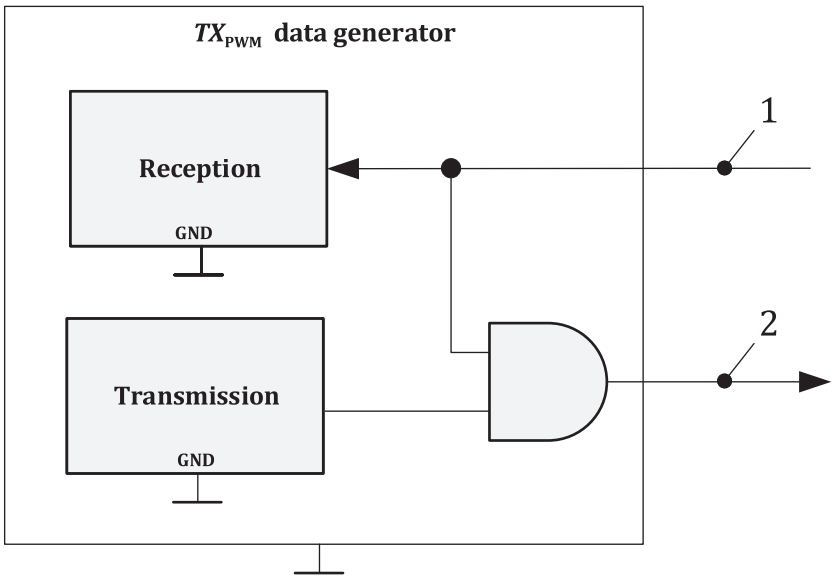

Key

1 RX_{PWM}

2 TX_{PWM}

3 logical gate AND

Figure 10 — TX_{PWM} data generator test set-up

The TX_{PWM} data generator includes the transmission and reception. When RX_{PWM} is logical value 1, the TX_{PWM} data generator outputs PWM waveform.

6.8.4 RX_{PWM} data generator

The RX_{PWM} data generator as the test system shall be able to transmit the CXPI frames with adjustable V_{HI}/V_{LO} levels, duty cycle of alogical value 1 and 0.

Figure 11 shows an example of a RX_{PWM} waveform. The width (t_{bit}) of a logical value 1 and 0 waveform is determined by $D_{tx_1_lo_dom_TS}$ or $D_{tx_0_lo_dom_TS}$. All CTCs shall be in accordance with Table 6.

© ISO 2020 – All rights reserved
Documents
Document Sharing Hub
Full document details: BS ISO 20794-7:2020

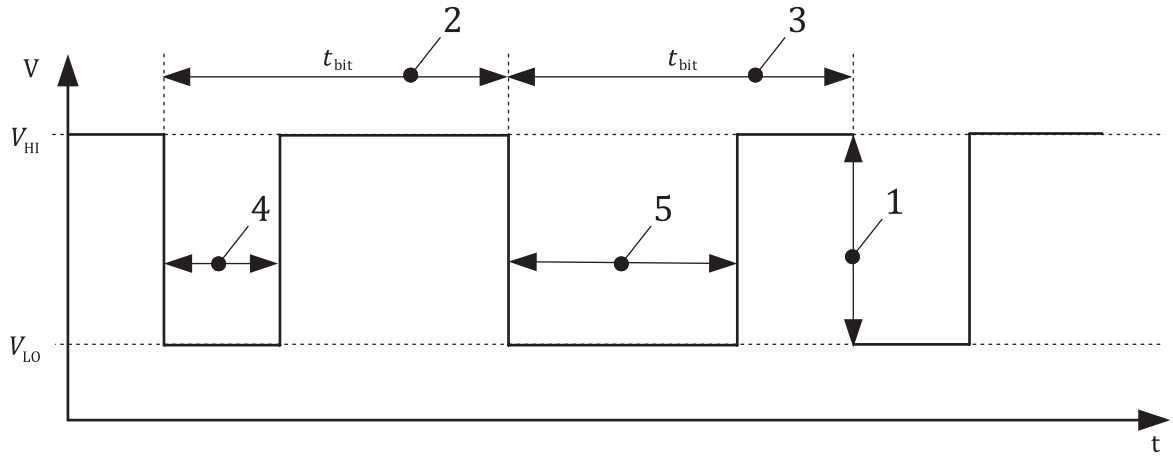

Key

1 amplitude (signal voltage)
2 t_{bit} logical value 1
3 t_{bit} logical value 0
4 $t_{tx_1_lo_dom_TS}$
5 $t_{tx_0_lo_dom_TS}$
V voltage
t time

Figure 11 — RX_{PWM} signal

Table 6 defines the typical value of the dominant time (the logical value 1 and 0).

Table 6 — Typical value of dominant time (logical value 1 and 0)

$t_{tx_1_lo_dom_TS}$ (LO width of logical value 1)	$t_{tx_0_lo_dom_TS}$ (LO width of logical value 0)
12,5 µs ±10 % (at t_{bit}=20 kbit/s)	35 µs ±10 % (at t_{bit}=20 kbit/s)

The RX_{PWM} data generator for the test set-up is shown in Figure 12.

© ISO 2020 – All rights reserved

Documents
Document Sharing Hub
Full document details: BS ISO 20794-7:2020

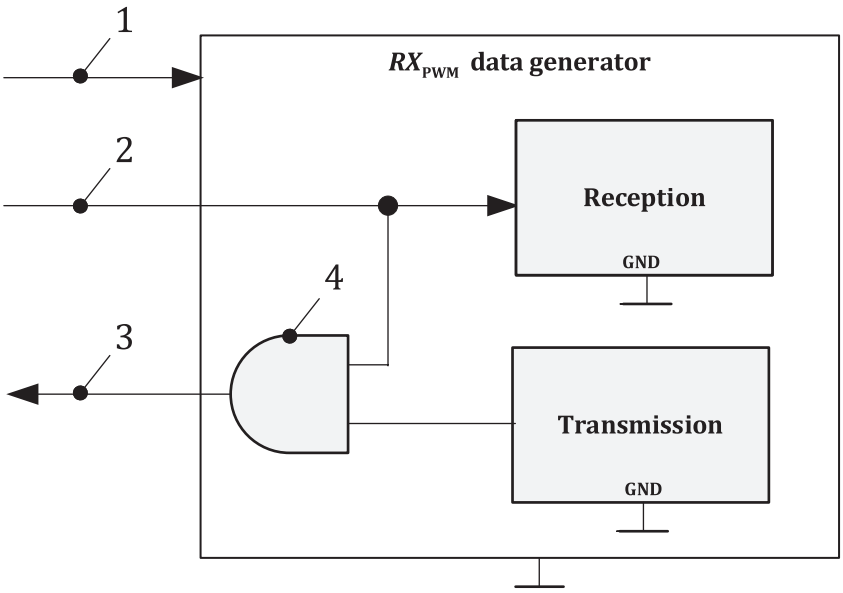

Key

1 *TXD* (for synchronisation of the *TXD* data generator)

2 TX_{PWM}

3 RX_{PWM}

4 logical gate "AND"

Figure 12 — RX_{PWM} data generator test set-up

The RX_{PWM} data generator includes the transmission and reception. When the TX_{PWM} has a logical value 1, the RX_{PWM} data generator outputs the PWM waveform.

6.8.5 Other requirements

Table 7 specifies the line characteristics requirements.

Table 7 — Line characteristics requirements

Line characteristics range	Description
$1 \leq \tau \leq 5$[a]	Time constant of the entire system τ
[a] If the width of the LO level of the logical value 1 is minimum $t_{tx_1_lo_dom_TS} = 0{,}11\ t_{bit}$, then the test shall be done with $\tau = 1$. If the width of the LO level of the logical value 1 is maximum $t_{tx_1_lo_rec_TS} = 0{,}39\ t_{bit} + 0{,}6\ \tau$, then the test shall be done with $\tau = 5$.	

7 Data link layer conformance test plan

7.1 General

The data link layer conformance test evaluates the operation of the response field (L_PDU), whether those are transmitted and received in the correct order according to ISO 20794-4. This conformance test only covers the data link layer service functionality.

7.2 CTP – Timing parameters

7.2.1 2.CTC_1.1 – IBS length

Table 8 specifies the CTC that verifies the 2.CTC_1.1 – IBS length.

© ISO 2020 – All rights reserved
Documents
Document Sharing Hub
Full document details: BS ISO 20794-7:2020

Table 8 — 2.CTC_1.1 – IBS length

Item	Content
CTC # – Title	2.CTC_1.1 – IBS length
Purpose	This CTC verifies that the length of the IBS complies with the CXPI specification.
Reference	ISO 20794-4:2020: — REQ 2.19 DLL – Internal operation – Unsegmented frame; — REQ 2.20 DLL – Internal operation – Frame serialisation and bit order; — REQ 2.21 DLL – IBS timing handling.
Prerequisite	The test system set-up shall be in accordance with Figure 2.
Set-up	— The IUT shall be configured as a master node or a slave node. — The IUT shall be configured to default configurations (see 6.6.3) and in addition support TST_FRM_00_REQ_PTYPE, TST_FRM_01_REQ_PID and TST_FRM_10_RESP_0-12. — The bit rate shall be set to the default value (see 6.6.2). — The SUT shall be initialised to default (see 6.7).
Step	1. The UT shall control the IUT to transmit the TST_FRM_00_REQ_PTYPE (see remark 1), the TST_FRM_01_REQ_PID and the TST_FRM_10_RESP_0-12.
Iteration	Not applicable
Expected response	After step 1: The LT shall observe an IBS between the TST_FRM_00_REQ_PTYPE and the TST_FRM_01_REQ_PID, which is more than 1-bit in length and less than 9-bit in length. The LT shall observe an IBS between the TST_FRM_01_REQ_PID and the TST_FRM_10_RESP_0-12, which is more than 1-bit in length and less than 9-bit in length. The LT shall observe IBS between each byte of the TST_FRM_10_RESP_0-12, which is more than 1-bit in length and less than 9-bit in length.
Remark	1. The TST_FRM_00_REQ_PTYPE is only applicable to the IUTs which support polling method.

7.2.2 2.CTC_1.2 – IFS length

Table 9 specifies the CTC that verifies the 2.CTC_1.2 – IFS length.

Table 9 — 2.CTC_1.2 – IFS length

Item	Content
CTC # – Title	2.CTC_1.2 – IFS length
Purpose	This CTC verifies that the length of the IFS complies with the CXPI specification. This CTC is applicable only to an IUT, which support the L_PID field transmission.
Reference	ISO 20794-4:2020, REQ 2.22 DLL – IFS timing handling.
Prerequisite	The test system set-up shall be in accordance with Figure 2.
Set-up	— The IUT shall be configured as a master node or a slave node. — The IUT shall be configured to default configurations (see 6.6.3) and in addition support TST_FRM_01_REQ_PID. — The bit rate shall be set to the default value (see 6.6.2). — The SUT shall be initialised to default (see 6.7).
Step	1. The UT shall control the IUT to transmit the TST_FRM_01_REQ_PID during any other frame transmission.
Iteration	Not applicable

© ISO 2020 – All rights reserved

Documents
Document Sharing Hub
Full document details: BS ISO 20794-7:2020

Table 9 *(continued)*

Item	Content
Expected response	After step 1: The LT shall observe an IFS between the TST_FRM_01_REQ_PID and any other frame transmission, which is more than 20-bit in length.
Remark	---

7.2.3 2.CTC_1.3 – Frame reception starting condition 1 without the error bit

Table 10 specifies the CTC that verifies the 2.CTC_1.3 – Frame reception starting condition 1 without the error bit.

Table 10 — 2.CTC_1.3 – Frame reception starting condition 1 without the error bit

Item	Content
CTC # – Title	2.CTC_1.3 – Frame reception starting condition 1 without the error bit
Purpose	This CTC verifies that the starting condition of a frame reception complies with the CXPI specification.
Reference	ISO 20794-4:2020, REQ 2.23 DLL – Beginning condition of frame.
Prerequisite	The test system set-up shall be in accordance with Figure 2.
Set-up	— The IUT shall be configured as a master node or a slave node. — The IUT shall be configured to default configurations (see 6.6.3) and in addition support TST_FRM_01_REQ_PID and TST_FRM_10_RESP_0-12. — The bit rate shall be set to the default value (see 6.6.2). — The SUT shall be initialised to default (see 6.7).
Step	1. The LT shall transmit the TST_FRM_01_REQ_PID and the TST_FRM_10_RESP_0-12. 2. The LT shall transmit the TST_FRM_01_REQ_PID with 11-bit IFS interval, to make the IUT transmits the TST_FRM_10_RESP_0-12.
Iteration	Not applicable
Expected response	After step 2: The IUT shall transmit the TST_FRM_10_RESP_0-12. The LT shall receive the TST_FRM_10_RESP_0-12 and shall report to the UT.
Remark	---

7.2.4 2.CTC_1.4 – Frame reception starting condition 1 with the error bit

Table 11 specifies the CTC that verifies the 2.CTC_1.4 – Frame reception starting condition 1 with the error bit.

Table 11 — 2.CTC_1.4 – Frame reception starting condition 1 with the error bit

Item	Content
CTC # – Title	2.CTC_1.4 – Frame reception starting condition 1 with the error bit
Purpose	This CTC verifies that the starting condition of the frame reception complies with the CXPI specification.
Reference	ISO 20794-4:2020, REQ 2.23 DLL – Beginning condition of frame.
Prerequisite	The test system set-up shall be in accordance with Figure 2.

© ISO 2020 – All rights reserved
Documents
Document Sharing Hub
Full document details: BS ISO 20794-7:2020

Table 11 *(continued)*

Item	Content
Set-up	— The IUT shall be configured as a master node or a slave node. — The IUT shall be configured to L_ErrDet1 configurations (see 6.6.3) and in addition support TST_FRM_01_REQ_PID, TST_FRM_10_RESP_0-12, TST_FRM_05_REQ_PID_ERRBIT and TST_FRM_16_RESP_ERRBIT_0-12. — The bit rate shall be set to the default value (see 6.6.2). — The SUT shall be initialised to default (see 6.7).
Step	1. The LT shall transmit the TST_FRM_01_REQ_PID and the TST_FRM_10_RESP_0-12. 2. The LT shall transmit the TST_FRM_01_REQ_PID and the TST_FRM_10_RESP_0-12 with 11-bit IFS interval. 3. The LT shall transmit the TST_FRM_05_REQ_PID.
Iteration	Not applicable
Expected response	After step 2: The IUT shall receive the TST_FRM_01_REQ_PID and the TST_FRM_10_RESP_0-12. After step 3: The IUT shall transmit the TST_FRM_16_RESP_ERRBIT_0-12 with the error bit = FALSE. The LT shall receive the TST_FRM_16_RESP_ERRBIT_0-12 with the error bit = FALSE and shall report to the UT.
Remark	---

7.2.5 2.CTC_1.5 – Frame reception starting condition 2 without the error bit

Table 12 specifies the CTC that verifies the 2.CTC_1.5 – Frame reception starting condition 2 without the error bit.

Table 12 — 2.CTC_1.5 – Frame reception starting condition 2 without the error bit

Item	Content
CTC # – Title	2.CTC_1.5 – Frame reception starting condition 2 without the error bit
Purpose	This CTC verifies that the starting condition of the frame reception complies with the CXPI specification.
Reference	ISO 20794-4:2020, REQ 2.23 DLL – Beginning condition of frame.
Prerequisite	The test system set-up shall be in accordance with Figure 2.
Set-up	— The IUT shall be configured as a master node or a slave node. — The IUT shall be configured to default configurations (see 6.6.3) and in addition support TST_FRM_01_REQ_PID and TST_FRM_10_RESP_0-12. — The bit rate shall be set to the default value (see 6.6.2). — The SUT shall be initialised to default (see 6.7).
Step	1. The LT shall transmit the TST_FRM_01_REQ_PID and the TST_FRM_10_RESP_0-12. 2. The LT shall transmit the TST_FRM_01_REQ_PID with a 9-bit IFS interval, to make the IUT transmits the TST_FRM_10_RESP_0-12.
Iteration	Not applicable
Expected response	After step 2: The IUT shall not transmit the TST_FRM_10_RESP_0-12. The LT shall not receive the TST_FRM_10_RESP_0-12.
Remark	---

© ISO 2020 – All rights reserved

Documents
Document Sharing Hub
Full document details: BS ISO 20794-7:2020

7.2.6 2.CTC_1.6 – Frame reception starting condition 2 with the error bit

Table 13 specifies the CTC that verifies the 2.CTC_1.6 – Frame reception starting condition 2 with the error bit.

Table 13 — 2.CTC_1.6 – Frame reception starting condition 2 with the error bit

Item	Content
CTC # – Title	2.CTC_1.6 – Frame reception starting condition 2 with the error bit
Purpose	This CTC verifies that the starting condition of the frame reception complies with the CXPI specification.
Reference	ISO 20794-4:2020, REQ 2.23 DLL – Beginning condition of frame.
Prerequisite	The test system set-up shall be in accordance with Figure 2.
Set-up	— The IUT shall be configured as a master node or a slave node. — The IUT shall be configured to L_ErrDet1 configurations (see 6.6.3) and in addition support TST_FRM_01_REQ_PID, TST_FRM_10_RESP_0-12, TST_FRM_05_REQ_PID_ERRBIT and TST_FRM_16_RESP_ERRBIT_0-12. — The bit rate shall be set to the default value (see 6.6.2). — The SUT shall be initialised to default (see 6.7).
Step	1. The LT shall transmit the TST_FRM_01_REQ_PID and the TST_FRM_10_RESP_0-12. 2. The LT shall transmit the TST_FRM_01_REQ_PID and the TST_FRM_10_RESP_0-12 with a 9-bit IFS interval. 3. The LT shall transmit the TST_FRM_05_REQ_PID.
Iteration	Not applicable
Expected response	After step 2: The IUT shall not receive the TST_FRM_01_REQ_PID and the TST_FRM_10_RESP_0-12. After step 3: The IUT shall transmit the TST_FRM_16_RESP_ERRBIT_0-12 with the error bit = TRUE. The LT shall receive the TST_FRM_16_RESP_ERRBIT_0-12 with the error bit = TRUE and shall report to the UT.
Remark	---

7.2.7 2.CTC_1.7 – Frame reception starting condition 3

Table 14 specifies the CTC that verifies the 2.CTC_1.7 – Frame reception starting condition 3.

Table 14 — 2.CTC_1.7 – Frame reception starting condition 3

Item	Content
CTC # – Title	2.CTC_1.7 – Frame reception starting condition 3
Purpose	This CTC verifies that the starting condition of the frame reception complies with the CXPI specification.
Reference	ISO 20794-4:2020, REQ 2.23 DLL – Beginning condition of frame.
Prerequisite	The test system set-up shall be in accordance with Figure 2.

© ISO 2020 – All rights reserved
Documents
Document Sharing Hub
Full document details: BS ISO 20794-7:2020

Table 14 *(continued)*

Item	Content
Set-up	— The IUT shall be configured as a master node or a slave node. — The IUT shall be configured to L_ErrDet1 configurations (see 6.6.4) and in addition support TST_FRM_01_REQ_PID, TST_FRM_10_RESP_0-12, TST_FRM_05_REQ_PID_ERRBIT and TST_FRM_16_RESP_ERRBIT_0-12. — The bit rate shall be set to the default value (see 6.6.2). — The SUT shall be initialised to L_PwrMng1 (see 6.7).
Step	1. The LT shall transmit the consecutive frames of the TST_FRM_01_REQ_PID and the TST_FRM_10_RESP_0-12 included the CRC error with a 10-bit IFS interval. If the IUT is a master node it shall prepare to transmit the test frame with a 10-bit IFS interval immediately after it receives the clock waveform, it shall be the TST_FRM_01_REQ_PID and the TST_FRM_10_RESP_0-12 included the CRC error. 2. The SUT shall be powered. 3. The LT shall transmit at least one the TST_FRM_01_REQ_PID and the TST_FRM_10_RESP_0-12 after completing the power-on and initialisation process of the IUT. 4. The LT shall transmit the TST_FRM_05_REQ_PID_ERRBIT in the interval of 20-bit of the IFS.
Iteration	Not applicable
Expected response	After step 4: The IUT shall transmit the TST_FRM_16_RESP_ERRBIT_0-12 with the error bit = FALSE. The LT shall receive the TST_FRM_16_RESP_ERRBIT_0-12 with the error bit = FALSE and shall report to the UT.
Remark	---

7.2.8 2.CTC_1.8 – Maximum length of the frame

Table 15 specifies the CTC that verifies the 2.CTC_1.8 – Maximum length of the frame.

Table 15 — 2.CTC_1.8 – Maximum length of the frame

Item	Content
CTC # – Title	2.CTC_1.8 – Maximum length of the frame
Purpose	This CTC verifies that the maximum length of the frame complies with the CXPI specification.
Reference	ISO 20794-4:2020, REQ 2.25 DLL – Frame transmission time.
Prerequisite	The test system set-up shall be in accordance with Figure 2.
Set-up	— The IUT shall be configured as a master node or a slave node. — The IUT shall be configured to default configurations (see 6.6.3) and in addition support TST_FRM_01_REQ_PID, TST_FRM_10_RESP_0-12 and TST_FRM_12_RESP_LONG_0-255. — The bit rate shall be set to the default value (see 6.6.2). — The SUT shall be initialised to default (see 6.7).
Step	1. The UT shall control the IUT to transmit each TST_FRM_01_REQ_PID and TST_FRM_10_RESP_0-12. 2. The UT shall control the IUT to transmit each TST_FRM_01_REQ_PID and TST_FRM_12_RESP_LONG_0-255 (see remark 1).
Iteration	Not applicable

© ISO 2020 – All rights reserved

Documents
Document Sharing Hub
Full document details: BS ISO 20794-7:2020

Table 15 *(continued)*

Item	Content
Expected response	After step 1: The IUT shall transmit the maximum value of the frame length which is less than or equal to (30 + (10 × data length)) ×1,9 bits in length. The LT shall receive the maximum value of the frame length which is less than or equal to (30 + (10 × data length)) ×1,9 bits in length and shall report to the UT. After step 2: The IUT shall transmit the maximum value of the frame length which is less than or equal to (50 + (10 × data length)) ×1,9 bits in length. The LT shall receive the maximum value of the frame length which is less than or equal to (50 + (10 × data length)) ×1,9 bits in length and shall report to the UT.
Remark	1. The TST_FRM_01_REQ_PID and the TST_FRM_13_RESP_LONG_0-255 is only applicable to the IUTs which support a frame of the L_FI_DLC = 1111_2.

7.3 CTP – Frame transmission/reception

7.3.1 2.CTC_2.1 – Response to L_PID field

Table 16 specifies the CTC that verifies the 2.CTC_2.1 – Response to L_PID field.

Table 16 — 2.CTC_2.1 – Response to L_PID field

Item	Content
CTC # – Title	2.CTC_2.1 – Response to L_PID field
Purpose	This CTC verifies that the IUT responds to the L_PID field with the proper frame format.
Reference	ISO 20794-4:2020: — REQ 2.5 DLL – Frame field definition; — REQ 2.7 DLL – Request identifier field; — REQ 2.8 DLL – L_PTYPE and L_PID parity determination; — REQ 2.12 DLL – DLL – L_FI_NM (network management); — REQ 2.13 DLL – L_FI_SCT (sequence count); — REQ 2.14 DLL – L_DATA (data field); — REQ 2.15 DLL – L_DATA (data field) – Big endian; — REQ 2.24 DLL – Start of frame; — REQ 2.27 DLL – Completing condition of L_PID field; — REQ 2.30 DLL – Function models – DLL – Transmission logic; — REQ 2.31 DLL – Function models – DLL – Reception logic.
Prerequisite	The test system set-up shall be in accordance with Figure 2.
Set-up	— The IUT shall be configured as a master node or a slave node. — The IUT shall be configured to default configurations (see 6.6.3) and in addition support TST_FRM_01_REQ_PID and the TST_FRM_10_RESP_0-12. — The bit rate shall be set to the default value (see 6.6.2). — The SUT shall be initialised to default (see 6.7).
Step	1. The LT shall transmit the TST_FRM_01_REQ_PID for the IUT to transmit the TST_FRM_10_RESP_0-12.
Iteration	Not applicable

© ISO 2020 – All rights reserved
Documents
Document Sharing Hub
Full document details: BS ISO 20794-7:2020

Table 16 *(continued)*

Item	Content	
Expected response	After step 1:	The IUT shall transmit the TST_FRM_10_RESP_0-12 which complies with ISO 20794-4:2020, 8.4.1. The LT shall receive the TST_FRM_10_RESP_0-12 which complies with ISO 20794-4:2020, 8.4.1 and shall report to the UT.
Remark	---	

7.3.2 2.CTC_2.2 – L_PID field transmission

Table 17 specifies the CTC that verifies the 2.CTC_2.2 – L_PID field transmission.

Table 17 — 2.CTC_2.2 – L_PID field transmission

Item	Content
CTC # – Title	2.CTC_2.2 – L_PID field transmission
Purpose	This CTC verifies that the L_PID field transmitted by the IUT. This CTC is applicable only to an IUT, which supports the L_PID field transmission.
Reference	ISO 20794-4:2020: — REQ 0.3 SIP – ReqId, request identifier; — REQ 2.5 DLL – Frame field definition; — REQ 2.7 DLL – Request identifier field; — REQ 2.8 DLL – L_PTYPE and L_PID parity determination; — REQ 2.27 DLL – Completing condition of L_PID field; — REQ 2.30 DLL – Function models – DLL – Transmission logic.
Prerequisite	The test system set-up shall be in accordance with Figure 2.
Set-up	— The IUT shall be configured as a master node or a slave node. — The IUT shall be configured to default configurations (see 6.6.3) and in addition support TST_FRM_01_REQ_PID. — The bit rate shall be set to the default value (see 6.6.2). — The SUT shall be initialised to default (see 6.7).
Step	1. The UT shall control the IUT to transmit the TST_FRM_01_REQ_PID.
Iteration	Not applicable
Expected response	After step 1: The IUT shall transmit the formats of the L_PID field which complies with ISO 20794-4:2020, 8.4.2. LT shall receive the TST_FRM_01_REQ_PID and shall report to the UT.
Remark	---

7.3.3 2.CTC_2.3 – L_PTYPE field transmission

Table 18 specifies the CTC that verifies the 2.CTC_2.3 – L_PTYPE field transmission.

© ISO 2020 – All rights reserved

Documents
Document Sharing Hub
Full document details: BS ISO 20794-7:2020

Table 18 — 2.CTC_2.3 – L_PTYPE field transmission

Item	Content
CTC # – Title	2.CTC_2.3 – L_PTYPE field transmission
Purpose	This CTC verifies that the L_PTYPE field transmitted by the IUT. This CTC is applicable only to an IUT, which support L_PTYPE field transmission.
Reference	ISO 20794-4:2020: — REQ 0.4 SIP – ReqTypeId, request type identifier; — REQ 2.6 DLL – Request type identifier field; — REQ 2.26 DLL – Completing condition of L_PTYPE field; — REQ 2.30 DLL – Function models – DLL – Transmission logic.
Prerequisite	The test system set-up shall be in accordance with Figure 2.
Set-up	— The IUT shall be configured as a master node. — The IUT shall be configured to default configurations (see 6.6.3) and in addition support TST_FRM_00_REQ_PTYPE. — The bit rate shall be set to the default value (see 6.6.2). — The SUT shall be initialised to default (see 6.7).
Step	1. The UT shall control the IUT to transmit the TST_FRM_00_REQ_PTYPE.
Iteration	Not applicable
Expected response	After step 1: The IUT shall transmit the format of the L_PTYPE field which complies with ISO 20794-4:2020, 8.4.2.1. The LT shall receive the TST_FRM_00_REQ_PTYPE and shall report to the UT.
Remark	---

7.3.4 2.CTC_2.4 – L_PTYPE field response function

Table 19 specifies the CTC that verifies the 2.CTC_2.4 – L_PTYPE field response function.

Table 19 — 2.CTC_2.4 – L_PTYPE field response function

Item	Content
CTC # – Title	2.CTC_2.4 – L_PTYPE field response function
Purpose	This CTC verifies that the IUT as a slave node responds to the L_PTYPE field. This CTC is applicable only to an IUT, which supports the L_PTYPE field response.
Reference	ISO 20794-4:2020:
	— REQ 2.6 DLL – Request type identifier field; — REQ 2.26 DLL – Completing condition of L_PTYPE field; — REQ 2.30 DLL – Function models – DLL – Transmission logic; — REQ 2.31 DLL – Function models – DLL – Reception logic.
Prerequisite	The test system set-up shall be in accordance with Figure 2.

© ISO 2020 – All rights reserved
Documents
Document Sharing Hub
Full document details: BS ISO 20794-7:2020

Table 19 *(continued)*

Item	Content
Set-up	— The IUT shall be configured as a slave node. — The IUT shall be configured to L_ErrDet1 configurations (see 6.6.4) and in addition support TST_FRM_00_REQ_PTYPE, TST_FRM_01_REQ_PID, TST_FRM_10_RESP_0-12, TST_FRM_05_REQ_PID_ERRBIT and TST_FRM_16_RESP_ERRBIT_0-12. — The bit rate shall be set to the default value (see 6.6.2). — The SUT shall be initialised to default (see 6.7).
Step	1. The UT shall control the IUT to transmit the TST_FRM_01_REQ_PID and the TST_FRM_10_RESP_0-12. 2. The LT shall transmit the TST_FRM_00_REQ_PTYPE. 3. The LT shall transmit the TST_FRM_05_REQ_PID_ERRBIT. 4. The UT shall control the IUT not to transmit the TST_FRM_01_REQ_PID and the TST_FRM_10_RESP_0-12. 5. The LT shall retransmit the TST_FRM_00_REQ_PTYPE.
Iteration	Not applicable
Expected response	After step 1: The IUT shall transmit the TST_FRM_01_REQ_PID, the frame information, the Data and the CRC. The LT shall receive the TST_FRM_01_REQ_PID, the frame information, the Data and the CRC and shall report to the UT. After step 3: The IUT shall transmit the TST_FRM_18_RESP_ERRBIT_0-12 with the error bit = FALSE. The LT shall receive the TST_FRM_18_RESP_ERRBIT_0-12 with the error bit = FALSE and shall report to the UT. After step 5: The IUT shall not transmit the TST_FRM_01_REQ_PID. The LT shall not receive the TST_FRM_01_REQ_PID.
Remark	---

7.3.5 2.CTC_2.5 – L_FI_DLC ≠ 1111_2 and frame data verification 1

Table 20 specifies the CTC that verifies the 2.CTC_2.5 – L_FI_DLC ≠ 1111_2 and frame data verification 1.

Table 20 — 2.CTC_2.5 – L_FI_DLC ≠ 1111_2 and frame data verification 1

Item	Content
CTC # – Title	2.CTC_2.5 – L_FI_DLC ≠ 1111_2 and frame data verification 1
Purpose	This CTC verifies that the DLC field for the frame of the L_FI_DLC ≠ 1111_2 complies with the CXPI specification.
Reference	ISO 20794-4:2020: — REQ 0.5 SIP – PDU, protocol data unit; — REQ 0.6 SIP – Length, length of PDU; — REQ 2.9 DLL – L_FI configuration; — REQ 2.10 DLL – L_FI_DLC (data length code); — REQ 2.30 DLL – Function models – DLL – Transmission logic.
Prerequisite	The test system set-up shall be in accordance with Figure 2.

© ISO 2020 – All rights reserved

Documents
Document Sharing Hub
Full document details: BS ISO 20794-7:2020

Table 20 *(continued)*

Item	Content
Set-up	— The IUT shall be configured as a master node or a slave node. — The IUT shall be configured to default configurations (see 6.6.3) and in addition support TST_FRM_01_REQ_PID and TST_FRM_10_RESP_0-12. — The bit rate shall be set to the default value (see 6.6.2). — The SUT shall be initialised to default (see 6.7).
Step	1. The UT shall control the IUT to transmit the TST_FRM_01_REQ_PID and the TST_FRM_10_RESP_0-12 changing the L_FI_DLC with all possible data length values.
Iteration	REPEAT step 1 up to the maximum value of the L_FI_DLC; UT in IUT shall change the L_FI_DLC according to the data length of the test frame; REPEAT END.
Expected response	After step 1: The IUT shall transmit the format of frame information which complies with ISO 20794-4:2020, 8.4.3.1. The IUT shall transmit the correlation between the L_FI_DLC value and the data length (size of the data byte) which complies with ISO 20794-4:2020, 8.4.3.2. The LT shall receive the format of frame information which complies with ISO 20794-4:2020, 8.4.3.1. The LT shall receive the TST_FRM_01_REQ_PID and the TST_FRM_10_RESP_0-12 changing the L_FI_DLC with all possible data length values and shall report to the UT.
Remark	---

7.3.6 2.CTC_2.6 – L_FI_DLC ≠ 1111_2 and frame data verification 2 if DLC is 1101_2 or 1110_2 (Ftype = NormalCom)

Table 21 specifies the CTC that verifies the 2.CTC_2.6 – L_FI_DLC ≠ 1111_2 and frame data verification 2 if DLC is 1101_2 or 1110_2.

Table 21 — 2.CTC_2.6 – L_FI_DLC ≠ 1111_2 and frame data verification 2 if DLC is 1101_2 or 1110_2

Item	Content
CTC # – Title	2.CTC_2.6 – L_FI_DLC ≠ 1111_2 and frame data verification 2 if DLC is 1101_2 or 1110_2
Purpose	This CTC verifies that the DLC field for the frame of L_FI_DLC ≠ 1111_2 complies with the CXPI specification.
Reference	ISO 20794-4:2020: — REQ 2.10 DLL – L_FI_DLC (data length code); — REQ 2.30 DLL – Function models – DLL – Transmission logic; — REQ 2.31 DLL – Function models – DLL – Reception logic.
Prerequisite	The test system set-up shall be in accordance with Figure 2.
Set-up	— The IUT shall be configured as a master node or a slave node. — The IUT shall be configured to L_ErrDet1 configurations (see 6.6.4) and in addition support TST_FRM_01_REQ_PID, TST_FRM_10_RESP_0-12 (only L_Length = $0C_{16}$), TST_FRM_05_REQ_PID_ERRBIT and TST_FRM_16_RESP_ERRBIT_0-12. — The bit rate shall be set to the default value (see 6.6.2). — The SUT shall be initialised to default (see 6.7).

© ISO 2020 – All rights reserved
Documents Document Sharing Hub
Full document details: BS ISO 20794-7:2020

Table 21 *(continued)*

Item	Content
Step	1. The LT shall transmit the TST_FRM_01_REQ_PID and the TST_FRM_10_RESP_0-12 changing the DLC value as specified in Table 22. 2. The LT shall transmit the TST_FRM_05_REQ_PID_ERRBIT.
Iteration	Steps are executed for each test case specified in Table 22; REPEAT step 1 to step 2, 2 times; The LT shall set the L_FI_DLC as specified in Table 22; REPEAT END.
Expected response	After step 1: The IUT shall receive the TST_FRM_10_RESP_0-12 as 12 data bytes regardless of the L_FI_DLC value.
	After step 2: The IUT shall transmit the TST_FRM_16_RESP_ERRBIT_0-12 with the error bit = FALSE. The LT shall receive the TST_FRM_16_RESP_ERRBIT_0-12 with the error bit = FALSE and shall report to the UT.
Remark	---

Table 22 — TC – 2.CTC_2.6 – L_FI_DLC ≠ 1111_2 and frame data verification 2 if DLC is 1101_2 or 1110_2

CTC-DLL-TC	Value of L_FI_DLC
2.CTC_2.6-1	1101_2
2.CTC_2.6-2	1110_2

7.3.7 2.CTC_2.7 – L_FI_DLC = 1111_2/L_FI_DLCext ≥ 0 and frame data verification

Table 23 specifies the CTC that verifies the 2.CTC_2.7 – L_FI_DLC = 1111_2/L_FI_DLCext ≥ 0 and frame data verification.

Table 23 — 2.CTC_2.7 – L_FI_DLC = 1111_2/L_FI_DLCext ≥ 0 and frame data verification

Item	Content
CTC # – Title	2.CTC_2.7 – L_FI_DLC = 1111_2/L_FI_DLCext ≥ 0 and frame data verification
Purpose	This CTC verifies that the DLCext field of the frame of L_FI_DLC ≥ 1111_2 complies with the CXPI specification. This CTC is applicable only to an IUT, which supports the L_FI_DLC = 1111_2.
Reference	ISO 20794-4:2020: — REQ 0.5 SIP – PDU, protocol data unit; — REQ 0.6 SIP – Length, length of PDU; — REQ 2.9 DLL – L_FI configuration; — REQ 2.11 DLL – L_FI_DLCext (data length code extension); — REQ 2.30 DLL – Function models – DLL – Transmission logic.
Prerequisite	The test system set-up shall be in accordance with Figure 2. This test is applicable only to IUTs which support frames of L_FI_DLC = 1111_2.

© ISO 2020 – All rights reserved

Documents
Document Sharing Hub
Full document details: BS ISO 20794-7:2020

Table 23 *(continued)*

Item	Content
Set-up	— The IUT shall be configured as a master node or a slave node. — The IUT shall be configured to default configurations (see 6.6.3) and in addition support TST_FRM_01_REQ_PID and TST_FRM_12_RESP_LONG_0-255. — The bit rate shall be set to the default value (see 6.6.2). — The SUT shall be initialised to default (see 6.7).
Step	1. The UT shall control the IUT to transmit TST_FRM_01_REQ_PID and TST_FRM_12_RESP_LONG_0-255 changing the L_FI_DLCext with all possible data length values.
Iteration	REPEAT step 1 up to the maximum value of the L_FI_DLCext which is supported by the IUT; UT in IUT shall change the L_FI_DLCext value according to the data length of the test frame; REPEAT END.
Expected response	After step 1: The IUT shall transmit the TST_FRM_12_RESP_LONG_0-255 which complies with ISO 20794-4:2020, 8.4.3.3. The IUT shall transmit the L_FI_DLC value = 1111_2. The IUT shall transmit the L_FI_DLCext value which meets the data length size. The LT shall receive the L_FI_DLC value = 1111_2. The LT shall receive the L_FI_DLCext value which meets the data length size and shall report to the UT.
Remark	---

7.3.8 2.CTC_2.8 – Given CRC of frame with L_FI_DLC ≠ 1111_2

Table 24 specifies the CTC that verifies the 2.CTC_2.8 – Given CRC of frame with L_FI_DLC ≠ 1111_2.

Table 24 — 2.CTC_2.8 – Given CRC of frame with L_FI_DLC ≠ 1111_2

Item	Content
CTC # – Title	2.CTC_2.8 – Given CRC of frame with L_FI_DLC ≠ 1111_2
Purpose	This CTC verifies that the CRC field for the L_FI_DLC ≠ 1111_2 frame complies with the CXPI specification.
Reference	ISO 20794-4:2020: — REQ 2.16 DLL – L_CRC field determination; — REQ 2.17 DLL – CRC8 calculation; — REQ 2.30 DLL – Function models – DLL – Transmission logic.
Prerequisite	The test system set-up shall be in accordance with Figure 2.
Set-up	— The IUT shall be configured as a master node or a slave node. — The IUT shall be configured to default configurations (see 6.6.3) and in addition support TST_FRM_01_REQ_PID and TST_FRM_10_RESP_0-12. — The bit rate shall be set to the default value (see 6.6.2). — The SUT shall be initialised to default (see 6.7).
Step	1. The UT shall control the IUT to transmit the TST_FRM_01_REQ_PID and the TST_FRM_10_RESP_0-12 changing the L_FI_DLC.

© ISO 2020 – All rights reserved
Documents
Document Sharing Hub
Full document details: BS ISO 20794-7:2020

Table 24 *(continued)*

Item	Content
Iteration	REPEAT step 1 up to the maximum value of the L_FI_DLC which is supported by the IUT; UT in IUT shall change the L_FI_DLC value according to the data length of the test frame; REPEAT END.
Expected response	After step 1: The IUT shall transmit the CRC8 calculation which complies with ISO 20794-4:2020, 8.4.5.2. The LT shall receive the TST_FRM_01_REQ_PID and the TST_FRM_10_RESP_0-12 changing the L_FI_DLC value with all possible data length values and shall report to the UT.
Remark	---

7.3.9 2.CTC_2.9 – Given CRC of frame with L_FI_DLC = 1111_2/L_FI_DLCext ≥ 0

Table 25 specifies the CTC that verifies the 2.CTC_2.9 – Given CRC of frame with L_FI_DLC = 1111_2/L_FI_DLCext ≥ 0.

Table 25 — 2.CTC_2.9 – Given CRC of frame with L_FI_DLC = 1111_2/L_FI_DLCext ≥ 0

Item	Content
CTC # – Title	2.CTC_2.9 – Given CRC of frame with L_FI_DLC = 1111_2/L_FI_DLCext ≥ 0
Purpose	This CTC verifies that the CRC field for the L_FI_DLCext ≥ 0 frame complies with the CXPI specification. This CTC is applicable only to an IUT, which supports L_FI_DLC = 1111_2.
Reference	ISO 20794-4:2020: — REQ 2.16 DLL – L_CRC field determination; — REQ 2.18 DLL – CRC16 calculation; — REQ 2.30 DLL – Function models – DLL – Transmission logic.
Prerequisite	The test system set-up shall be in accordance with Figure 2. This test is applicable only to IUTs which support frame of L_FI_DLC = 1111_2.
Set-up	— The IUT shall be configured as a master node or a slave node. — The IUT shall be configured to default configurations (see 6.6.3) and in addition support TST_FRM_01_REQ_PID and TST_FRM_12_RESP_LONG_0-255. — The bit rate shall be set to the default value (see 6.6.2). — The SUT shall be initialised to default (see 6.7).
Step	1. The UT shall control the IUT to transmit the TST_FRM_01_REQ_PID and the TST_FRM_12_RESP_LONG_0-255 changing the the L_FI_DLCext value.
Iteration	REPEAT step 1 up to the maximum value of the L_FI_DLCext which is supported by the IUT; UT in IUT shall change the L_FI_DLCext value according to the data length of the test frame; REPEAT END.
Expected response	After step 1: The IUT shall transmit the CRC16 calculation which complies with ISO 20794-4:2020, 8.4.5.3. The LT shall receive the TST_FRM_01_REQ_PID and the TST_FRM_12_RESP_LONG_0-255 changing the L_FI_DLCext value with all possible data length values and shall report to the UT.
Remark	---

© ISO 2020 – All rights reserved

Documents
Document Sharing Hub
Full document details: BS ISO 20794-7:2020

7.3.10 2.CTC_2.10 – Frame transmission completion

Table 26 specifies the CTC that verifies the 2.CTC_2.10 – Frame transmission completion.

Table 26 — 2.CTC_2.10 – Frame transmission completion

Item	Content
CTC # – Title	2.CTC_2.10 – Frame transmission completion
Purpose	This CTC verifies that the completion of transmission frame complies with the CXPI specification.
Reference	ISO 20794-4:2020, REQ 2.28 DLL – Completing condition of frame.
Prerequisite	The test system set-up shall be in accordance with Figure 2.
Set-up	— The IUT shall be configured as a master node or a slave node. — The IUT shall be configured to L_ErrDet2 configurations (see 6.6.5) and in addition support TST_FRM_01_REQ_PID, TST_FRM_10_RESP_0-12, TST_FRM_03_REQ_PID_UNKNOWN, TST_FRM_05_REQ_PID_ERRBIT and TST_FRM_16_RESP_ERRBIT_0-12. — The bit rate shall be set to the default value (see 6.6.2). — The SUT shall be initialised to default (see 6.7).
Step	1. The UT shall control the IUT to transmit the TST_FRM_01_REQ_PID and the TST_FRM_10_RESP_0-12. 2. The LT shall transmit the TST_FRM_03_REQ_PID_UNKNOWN after recognizing IFS of the bit length specified in Table 27 (from the end of transmitted the CRC of the TST_FRM_10_RESP_0-12). 3. The LT shall transmit the TST_FRM_05_REQ_PID_ERRBIT.
Iteration	Steps are executed for each test case specified in Table 27; REPEAT step 1 to 3, 2 times; The LT shall set the IFS as specified in Table 27; REPEAT END.
Expected response	See Table 27.
Remark	---

Table 27 — TC – 2.CTC_2.10 – Frame transmission completion

CTC-DLL-TC	IFS	Judgement criteria
2.CTC_2.10-1	11 bit	After step 6: The IUT shall transmit the TST_FRM_16_RESP_ERRBIT_0-12 with the error bit = FALSE. The LT shall receive the TST_FRM_16_RESP_ERRBIT_0-12 with the error bit = FALSE and shall report to the UT.
2.CTC_2.10-2	9 bit	After Step 6: The IUT shall transmit the TST_FRM_16_RESP_ERRBIT_0-12 with the error bit = TRUE. The LT shall receive the TST_FRM_16_RESP_ERRBIT_0-12 with the error bit = TRUE and shall report to the UT.

7.3.11 2.CTC_2.11 – Frame reception completion

Table 28 specifies the CTC that verifies the 2.CTC_2.11 – Frame reception completion.

© ISO 2020 – All rights reserved
Documents
Document Sharing Hub
Full document details: BS ISO 20794-7:2020

Table 28 — 2.CTC_2.11 – Frame reception completion

Item	Content
CTC # – Title	2.CTC_2.11 – Frame reception completion
Purpose	This CTC verifies that the completion of reception frame complies with the CXPI specification.
Reference	ISO 20794-4:2020, REQ 2.28 DLL – Completing condition of frame.
Prerequisite	The test system set-up shall be in accordance with Figure 2.
Set-up	— The IUT shall be configured as a master node or a slave node. — The IUT shall be configured to L_ErrDet2 configurations (see 6.6.5) and in addition support TST_FRM_01_REQ_PID, TST_FRM_10_RESP_0-12, TST_FRM_03_REQ_PID_UNKNOWN, TST_FRM_05_REQ_PID_ERRBIT and TST_FRM_16_RESP_ERRBIT_0-12. — The bit rate shall be set to the default value (see 6.6.2). — The SUT shall be initialised to default (see 6.7).
Step	1. The LT shall transmit the TST_FRM_01_REQ_PID and the TST_FRM_10_RESP_0-12. 2. The LT shall transmit the TST_FRM_03_REQ_PID_UNKNOWN after recognizing an IFS of the bit length specified in Table 29 (from the end of transmitted CRC of the TST_FRM_10_RESP_0-12). 3. The LT shall transmit the TST_FRM_05_REQ_PID_ERRBIT.
Iteration	Steps are executed for each test case specified in Table 29; REPEAT step 1 to step 3, 2 times; The LT shall set the IFS as specified in Table 29; REPEAT END.
Expected response	See Table 29.
Remark	---

Table 29 — TC – 2.CTC_2.11 – Frame reception completion

CTC-DLL-TC	IFS	Judgement criteria	
CTC_2.11-1	11 bit	After step 2:	The IUT shall receive the same data as transmitted by the test system.
		After step 3:	The IUT shall transmit the TST_FRM_16_RESP_ERRBIT_0-12 with the error bit = FALSE. The LT shall receive the TST_FRM_16_RESP_ERRBIT_0-12 with the error bit = FALSE and shall report to the UT.
2.CTC_2.11-2	9 bit	After step 2:	The IUT shall discard the received frame.
		After step 3:	The IUT shall transmit the TST_FRM_16_RESP_ERRBIT_0-12 with the error bit = TRUE. The LT shall receive the TST_FRM_16_RESP_ERRBIT_0-12 with the error bit = TRUE and shall report to the UT.

7.4 CTP – Network access

7.4.1 2.CTC_3.1 – Arbitration function 1 (arbitration by using carrier sense)

Table 30 specifies the CTC that verifies the 2.CTC_3.1 – Arbitration function 1 (arbitration by using carrier sense).

© ISO 2020 – All rights reserved

Documents
Document Sharing Hub
Full document details: BS ISO 20794-7:2020

Table 30 — 2.CTC_3.1 – Arbitration function 1 (arbitration by using carrier sense)

Item	Content
CTC # – Title	2.CTC_3.1 – Arbitration function 1 (arbitration by using carrier sense)
Purpose	This CTC verifies that the arbitration function of the L_PTYPE field or the L_PID field complies with the CXPI specification.
Reference	ISO 20794-4:2020, REQ 2.29 DLL – Byte arbitration.
Prerequisite	The test system set-up shall be in accordance with Figure 2.
Set-up	— The IUT shall be configured as a master node or a slave node. — The IUT shall be configured to L_Unknown configurations (see 6.6.7) and in addition support TST_FRM_01_REQ_PID, TST_FRM_03_REQ_PID_UNKNOWN and TST_FRM_13_RESP_UNKOWN_0-12. — The bit rate shall be set to the default value (see 6.6.2). — The SUT shall be initialised to default (see 6.7).
Step	1. The LT shall transmit the consecutive TST_FRM_03_REQ_PID_UNKNOWN and the TST_FRM_13_RESP_UNKOWN_0-12 with an 18-bit IFS interval. 2. The UT shall control the IUT to transmit the TST_FRM_01_REQ_PID.
Iteration	Not applicable
Expected response	After step 2: The IUT shall not transmit the TST_FRM_01_REQ_PID. The LT shall not receive the TST_FRM_01_REQ_PID. The IUT shall not corrupt the TST_FRM_03_REQ_PID_UNKNOWN and the TST_FRM_13_RESP_UNKOWN_0-12.
Remark	---

7.4.2 2.CTC_3.2 – Arbitration function 2 (IUT loses arbitration and transitions into receiving state)

Table 31 specifies the CTC that verifies the 2.CTC_3.2 – Arbitration function 2 (IUT loses arbitration and transitions into receiving state).

© ISO 2020 – All rights reserved
Documents
Document Sharing Hub
Full document details: BS ISO 20794-7:2020

Table 31 — 2.CTC_3.2 – Arbitration function 2 (IUT loses arbitration and transitions into receiving state)

Item	Content
CTC # – Title	2.CTC_3.2 – Arbitration function 2 (IUT loses arbitration and transitions into receiving state)
Purpose	This CTC verifies that the IUT as receiving node complies with the CXPI specification after losing arbitration.
Reference	ISO 20794-4:2020, REQ 2.29 DLL – Byte arbitration.
Prerequisite	The test system set-up shall be in accordance with Figure 2.
Set-up	— The IUT shall be configured as a master node or a slave node. — The IUT shall be configured to L_Arbit configurations (see 6.6.6) and in addition support TST_FRM_01_REQ_PID, TST_FRM_10_RESP_0-12, TST_FRM_05_REQ_PID_ERRBIT and TST_FRM_16_RESP_ERRBIT_0-12. — The bit rate shall be set to the default value (see 6.6.2). — The SUT shall be initialised to default (see 6.7).
Step	1. The UT shall control the IUT to transmit the TST_FRM_01_REQ_PID. 2. The LT shall transmit the TST_FRM_01_REQ_PID with the higher priority than IUT and the TST_FRM_10_RESP_0-12 to generate arbitration lost on IUT. 3. The LT shall transmit the TST_FRM_05_REQ_PID_ERRBIT.
Iteration	Not applicable
Expected response	After step 2: The IUT shall receive the same data that the LT transmits. After step 3: The IUT shall transmit the TST_FRM_16_RESP_ERRBIT_0-12 with the error bit = FALSE. The LT shall receive the TST_FRM_16_RESP_ERRBIT_0-12 with the error bit = FALSE and shall report to the UT.
Remark	---

7.5 CTP – Error detection

7.5.1 2.CTC_4.1 – Byte error

Table 32 specifies the CTC that verifies the 2.CTC_4.1 – Byte error.

Table 32 — 2.CTC_4.1 – Byte error

Item	Content
CTC # – Title	2.CTC_4.1 – Byte error
Purpose	This CTC verifies that the detection function of the byte error complies with the CXPI specification.
Reference	ISO 20794-4:2020: — REQ 0.11 SIP – Result, result; — REQ 2.32 DLL – Byte error (Err_DLL_Byte).
Prerequisite	The test system set-up shall be in accordance with Figure 2.

© ISO 2020 – All rights reserved

Documents
Document Sharing Hub
Full document details: BS ISO 20794-7:2020

Table 32 *(continued)*

Item	Content
Set-up	— The IUT shall be configured as a master node or a slave node. — The IUT shall be configured to L_ErrDet1 configurations (see 6.6.4) and in addition support TST_FRM_00_REQ_PTYPE, TST_FRM_01_REQ_PID and TST_FRM_10_RESP_0-12, TST_FRM_05_REQ_PID_ERRBIT and TST_FRM_16_RESP_ERRBIT_0-12. — The bit rate shall be set to the default value (see 6.6.2). — The SUT shall be initialised to default (see 6.7).
Step	1. The UT shall control the IUT to transmit the TST_FRM_00_REQ_PTYPE (see remark 1), the TST_FRM_01_REQ_PID and the TST_FRM_10_RESP_0-12. 2. The LT shall invert any bit in the TST_FRM_00_REQ_PTYPE (see remark 1), the TST_FRM_01_REQ_PID and the TST_FRM_10_RESP_0-12 transmitted by the IUT according to Table 33 (refer to remark 2). 3. The LT shall transmit the TST_FRM_05_REQ_PID_ERRBIT.
Iteration	Steps are executed for each test case specified in Table 33; REPEAT step 1 to step 3, 21 times; The LT shall set the IBS as specified in Table 33; REPEAT END.
Expected response	After step 2: The IUT shall stop the transmission from the point where a byte error is detected for each test case. The LT shall not receive the TST_FRM_10_RESP_0-12. After step 3: The IUT shall transmit the TST_FRM_16_RESP_ERRBIT_0-12 with the error bit = TRUE. The LT shall receive the TST_FRM_16_RESP_ERRBIT_0-12 with the error bit = TRUE and shall report to the UT.
Remark	1. The TST_FRM_00_REQ_PTYPE is only applicable to the IUTs which support polling method. 2. Step 2 shall be executed with step 1 cooperated with the IUT.

Table 33 — TC – 2.CTC_4.1 – Byte error

CTC-DLL-TC	Response field coverage	Bit position to be inverted[a]	IBS length
2.CTC_4.1-1	L_PID field or L_PTYPE field	Start bit	---
2.CTC_4.1-2	L_PID field or L_PTYPE field	Stop bit	---
2.CTC_4.1-3	IBS between L_PID field and L_FI_field	Bit 1	≥1 bit
2.CTC_4.1-4	L_FI_field	Start bit	---
2.CTC_4.1-5	L_FI_field	Bit 2	---
2.CTC_4.1-6	L_FI_field	Bit 4	---
2.CTC_4.1-7	L_FI_field	Bit 6	---
2.CTC_4.1-8	L_FI_field	Stop bit	---
2.CTC_4.1-9	IBS between L_FI_field and L_DATA 1	Bit 1	≥1 bit
2.CTC_4.1-10	L_DATA 1	Start bit	---
2.CTC_4.1-11	L_DATA 1	Bit 0	---
2.CTC_4.1-12	L_DATA 1	Bit 1	---
2.CTC_4.1-13	L_DATA 1	Bit 2	---

[a] The IBS and IFS bit counting is started at the stop bit of the previous data byte.

[b] The DATA N is the last data byte of the TST_FRM_10_RESP_0-12.

© ISO 2020 – All rights reserved
Documents
Document Sharing Hub
Full document details: BS ISO 20794-7:2020