BS ISO 20816-1:2016

BSI Standards Publication

Mechanical vibration — Measurement and evaluation of machine vibration

Part 1: General guidelines

Documents
Document Sharing Hub

Full document details: BS ISO 20816-1:2016

National foreword

This British Standard is the UK implementation of ISO 20816-1:2016. It supersedes BS ISO 7919-1:1996 and BS ISO 10816-1:1995+A1:2009 which are withdrawn.

The UK participation in its preparation was entrusted to Technical Committee GME/21/5, Mechanical vibration, shock and condition monitoring - Vibration of machines.

A list of organizations represented on this committee can be obtained on request to its secretary.

This publication does not purport to include all the necessary provisions of a contract. Users are responsible for its correct application.

© The British Standards Institution 2016.
Published by BSI Standards Limited 2016

ISBN 978 0 580 91384 6

ICS 17.160

Compliance with a British Standard cannot confer immunity from legal obligations.

This British Standard was published under the authority of the Standards Policy and Strategy Committee on 30 November 2016.

Amendments/corrigenda issued since publication

Date	Text affected

Documents
Document Sharing Hub

Full document details: BS ISO 20816-1:2016

INTERNATIONAL STANDARD

ISO 20816-1

First edition
2016-11-15

Mechanical vibration — Measurement and evaluation of machine vibration —

Part 1: General guidelines

Vibrations mécaniques — Mesurage et évaluation des vibrations de machines —

Partie 1: Lignes directrices générales

Reference number
ISO 20816-1:2016(E)

Documents
Document Sharing Hub
© ISO 2016

Full document details: BS ISO 20816-1:2016

COPYRIGHT PROTECTED DOCUMENT

© ISO 2016, Published in Switzerland

All rights reserved. Unless otherwise specified, no part of this publication may be reproduced or utilized otherwise in any form or by any means, electronic or mechanical, including photocopying, or posting on the internet or an intranet, without prior written permission. Permission can be requested from either ISO at the address below or ISO's member body in the country of the requester.

ISO copyright office
Ch. de Blandonnet 8 • CP 401
CH-1214 Vernier, Geneva, Switzerland
Tel. +41 22 749 01 11
Fax +41 22 749 09 47
copyright@iso.org
www.iso.org

© ISO 2016 – All rights reserved

Documents
Document Sharing Hub

Full document details: BS ISO 20816-1:2016

Contents

Page

Foreword ... **v**
Introduction ... **vi**
1 Scope ... **1**
2 Normative references ... **1**
3 Terms and definitions ... **1**
4 Measurements ... **2**
4.1 General ... 2
4.1.1 Overview ... 2
4.1.2 Vibration measurements ... 2
4.1.3 Frequency range ... 2
4.2 Types of measurements ... 2
4.2.1 Vibration measurements on non-rotating parts ... 2
4.2.2 Relative shaft vibration measurements ... 2
4.2.3 Absolute shaft vibration measurements ... 3
4.3 Measurement parameters ... 3
4.3.1 Measurement quantities ... 3
4.3.2 Vibration magnitude ... 4
4.3.3 Vibration severity ... 4
4.4 Measuring positions ... 4
4.4.1 Positions for measurements on non-rotating parts ... 4
4.4.2 Positions for measurements on rotating shafts ... 7
4.5 Machine support structure for acceptance testing ... 9
4.5.1 General ... 9
4.5.2 In-situ tests ... 9
4.5.3 In a test facility ... 10
4.6 Machine operating conditions ... 10
4.7 Evaluation of vibration from other sources ... 10
5 Instrumentation ... **10**
6 Evaluation criteria ... **11**
6.1 General ... 11
6.1.1 Overview ... 11
6.1.2 Types of measurement on rotating shafts ... 11
6.2 Factors affecting evaluation criteria ... 12
6.3 Types of evaluation criteria ... 12
6.3.1 General ... 12
6.3.2 Criterion I: Vibration magnitude at rated speed under steady operation conditions ... 12
6.3.3 Criterion II: Change in vibration magnitude ... 16
6.4 Operational limits ... 16
6.4.1 General ... 16
6.4.2 Setting of ALARMS ... 17
6.4.3 Setting of TRIPS ... 17
6.5 Additional factors ... 17
6.5.1 Vibration frequencies and vectors ... 17
6.5.2 Vibration sensitivity of the machine ... 17
6.5.3 Techniques for rolling element bearings ... 18
Annex A (informative) **Explanation of measurement quantities** ... **19**
Annex B (informative) **Techniques for detection of problems in rolling element bearings** ... **26**
Annex C (informative) **Guidelines for specification of evaluation criteria for vibration measured on non-rotating parts and rotating shafts** ... **28**

Documents
Document Sharing Hub

© ISO 2016 – All rights reserved

Full document details: BS ISO 20816-1:2016

Annex D (informative) **Vector analysis of change in vibration** **31**
Bibliography **33**

© ISO 2016 – All rights reserved
Documents
Document Sharing Hub
Full document details: BS ISO 20816-1:2016

Foreword

ISO (the International Organization for Standardization) is a worldwide federation of national standards bodies (ISO member bodies). The work of preparing International Standards is normally carried out through ISO technical committees. Each member body interested in a subject for which a technical committee has been established has the right to be represented on that committee. International organizations, governmental and non-governmental, in liaison with ISO, also take part in the work. ISO collaborates closely with the International Electrotechnical Commission (IEC) on all matters of electrotechnical standardization.

The procedures used to develop this document and those intended for its further maintenance are described in the ISO/IEC Directives, Part 1. In particular the different approval criteria needed for the different types of ISO documents should be noted. This document was drafted in accordance with the editorial rules of the ISO/IEC Directives, Part 2 (see www.iso.org/directives).

Attention is drawn to the possibility that some of the elements of this document may be the subject of patent rights. ISO shall not be held responsible for identifying any or all such patent rights. Details of any patent rights identified during the development of the document will be in the Introduction and/or on the ISO list of patent declarations received (see www.iso.org/patents).

Any trade name used in this document is information given for the convenience of users and does not constitute an endorsement.

For an explanation on the meaning of ISO specific terms and expressions related to conformity assessment, as well as information about ISO's adherence to the World Trade Organization (WTO) principles in the Technical Barriers to Trade (TBT) see the following URL: www.iso.org/iso/foreword.html.

The committee responsible for this document is ISO/TC 108, *Mechanical vibration, shock and condition monitoring*, Subcommittee SC 2, *Measurement and evaluation of mechanical vibration and shock as applied to machines, vehicles and structures*.

This first edition of ISO 20816-1 cancels and replaces ISO 7919-1:1996, ISO 10816-1:1995 and ISO 10816-1:1995/Amd 1:2009 which have been merged and editorially revised.

A list of all parts in the ISO 20816 series can be found on the ISO website.

© ISO 2016 – All rights reserved

Documents
Document Sharing Hub
Full document details: BS ISO 20816-1:2016

Introduction

Machines are now being operated at increasingly high rotational speeds and loads, as well as more flexible operation at part and full load, and under increasingly severe operating conditions. This has become possible, to a large extent, by the more efficient use of materials, although this has sometimes resulted in there being less margin for design and application errors.

At present, it is not uncommon for continuous operation to be expected and required for 2 years or 3 years between maintenance operations. Consequently, more restrictive requirements are being specified for operating vibration values of rotating machinery, in order to ensure continued safe and reliable operation.

This document is a basic document which establishes general guidelines for the measurement and evaluation of mechanical vibration of machinery, as measured on rotating and on non-rotating (and, where applicable, non-reciprocating) parts of complete machines, such as shafts or bearing housings. Recommendations for measurements and evaluation criteria pertaining to specific machine types are provided in additional parts of ISO 20816 as they become available as a replacement of the relevant parts of ISO 7919 and ISO 10816. ISO/TR 19201 gives an overview over these and further machinery vibration standards.

For some machines, measurements made on non-rotating parts are sufficient to characterize adequately their running conditions with respect to trouble-free operation. There are also types of machine, such as steam turbines, gas turbines and turbo compressors, all of which can have several modes of vibration in the service speed range, for which measurements on structural members, such as the bearing housings, might not adequately characterize the running condition of the machine, although such measurements are useful. Such machines generally contain flexible rotor shaft systems, and changes in the vibration condition can be detected more decisively and more sensitively by measurements on the rotating elements. Machines having relatively stiff and/or heavy casings in comparison to rotor mass are typical of those classes of machines for which shaft vibration measurements are frequently preferred.

Vibration measurements are used for a number of purposes, ranging from routine operational monitoring and acceptance tests to advanced experimental testing, as well as diagnostic and analytical investigations. These various measurement objectives lead to many differences in methods of interpretation and evaluation. To limit the number of these differences, this document is designed to provide guidelines primarily for operational monitoring and acceptance tests.

Three primary vibration quantities (displacement, velocity and acceleration) are defined and their limitations given. Adherence to the guidelines presented should, in most cases, ensure satisfactory service performance.

© ISO 2016 – All rights reserved
Documents
Document Sharing Hub
Full document details: BS ISO 20816-1:2016

INTERNATIONAL STANDARD ISO 20816-1:2016(E)

Mechanical vibration — Measurement and evaluation of machine vibration —

Part 1: General guidelines

1 Scope

This document establishes general conditions and procedures for the measurement and evaluation of vibration using measurements made on rotating, non-rotating and non-reciprocating parts of complete machines. It is applicable to measurements of both absolute and relative radial shaft vibration with regard to the monitoring of radial clearances, but excludes axial shaft vibration. The general evaluation criteria, which are presented in terms of both vibration magnitude and change of vibration, relate to both operational monitoring and acceptance testing. They have been provided primarily with regard to securing reliable, safe, long-term operation of the machine while minimizing adverse effects on associated equipment. Guidelines are also presented for setting operational limits.

NOTE 1 The evaluation criteria for different classes of machinery will be included in other parts of ISO 20816 when they become available. In the meantime, guidelines are given in Clause 6.

NOTE 2 The term "shaft vibration" is used throughout ISO 20816 because, in most cases, measurements are made on machine shafts. However, the ISO 20816 series is also applicable to measurements made on other rotating elements if such elements are found to be more suitable, provided that the guidelines are respected.

For the purposes of ISO 20816, operational monitoring is considered to be those vibration measurements made during the normal operation of a machine. The ISO 20816 series permits the use of different measurement quantities and methods, provided that they are well-defined and their limitations are set out, so that the interpretation of the measurements is well-understood.

The evaluation criteria relate only to the vibration produced by the machine itself and not the vibration transmitted to it from outside.

This document does not include consideration of torsional vibration.

NOTE 3 For torsional vibration, see, for example, ISO 3046-5, ISO 22266-1 or VDI 2039.

2 Normative references

The following documents are referred to in the text in such a way that some or all of their content constitutes requirements of this document. For dated references, only the edition cited applies. For undated references, the latest edition of the referenced document (including any amendments) applies.

ISO 2954, *Mechanical vibration of rotating and reciprocating machinery — Requirements for instruments for measuring vibration severity*

ISO 5348, *Mechanical vibration and shock — Mechanical mounting of accelerometers*

ISO 10817-1, *Rotating shaft vibration measuring systems — Part 1: Relative and absolute sensing of radial vibration*

3 Terms and definitions

No terms and definitions are listed in this document.

© ISO 2016 – All rights reserved

Documents
Document Sharing Hub
Full document details: BS ISO 20816-1:2016

ISO and IEC maintain terminological databases for use in standardization at the following addresses:

— IEC Electropedia: available at http://www.electropedia.org/

— ISO Online browsing platform: available at http://www.iso.org/obp

4 Measurements

4.1 General

4.1.1 Overview

This clause describes the measurements, procedures and operating conditions recommended for assessing machine vibration. The guidelines given permit the evaluation of vibration in accordance with the general criteria and principles given in Clause 6.

4.1.2 Vibration measurements

It is common practice to measure vibration on non-rotating parts or to measure relative shaft vibration, or both. The measurement type for the protection system is normally based on the experience from the machine manufacturer.

4.1.3 Frequency range

The measurement of vibration shall be broad band, so that the frequency spectrum of the machine is adequately covered.

The frequency range depends on the type of machine being considered (e.g. the frequency range necessary to assess the integrity of rolling element bearings should include frequencies higher than those on machines with fluid-film bearings only).

Guidelines for instrumentation frequency ranges for specific machine classes are given in the appropriate parts of ISO 20816.

NOTE 1 In the past, broad-band measurements in the range 10 Hz to 1 000 Hz were the intended metric for full-load acceptance testing. This might not meet the requirements of a condition monitoring scheme and might need to be modified for the purposes of vibration monitoring and diagnostics.

NOTE 2 Vibration condition monitoring and diagnostics of machines are described in ISO 13373.

On certain equipment, e.g. gearboxes and rolling element bearings, it can be appropriate to use a different frequency range for acceptance purposes.

4.2 Types of measurements

4.2.1 Vibration measurements on non-rotating parts

Vibration measurements on non-rotating parts are generally carried out with a seismic transducer which senses the absolute velocity or acceleration of structure parts on which it is mounted (e.g. the bearing housing).

4.2.2 Relative shaft vibration measurements

Relative shaft vibration measurements are generally carried out with a non-contacting transducer which senses the vibratory displacement between the shaft and a structural member on which it is mounted (e.g. the bearing housing).

© ISO 2016 – All rights reserved
Documents
Document Sharing Hub
Full document details: BS ISO 20816-1:2016

4.2.3 Absolute shaft vibration measurements

Absolute shaft vibration measurements are carried out by one of the following methods:

a) by a shaft-riding probe on which a seismic transducer (velocity type or accelerometer) is mounted so that it measures absolute shaft vibration directly;

b) by a non-contacting transducer which measures relative shaft vibration in combination with a seismic transducer (velocity type or accelerometer) which measures the support vibration. Both transducers shall be mounted close together so that they undergo the same absolute motion in the direction of measurement. Their conditioned outputs are summed to provide a measurement of the absolute shaft motion.

NOTE In order to avoid incorrect results, it is important to ensure that the same datum time reference be used for the outputs from both the seismic and non-contacting transducers.

4.3 Measurement parameters

4.3.1 Measurement quantities

For the purposes of this document, the following measurement quantities can be used:

a) vibration displacement, measured in micrometres;

b) vibration velocity, measured in millimetres per second;

c) vibration acceleration, measured in metres per square second.

The use, application and limitations of these quantities are discussed in Clause 6.

Generally, there is no simple relationship between broad-band acceleration, velocity and displacement; nor is there between peak (0–p), peak-to-peak (p–p), root-mean-square (r.m.s.) and average values of vibration. The reasons for this are briefly discussed in A.1, which also defines some precise relationships between the above quantities when the harmonic content of the vibration waveform is known.

In order to avoid confusion and to ensure correct interpretation, it is important at all times to identify clearly the measurement quantity and its unit, e.g. peak-to-peak displacement in µm (1 µm = 10^{-6} m), r.m.s. velocity in mm/s.

NOTE Vibration is a vector quantity and therefore, when comparing two different values, it can be necessary to consider the phase angle between them (see Annex D).

Generally, it can be stated that the preferred measurement quantity for the measurement of vibration of non-rotating parts is r.m.s. velocity while the preferred measurement quantity for the measurement of shaft vibration is peak-to-peak displacement.

Since this document applies to both relative and absolute shaft vibration measurements, displacement is further defined as follows:

— relative displacement which is the vibratory displacement of the shaft with reference to support structure, such as a bearing housing or machine casing;

— absolute displacement which is the vibratory displacement of the shaft with reference to an inertial reference system.

It should be clearly indicated whether displacement values are relative or absolute.

Relative and absolute displacements are further defined by several different displacement quantities, each of which is now in widespread use. These include the following:

© ISO 2016 – All rights reserved

Documents
Document Sharing Hub
Full document details: BS ISO 20816-1:2016

S_{max} maximum vibratory displacement in the plane of measurement, measured from time-integrated mean position, see Formula (A.10);

$S_{(p-p)}$ peak-to-peak vibratory displacement in the direction of measurement defined as $S_{(p-p)} = \max [S_{A(p-p)}, S_{B(p-p)}]$;

$S_{(p-p)max}$ maximum peak-to-peak vibratory displacement in the plane of measurement.

Any of these displacement quantities may be used for the measurement of shaft vibration. However, the quantities shall be clearly identified so as to ensure correct interpretation of the measurements in terms of the criteria of Clause 6. The relationships between these quantities are shown in Figure A.3.

4.3.2 Vibration magnitude

The result of measurements made with an instrument which complies with the requirements of Clause 5 is called the vibration magnitude at a specific measuring position and direction.

It is common practice, based on experience, when evaluating broad-band vibration of rotating machinery to consider the r.m.s. value of vibration velocity, since this can be related to the vibration energy. However, other quantities such as displacement or acceleration and peak values instead of r.m.s. values may be preferred. In this case, alternative criteria, which are not necessarily simply related to criteria based on r.m.s. values, are required.

For shaft vibration measurement, it is common practice to consider peak-to-peak values.

4.3.3 Vibration severity

Normally, measurements are made at various measuring positions and in one, two or three measuring directions, leading to a set of different vibration magnitude values. The maximum broad-band magnitude value measured under agreed machine support and operating conditions is defined as the vibration severity.

For most machine types, one value of vibration severity characterizes the vibratory state of that machine. However, for some machines, this approach can be inadequate and the vibration severity should then be assessed independently for measurement positions at a number of locations.

4.4 Measuring positions

4.4.1 Positions for measurements on non-rotating parts

Measurements on non-rotating parts should be taken on the bearings, bearing support housing or other structural parts which significantly respond to the dynamic forces transmitted from the rotating elements at the bearing locations and characterize the overall vibration of the machine. Typical measurement locations are shown in Figure 1 to Figure 5.

To determine the vibrational behaviour at each measuring position, it is necessary to take measurements in three mutually perpendicular directions. The full complement of measurements represented in Figure 1 to Figure 5 is generally only required for acceptance testing.

The requirement for operational monitoring is usually met by performing one or both measurements in the radial direction (i.e. normally in the horizontal transverse and/or vertical directions). These can be supplemented by a measurement of the vibration in the axial direction, but are to be evaluated only on thrust bearings. The latter can be of significance at thrust bearing locations where direct axial dynamic forces are transmitted.

Detailed recommendations for specific machine types are provided in the additional parts of ISO 20816.

© ISO 2016 – All rights reserved
Documents
Document Sharing Hub
Full document details: BS ISO 20816-1:2016

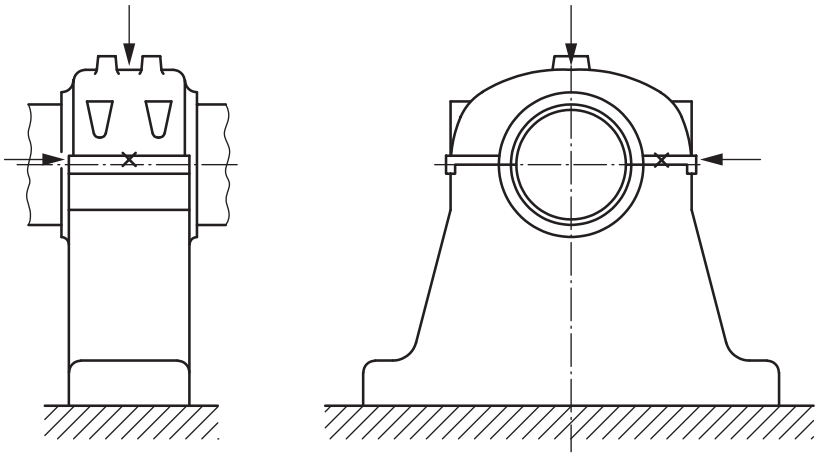

Figure 1 — Measuring points for pedestal bearings

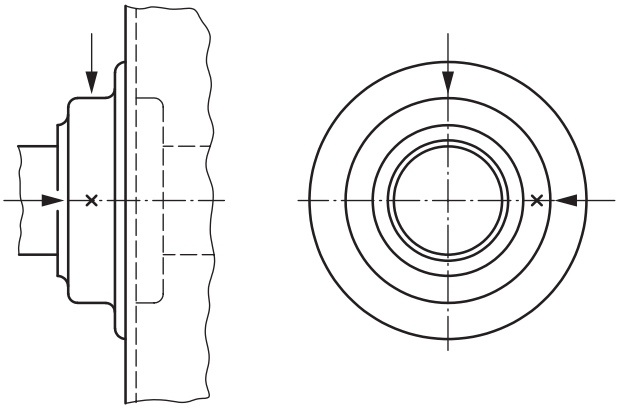

Figure 2 — Measuring points for housing-type bearings

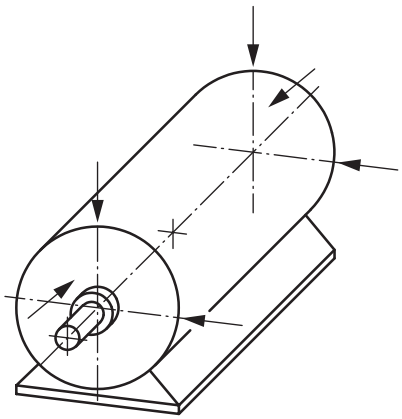

Figure 3 — Measuring points for small electrical machines

© ISO 2016 – All rights reserved

Documents
Document Sharing Hub
Full document details: BS ISO 20816-1:2016

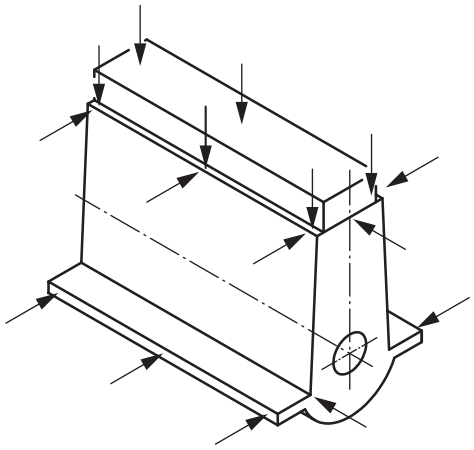

Figure 4 — Measuring points for reciprocating engines close to the bearing locations

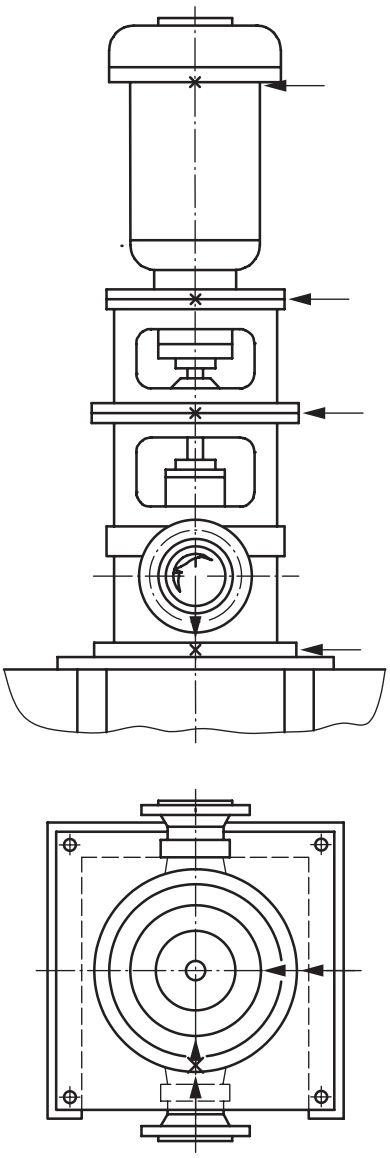

Figure 5 — Measuring points for vertical machine sets

© ISO 2016 – All rights reserved
Documents
Document Sharing Hub
Full document details: BS ISO 20816-1:2016