BS ISO 21051:2020

BSI Standards Publication

Construction and installation of ductile iron pipeline system

Documents
Document Sharing Hub

Full document details: BS ISO 21051:2020

National foreword

This British Standard is the UK implementation of ISO 21051:2020.

The UK participation in its preparation was entrusted to Technical Committee PSE/10, Iron pipes and fittings.

A list of organizations represented on this committee can be obtained on request to its committee manager.

This publication does not purport to include all the necessary provisions of a contract. Users are responsible for its correct application.

© The British Standards Institution 2020
Published by BSI Standards Limited 2020

ISBN 978 0 580 98892 9

ICS 23.040.10

Compliance with a British Standard cannot confer immunity from legal obligations.

This British Standard was published under the authority of the Standards Policy and Strategy Committee on 30 November 2020.

Amendments/corrigenda issued since publication

Date	Text affected

Documents
Document Sharing Hub

Full document details: BS ISO 21051:2020

INTERNATIONAL STANDARD

ISO 21051

First edition
2020-11-19

Construction and installation of ductile iron pipeline system

Reference number
ISO 21051:2020(E)

Documents
Document Sharing Hub
© ISO 2020

Full document details: BS ISO 21051:2020

COPYRIGHT PROTECTED DOCUMENT

© ISO 2020, Published in Switzerland

All rights reserved. Unless otherwise specified, no part of this publication may be reproduced or utilized otherwise in any form or by any means, electronic or mechanical, including photocopying, or posting on the internet or an intranet, without prior written permission. Permission can be requested from either ISO at the address below or ISO's member body in the country of the requester.

ISO copyright office
Ch. de Blandonnet 8 • CP 401
CH-1214 Vernier, Geneva, Switzerland
Tel. +41 22 749 01 11
Fax +41 22 749 09 47
copyright@iso.org
www.iso.org

© ISO 2020 – All rights reserved

Documents
Document Sharing Hub

Full document details: BS ISO 21051:2020

Contents

Page

Foreword ..... **v**

1 Scope **1**

2 Normative references **1**

3 Terms and definitions **1**

4 Occupational safety and health requirements **2**

5 Materials in contact with water intended for human consumption **2**

6 Input control, transport, handling and storage of pipeline components and inspection **3**
6.1 Input control 3
6.2 Transport, handling and storage and inspection of pipeline components 3
6.2.1 Transport 3
6.2.2 Handling 3
6.2.3 Storage 5
6.2.4 Inspection 9

7 Coating and lining repairs **9**
7.1 General 9
7.2 Repair external coating 9
7.2.1 General 9
7.2.2 Repair procedure 9
7.3 Repair cement mortar lining 10
7.3.1 General 10
7.3.2 Repair procedure cement mortar lining 10

8 Cutting of pipes and ovality correction **10**
8.1 Cutting of pipes 10
8.1.1 General 10
8.1.2 Pipe cutting tools 11
8.1.3 Chamfering of cut edge 11
8.1.4 Repair of damaged lining and coating 11
8.2 Ovality correction 11

9 Site preparation and pipe trenches **14**
9.1 Trench width 14
9.2 Trench excavation and minimum depth of cover 14
9.2.1 General 14
9.2.2 Minimum depth of cover 14
9.2.3 Regulations 14

10 Pipeline protection **15**
10.1 General 15
10.2 Site applied polyethyelene sleeving 15

11 Laying of pipes **15**
11.1 Precautions at site before laying 15
11.1.1 General 15
11.1.2 Preparation before pipe laying and jointing 15
11.2 Construction of pipe trenches 16
11.2.1 General 16
11.2.2 Bedding 16
11.2.3 Trench types 17
11.2.4 Soil types 19
11.3 Safety, protection of property and structures 20

12 Push-in joints, jointing and anchoring **20**
12.1 Preparations before jointing 20

Documents
Document Sharing Hub

© ISO 2020 – All rights reserved

Full document details: BS ISO 21051:2020

12.2 Push-in joints ... 20
12.2.1 General ... 20
12.2.2 Push-in joint assembly for the pipes ... 21
12.2.3 Jointing of push-on fittings ... 27
12.2.4 Jointing of fittings by jointing tackle (assembler) ... 27
12.2.5 Jointing of fittings by winch method ... 28
12.2.6 Maximum joint deflection and laying length ... 28
12.2.7 Inspection of the joint ... 29
12.2.8 Dismantling of Joint ... 30
12.3 Mechanical joints ... 30
12.3.1 General ... 30
12.3.2 Mechanical joint assembly for pipes ... 31
12.4 Flanged Joints ... 33
12.4.1 General ... 33
12.4.2 Flange bolting tightening sequence ... 33
12.4.3 Maximum bolt tightening torque ... 34

13 Functional features and installation of valves ... 35
13.1 Installation of valves ... 35
13.1.1 General ... 35
13.1.2 Air valves ... 35
13.1.3 Scour valves or drain valves ... 36
13.1.4 Isolation valves ... 36
13.1.5 Hydrants ... 37
13.1.6 Surge limiting equipment ... 37

14 Restrained joints and thrust blocks ... 37

15 Cleaning, hydraulic testing and commissioning of pipeline and pipeline components ... 37
15.1 Cleaning ... 37
15.2 Hydraulic testing ... 38

16 Flushing and disinfection ... 38

17 Service connections ... 38
17.1 General ... 38
17.2 Conventional type service connection ... 39
17.3 External seal type connection ... 39
17.4 Saddle for ductile iron pipes for distribution network ... 40

18 Supporting pipes ... 41
18.1 General ... 41
18.2 Support for above ground installation ... 41
18.3 Maximum span for river crossing ... 41
18.4 Laying of ductile iron (DI) pipes in hilly terrain ... 42
18.4.1 General ... 42
18.4.2 Pipe line anchoring on slope ... 42
18.4.3 Basic precaution during trenching and bed preparation for pipes on slope ... 44
18.4.4 Additional precautions during laying in a hilly and rocky terrain ... 45
18.4.5 Precaution in snow bound areas ... 46

19 Railroad and highway crossings ... 47

Annex A (normative) **Site applied polyethylene sleeving ... 48**

Bibliography ... 57

© ISO 2020 – All rights reserved
Documents
Document Sharing Hub
Full document details: BS ISO 21051:2020

Foreword

ISO (the International Organization for Standardization) is a worldwide federation of national standards bodies (ISO member bodies). The work of preparing International Standards is normally carried out through ISO technical committees. Each member body interested in a subject for which a technical committee has been established has the right to be represented on that committee. International organizations, governmental and non-governmental, in liaison with ISO, also take part in the work. ISO collaborates closely with the International Electrotechnical Commission (IEC) on all matters of electrotechnical standardization.

The procedures used to develop this document and those intended for its further maintenance are described in the ISO/IEC Directives, Part 1. In particular, the different approval criteria needed for the different types of ISO documents should be noted. This document was drafted in accordance with the editorial rules of the ISO/IEC Directives, Part 2 (see www.iso.org/directives).

Attention is drawn to the possibility that some of the elements of this document may be the subject of patent rights. ISO shall not be held responsible for identifying any or all such patent rights. Details of any patent rights identified during the development of the document will be in the Introduction and/or on the ISO list of patent declarations received (see www.iso.org/patents).

Any trade name used in this document is information given for the convenience of users and does not constitute an endorsement.

For an explanation of the voluntary nature of standards, the meaning of ISO specific terms and expressions related to conformity assessment, as well as information about ISO's adherence to the World Trade Organization (WTO) principles in the Technical Barriers to Trade (TBT) see www.iso.org/iso/foreword.html.

This document was prepared by Technical Committee ISO/TC 5, *Ferrous metal pipes and metallic fittings*, Subcommittee SC 2, *Cast iron pipes, fittings and their joints*.

Any feedback or questions on this document should be directed to the user's national standards body. A complete listing of these bodies can be found at www.iso.org/members.html.

© ISO 2020 – All rights reserved

Documents
Document Sharing Hub
Full document details: BS ISO 21051:2020

This page deliberately left blank

Documents
Document Sharing Hub

Full document details: BS ISO 21051:2020

INTERNATIONAL STANDARD ISO 21051:2020

Construction and installation of ductile iron pipeline system

1 Scope

This document specifies the recommended practices and requirements for the installation of buried and above-ground ductile iron pipeline system conforming to ISO 2531, ISO 7186 and ISO 16631.

The recommended practices in this document are intended to provide the practical advices based on the best methods of construction and installation of ductile iron pipeline system including pipes, fittings, valves and accessories.

2 Normative references

The following documents are referred to in the text in such a way that some or all of their content constitutes requirements of this document. For dated references, only the edition cited applies. For undated references, the latest edition of the referenced document (including any amendments) applies.

ISO 2531:2009, *Ductile iron pipes, fittings, accessories and their joints for water applications*

ISO 4179:2005, *Ductile iron pipes and fittings for pressure and non-pressure pipelines — Cement mortar lining*

ISO 8179-1:2017, *Ductile iron pipes, fittings, accessories and their joints — External zinc-based coating — Part 1: Metallic zinc with finishing layer*

ISO 8180, *Ductile iron pipes — polyethylene sleeving for site application*

ISO 10802, *Ductile iron pipelines — Hydrostatic testing after installation*

3 Terms and definitions

For the purposes of this document, the terms and definitions given in ISO 2531 and the following apply.

ISO and IEC maintain terminological databases for use in standardization at the following addresses:

— ISO Online browsing platform: available at https://www.iso.org/obp

— IEC Electropedia: available at http://www.electropedia.org/

3.1
system test pressure
STP
hydrostatic pressure applied to newly laid pipeline in order to ensure its integrity and leak tightness, based on project requirements of working pressure and the surge pressure

Note 1 to entry: The system test pressure (Clause 14) shall never exceed the maximum allowable site test pressure of each component of the pipeline i.e. pipes, *valves* (3.8), fittings and other accessories.

3.2
gravity system
system where flow and/or pressure are caused by the force of gravity.

Note 1 to entry: There are two kinds of such systems:

— pressurized gravity system, where the pipeline operates full;

© ISO 2020 – All rights reserved

Documents
Document Sharing Hub
Full document details: BS ISO 21051:2020

— non-pressured gravity system, where the pipeline operates partially full.

Note 2 to entry: See 13.1.6.

3.3
local main
water main which connects *principal main(s)* (3.4) with *service pipes* (3.6)

Note 1 to entry: See 13.1.4.

3.4
principal main
water main serving as a principal distributor within the supply area, normally without direct consumer connections

Note 1 to entry: See 13.1.4.

3.5
pumped or gravity system
system where the *gravity system* (3.2) and the pumped system are used, either separately or in combination, to provide the flow and/or pressure

3.6
service pipe
water pipe which supplies water from the *local main* (3.3) to the consumer

3.7
trunk main
water main which interconnects source(s), treatment works, reservoir(s) and/or supply areas, normally without direct consumer connection(s)

Note 1 to entry: See 13.1.4.

3.8
valve
component isolating or controlling flow and pressure

EXAMPLE Isolating valves, control valve, air release valve, non-return valve, hydrant.

Note 1 to entry: See Clause 13.

4 Occupational safety and health requirements

During the execution of the works, it is presupposed that local/national regulations on occupational safety and health are followed.

5 Materials in contact with water intended for human consumption

When used under the conditions for which they are designed, in permanent or in temporary contact with water intended for human consumption, ductile iron pipes, fittings and their joints shall not have detrimental effects on the properties of that water for its intended use.

Ductile iron pipeline systems, including pipes, fittings, accessories and joints, consist of various materials. When used for conveying water intended for human consumption, it is presupposed that the materials in contact with the water meet the relevant requirements of the national standards or regulations in the country of use with respect to effect on water quality.

© ISO 2020 – All rights reserved
Documents
Document Sharing Hub
Full document details: BS ISO 21051:2020

6 Input control, transport, handling and storage of pipeline components and inspection

6.1 Input control

Immediately after the uploading of the pipes at site, pipeline components, including fittings and accessories, should be checked for the markings, suitability for the use in the defined project and should be inspected for the following:

— deformations or dent;

— cracks;

— damage to the pipe ends;

— damage to the external coating and internal lining.

Items requiring repair should be identified and stored separately.

6.2 Transport, handling and storage and inspection of pipeline components

6.2.1 Transport

The following precautions shall be taken during transport and handling of pipe and pipeline components:

— suitable support for the pipes should be provided, which should be resistant and durable, with timbers under the lower layers of the pipes as well as between the other layers;

— pipes should be secured at the sides and at the ends to prevent any longitudinal movement, to avoid damage in the event of a lorry or truck suddenly braking;

— no part of the pipes should be unsupported with provision of the wooden props;

— pipes should be kept in a balanced condition with two parallel rows of good quality timbers fastened to the floor;

— slings or rubber protected hooks should be used for the loading and unloading of the pipes.

6.2.2 Handling

6.2.2.1 General

Sufficient care shall be taken during handling of the pipe to avoid damage to the pipes, pipe lining and coating. During the loading and unloading operation, no one shall stand below the pipe or pipe bundles or in the area around the crane.

6.2.2.2 and 6.2.2.3 shall be followed for the handling of the pipes.

6.2.2.2 Pipes in bundled condition

Pipes shall be lifted by a suitable method, for example, using slings or by use of forklift (see Figure 1).

Steel strips are used to bundle the pipes. The straps should only be cut with suitable tools such as tin snips or side cutters. Use of cold chisels, crowbars, pickaxes or the similar material may cause damage to the external coating of the pipes and also means a greater risk of accidents. Before the straps are cut, it shall be ensured that:

a) the bundle of pipes is standing on the non-sloping ground which is levelled to the maximum possible extent and is able to carry the weight of the bundle;

© ISO 2020 – All rights reserved

Documents
Document Sharing Hub
Full document details: BS ISO 21051:2020

b) the pipes are secured against rolling and slipping;

c) no one is standing beside the bundle of pipes or on the top of it.

After the bundling, the lifting of bundles shall be done from bottom by suitable tolls and not by hooking to the steel strips.

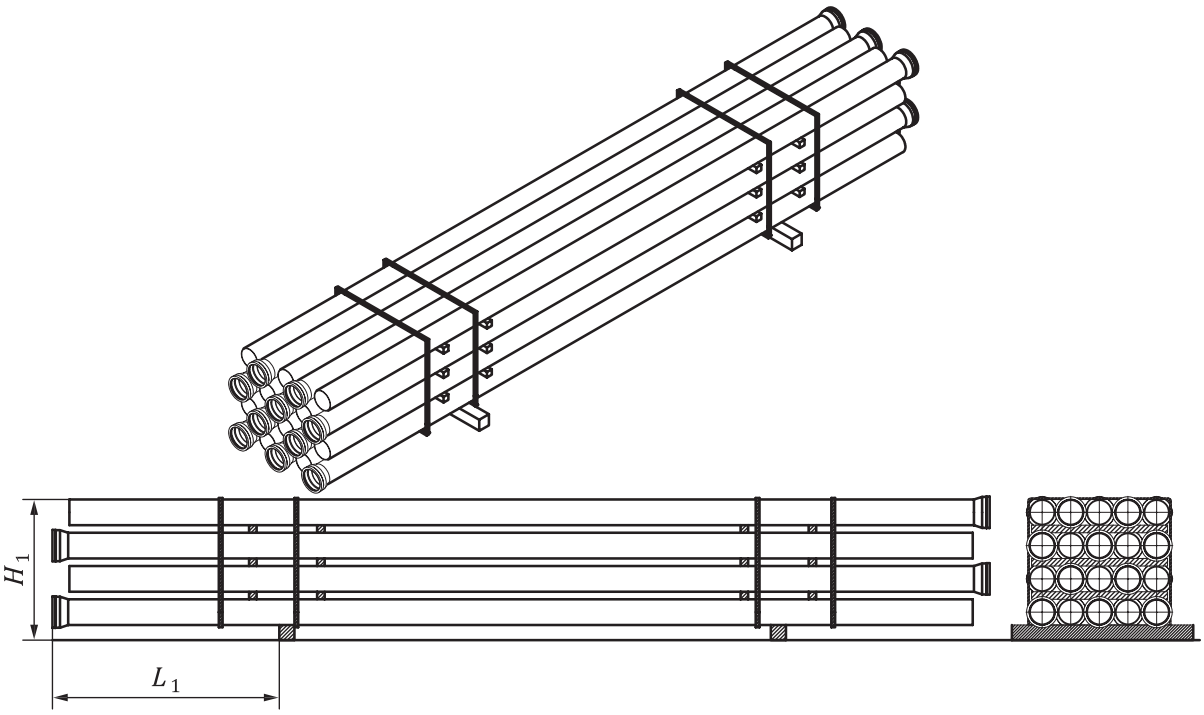

Key

H_1 height ≤3 m

L_1 support location from pipe end ≤1,5 m

Figure 1 — Pipes in bundled condition

6.2.2.3 Pipes in loose condition

For pipe in loose condition, the pipes shall be lifted by use of appropriately shaped hooks or by use of padded slings (see Figure 2) coated with rubber or a similar material to avoid damage to the lining and coating. Sufficient care shall be taken to avoid rolling of the pipes, which may cause damage to the pipe lining and coating.

© ISO 2020 – All rights reserved
Documents
Document Sharing Hub
Full document details: BS ISO 21051:2020

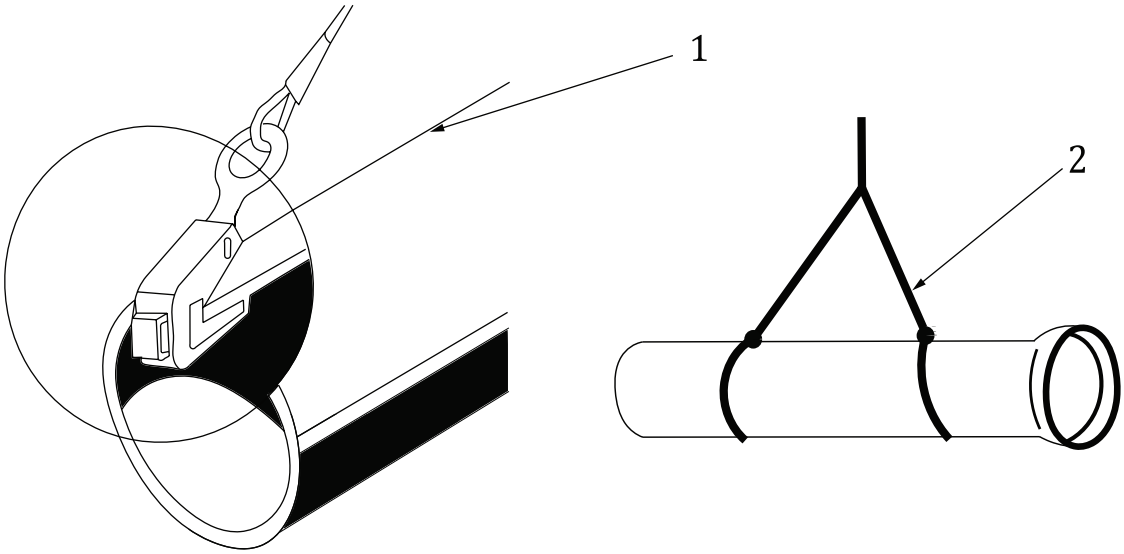

Key

1 padded slings to be used

2 pipe sling should be protected against sliding

Figure 2 — Lifting of pipes in loose condition

6.2.3 Storage

6.2.3.1 General

Storage of pipes at site should be done considering the local national regulation and all the safety norms.

The following precautions should be taken into account, while storing the ductile iron pipes:

— pipes should be stored so that they do not come in contact with harmful substances like solids, liquids, gases;

— they are therefore also not to be stored directly on the ground, but on appropriate materials;

— pipes should be protected suitably so that they are not internally contaminated with soil, mud, dirt, water or the like by use of suitable method like end caps;

— support and stack heights should be chosen so that damage and permanent deformation or damage to the external protection does not occur.

Manufacturer's recommendations should be followed for the storage of pipes. However, in general the suggested methods of storage are described in 6.2.3.2 to 6.2.3.5.

6.2.3.2 Storage of non-bundled pipes — Parallel stacking

For storage of non-bundled pipes, the parallel stacking method should be used, using wooden battens between rows. The following precautions should be taken for the storage of pipes:

— stacking area should have a foundation so as to have smooth movement of vehicles and easy access to the top layer;

— pipes should be stacked on wooden battens positioned suitably from each end of the pipe;

— the socket of the pipes in each successive layer should be reversed and the battens should be of sufficient thickness to avoid metal to metal contact (Figure 3);

© ISO 2020 – All rights reserved

Documents
Document Sharing Hub
Full document details: BS ISO 21051:2020

— an adequate number of blocks should be wedged under the outer of pipes of each layer, so as to ensure stability;

— pipes should be protected suitably so that they are not internally contaminated with soil, mud, dirt, water or the like by use of suitable method like end caps.

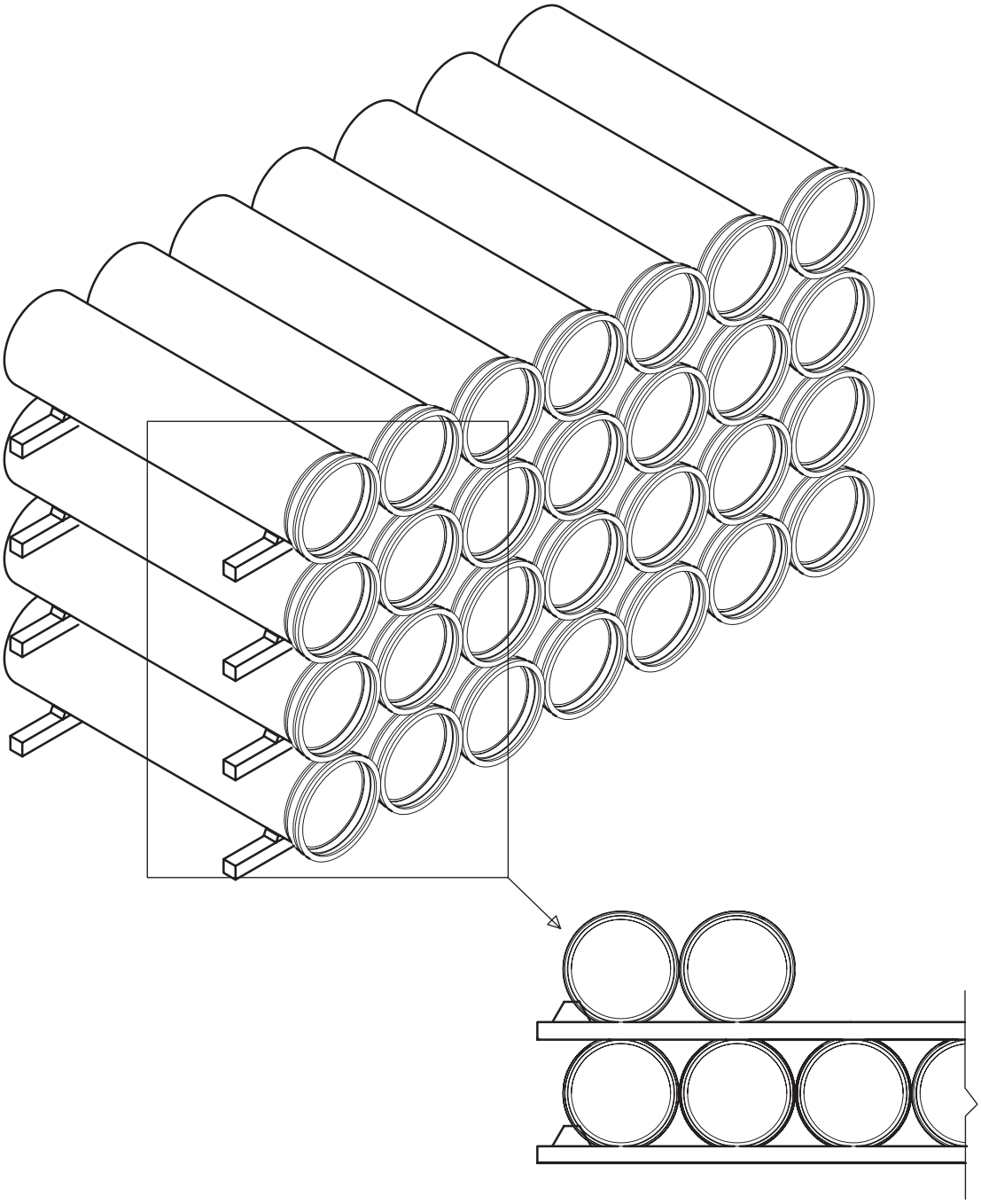

Figure 3 — Parallel stacking of pipes

6.2.3.3 Storage of non–bundled pipes — Pyramid stacking

This method of storing (see Figure 4) is suggested from the safety point of view and cost of materials used for storing. This method of storage requires end lifting of pipes with hooks and a number of pipes can be lifted using multiple hooks.

© ISO 2020 – All rights reserved
Documents
Document Sharing Hub
Full document details: BS ISO 21051:2020

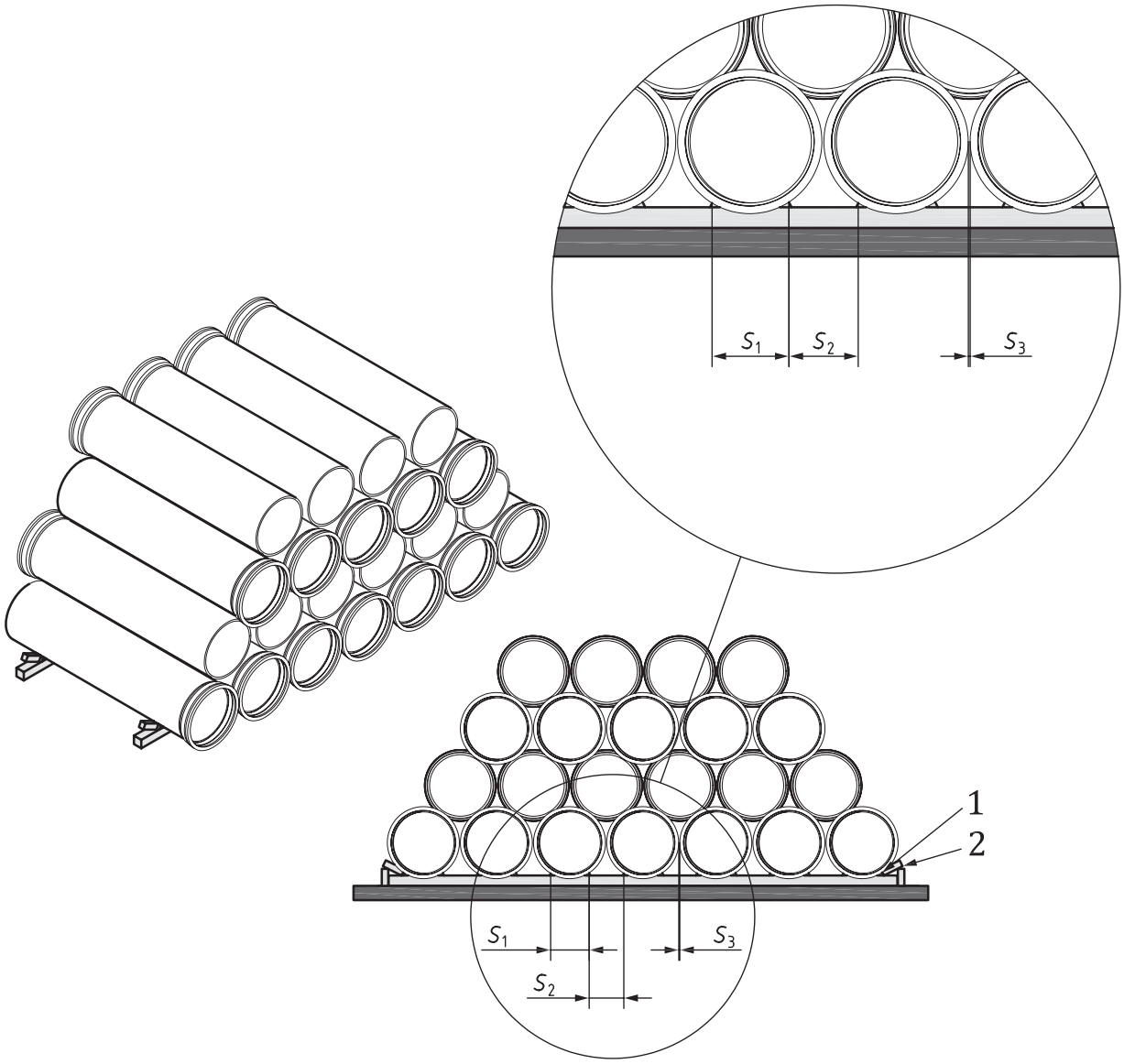

Key

1 triangle wedge

2 stopper

S_1 spacing of triangular wedges of each individual pipe

S_2 spacing between triangular wedges of adjacent pipe at bottom

S_3 spacing between two adjacent pipes at socket face position (to ensure proper socket segregation)

Figure 4 — Pyramid stacking of pipes

The bottom layer is laid on two timbers, arranged in parallel, one being 1 m from the socket end and the other 1 m from the spigot end. The pipes are also parallel with one another. The pipes at the two ends are secured at the sockets and spigots with large wooden wedges nailed to the timbers. Strong stopper shall be used at both ends of the bottom layer to avoid stock collapse. Dimensions of S_1, S_2 and S_3 shall be decided to ensure proper socket segregation of pipes in the same tier.

The upper layers consist of pipes laid alternatively, socket to spigot, with the sockets in one tier overhanging the spigots of the pipes in the tier below. All the sockets of one tier overhang the spigots of the tier below by approximately 10 cm, thus avoiding the deformation of the spigots.

© ISO 2020 – All rights reserved

Documents
Document Sharing Hub
Full document details: BS ISO 21051:2020

6.2.3.4 Storage of non–bundled pipes — Square stacking

In this method, in the bottom layer, the tier of first layer is similar to pyramid stacking, but the sockets should be alternatively turned to one side and then to the other side. In addition, the sockets should overhang the spigots of adjacent pipes by the whole socket length, plus 5 cm. In the upper layers, each tier consists of parallel pipes, alternating as in the bottom layer. The pipes in one tier are placed perpendicular to the pipes in the tier below. Further, the spigots of the pipes are naturally wedged in by the sockets of the pipes in the tier immediately below. This method keeps packing material to be minimum, but due to the stack formation, implies individual lifting of pipes by their ends.

The maximum number of layers for each size and type of pipes shall be decided based on the consideration of no deformation in the spigot due to the load above. It is suggested to follow manufacturer's recommendations. However, suggested number of layers for stacking in different methods of stacking is given in Table 1:

Table 1 — Stacking of pipes – Suggested maximum number of layers

Serial No.	Nominal pipe size (DN)	Class of pipe	Number of layers in parallel stacking	Number of layers in pyramid stacking	Number of layers in square stacking
1	80	C40	30	50	30
2	100	C40	27	38	27
3	125	C40	22	30	22
4	150	C40	22	26	22
5	200	C40	18	20	18
6	250	C40	16	16	16
7	300	C40	14	13	14
8	350	C30	12	12	12
9	400	C30	11	11	11
10	450	C30	9	10	9
11	500	C30	8	9	8
12	600	C30	7	8	7
13	700	C25	5	7	5
14	800	C25	4	6	4
15	900	C25	4	5	4
16	1 000	C25	3	4	3
17	1 100	C25	3	3	3
18	1 200	C25	2	3	2
19	1 400	C25	2	3	2
20	1 500	C25	2	2	2
21	1 600	C25	1	2	1
22	1 800	C25	1	2	1
23	2 000 to 2 600	C25	1	2	1

NOTE For other classes, a separate calculation is necessary to arrive at the safe number of layers for stacking.

6.2.3.5 Storage of gaskets

Gaskets shall be stored in cool, dry place without being subjected to any deformation. Gaskets should be protected from the direct sunlight. Care shall be taken to ensure that they are not damaged and do not get dirty. The shelf life of the gaskets should be as per the manufacturer's recommendations. The expired gaskets should not be used in the pipe installation.

© ISO 2020 – All rights reserved
Documents
Document Sharing Hub
Full document details: BS ISO 21051:2020

6.2.4 Inspection

Mishandling of ductile iron pipes may cause damage to linings, coatings and may create ovality in pipes.

Before lowering the pipes into trenches, the following checks should be made:

— ovality in pipe;

— condition of cement mortar lining;

— loss of external coating;

— surface condition of spigot area and socket area, which should be clean and any extra paint build up should be removed.

Any damaged pipes should be stored separately and repairs should be carried as per the guidelines provided in Clauses 7 and 8.

7 Coating and lining repairs

7.1 General

As a general principle, ductile iron pipes, fittings and valves are supplied with works applied coatings. Special added coatings are provided at site, if necessary. It is important to select the type of the coating considering the corrosion so as to ensure the durability of the pipeline.

Linings are protective coatings on the internal surfaces of the pipelines. Their purpose is to protect the material of the pipes against chemical reactions with the medium flowing through pipes. These linings are considered to be an integral part of pipe.

The external coating and lining of the pipeline components can become damaged during transportation, handling and storage, which require repair at site.

7.2 Repair external coating

7.2.1 General

Damages like scratches, not affecting the outer coating, don't need to be repaired. Other damages affecting the outer coating should be repaired by applying the outer coating material, as per the recommendations of the manufacturer by brush, roller or spray after cleaning the surface of the coating.

7.2.2 Repair procedure

Areas left uncoated, e.g. under the test and coating damaged in excess of 5 cm^2 per square meter of coating, shall be repaired in accordance with the requirements of ISO 8179-1:2017, 5.5, b).

In case of low temperatures and humidity, the pipe surface should be heated to an adequate temperature as per manufacturer's recommendations before applying the coating in criss-cross passes.

The manufacturer's recommendations should be followed for special coatings.

NOTE In case of loss of gloss or fading of colour of the external finishing layer, which can be due to exposure to sunlight and other strong rays, without affecting the thickness of the coating, no repair is necessary.

© ISO 2020 – All rights reserved

Documents
Document Sharing Hub
Full document details: BS ISO 21051:2020

7.3 Repair cement mortar lining

7.3.1 General

The hairline cracks and shrinkage cracks are associated with the cement mortar lining and commonly appear when the lining gets dried. The disbondment and shrinkage of the cement mortar occur due to the storage of the pipe and fittings in a hot and dry environment particularly directly under the sun. The heat in the environment causes the expansion of the metal and at the same time shrinkage in the cement mortar, resulting in disbondment. When such pipes and fittings come in contact with water, due to absorption of moisture, the lining will swell; the cracks will close; and ultimately the cement mortar lining will heal due to autogenous process.

In such cases the crack width and the radial displacement should not exceed the permissible values mentioned in ISO 4179:2005, Table 1. If the crack width and radial displacement value exceeds the permissible limits, it shall be repaired as per the procedure prescribed by the manufacturer. The repair material is cement mortar of a similar type as the one used to line the pipe, or a dedicated repair material made of mineral and organic finders.

7.3.2 Repair procedure cement mortar lining

The cement mortar lining should be repaired for the damage, which is visible and affects the minimum thickness requirement of the lining as per ISO 4179. The brief procedure is described in Figure 5 below:

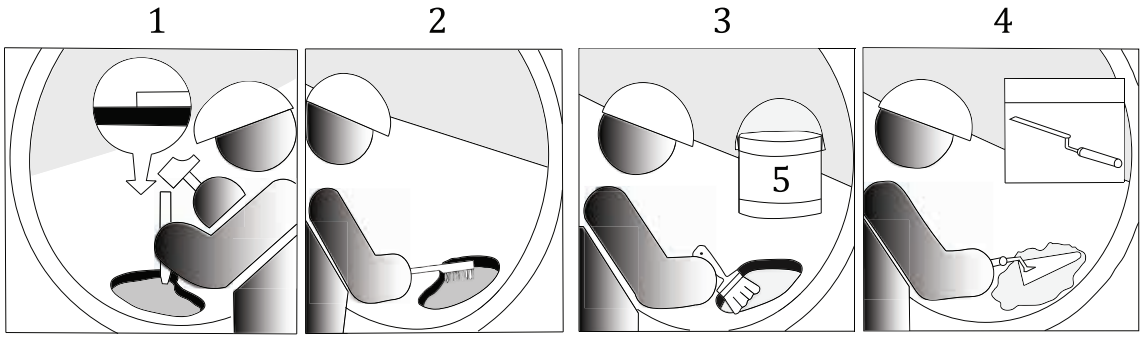

Key

1 step 1 : Cut the damaged portion.

2 step 2 : Clean the cut out portion.

3 step 3 : Wet the surface.

4 step 4 : Apply smooth cement mortar and finish with towel.

5 water + emulsion

Figure 5 — Repair of cement mortar lining

8 Cutting of pipes and ovality correction

8.1 Cutting of pipes

8.1.1 General

If site demands the cutting of pipe to any length, the same can be done if the external diameter (DE) of the pipe is checked and found within the tolerance limit. Small diameter pipes up to DN 300 can be cut up to 2/3 of the length of the pipe from the spigot end, so as to ensure that the external diameter of the pipe is within the tolerance limit for DE. For pipes above DN 300, the manufacturer can supply at the request of the purchaser a certain percentage of the total quantity of pipes (duly marked), which has the DE within the tolerance limit such that the pipes can be cut at any point. For the balance quantity of

© ISO 2020 – All rights reserved
Documents
Document Sharing Hub
Full document details: BS ISO 21051:2020

pipes, pipes can be cut at site allowing the assembly of joint over at least 2/3 of the pipe length from the spigot after checking the ovality of pipe and the external diameter within the tolerance limits.

8.1.2 Pipe cutting tools

Pipe can be cut using electric high-speed disc cutter or conventional hack-saw depending upon the pipe diameter. For large diameter pipes (above DN 1 000), the automated chain cutter can be used.

8.1.3 Chamfering of cut edge

After cutting of the pipe, the cut edge should be chamfered with a grinder for mechanical joint pipes or should be chamfered using a grinder for the push-in joints to avoid damage to the gasket. For mechanical joint pipes, the edges may only be rounded. Also, in case of any damage to the lining and coating, the same shall be repaired before the use of cut length pipes. The chamfer dimension should be followed as per the manufacturer's recommendations.

8.1.4 Repair of damaged lining and coating

In case of any damage to the lining and coating due to cutting, the same shall be repaired before the use of cut length pipes. Further, the cut surface of the pipe shall be coated with suitable coating material as per the manufacturer’s recommendations before use.

8.2 Ovality correction

Transport, handling and storage can bring sufficient pipe ovality to affect the assembly of pipe components. If the ovality of the pipe is not in accordance with the requirement of ISO 2531:2009, 4.2.2, re-rounding of the pipes shall be done at site as per the manufacturer's recommendations for ovality correction.

For the pipes up to DN 600 (see Figure 6), the suitable equipment can be used to bring down the ovality within the prescribed limit. Whereas, for the pipes above DN 600 (see Figure 7), hydraulic jack can be used to correct the ovality of the pipes.

© ISO 2020 – All rights reserved

Documents
Document Sharing Hub
Full document details: BS ISO 21051:2020

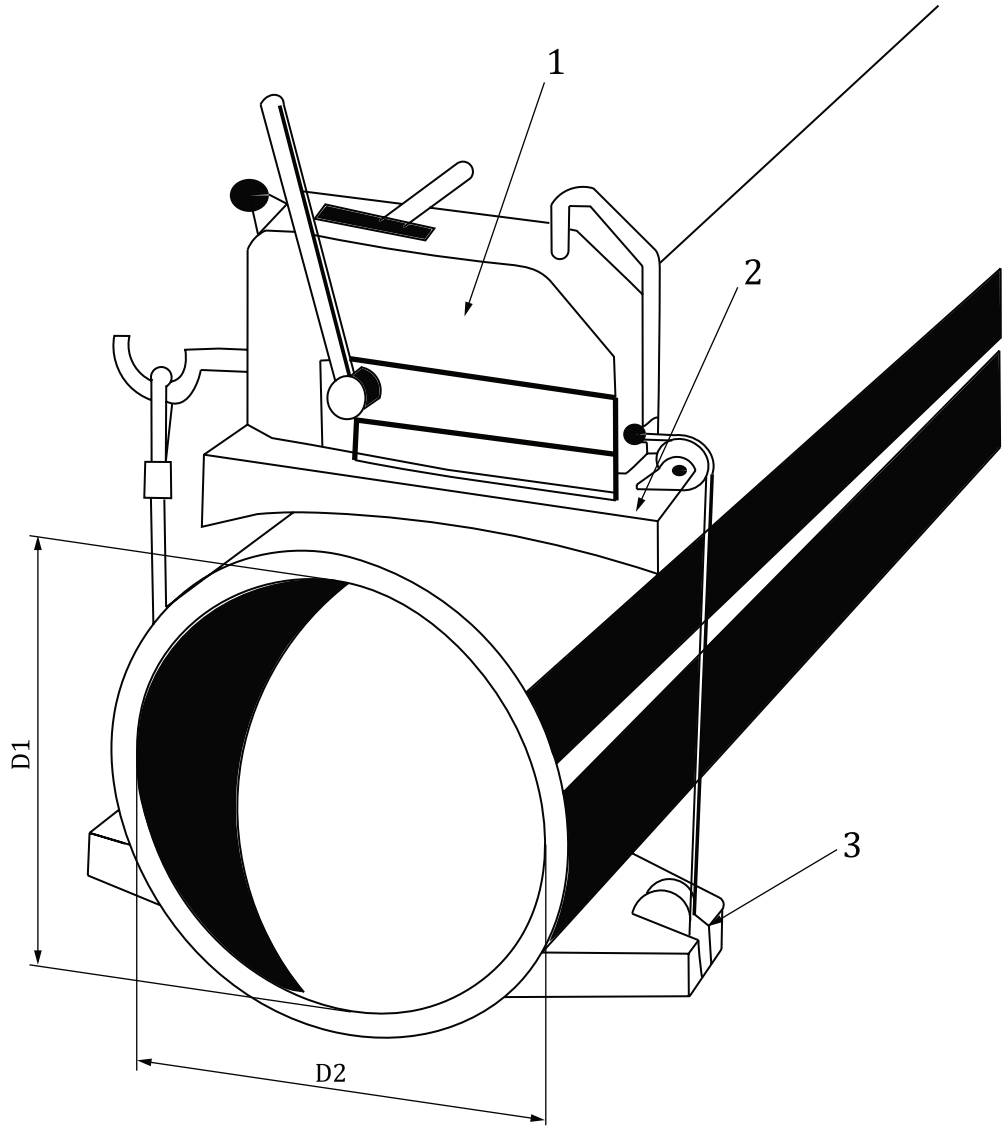

Key

1 winch

2 winch support with cable guide roller

3 base plate with 2 cable guide roller

D1 major axis

D2 minor axis

Figure 6 — Ovality correction up to DN 600

© ISO 2020 – All rights reserved
Documents
Document Sharing Hub
Full document details: BS ISO 21051:2020