BS ISO 21219-5:2019

BSI Standards Publication

Intelligent transport systems — Traffic and travel information (TTI) via transport protocol experts group, generation 2 (TPEG2)

Part 5: Service framework (TPEG2-SFW)

Documents
Document Sharing Hub

Full document details: BS ISO 21219-5:2019

National foreword

This British Standard is the UK implementation of ISO 21219-5:2019. It supersedes PD ISO/TS 21219-5:2015, which is withdrawn.

The UK participation in its preparation was entrusted to Technical Committee EPL/278, Intelligent transport systems.

A list of organizations represented on this committee can be obtained on request to its secretary.

This publication does not purport to include all the necessary provisions of a contract. Users are responsible for its correct application.

© The British Standards Institution 2019
Published by BSI Standards Limited 2019

ISBN 978 0 539 02308 4

ICS 03.220.01; 35.240.60

Compliance with a British Standard cannot confer immunity from legal obligations.

This British Standard was published under the authority of the Standards Policy and Strategy Committee on 31 July 2019.

Amendments/corrigenda issued since publication

Date	Text affected

Documents
Document Sharing Hub

Full document details: BS ISO 21219-5:2019

INTERNATIONAL STANDARD

ISO 21219-5

First edition
2019-07

Intelligent transport systems — Traffic and travel information (TTI) via transport protocol experts group, generation 2 (TPEG2) —

Part 5: Service framework (TPEG2-SFW)

Systèmes intelligents de transport — Informations sur le trafic et le tourisme via le groupe expert du protocole de transport, génération 2 (TPEG2) —

Partie 5: Cadre de service (TPEG2-SFW)

Reference number
ISO 21219-5:2019(E)

Documents
Document Sharing Hub

© ISO 2019

Full document details: BS ISO 21219-5:2019

COPYRIGHT PROTECTED DOCUMENT

© ISO 2019

All rights reserved. Unless otherwise specified, or required in the context of its implementation, no part of this publication may be reproduced or utilized otherwise in any form or by any means, electronic or mechanical, including photocopying, or posting on the internet or an intranet, without prior written permission. Permission can be requested from either ISO at the address below or ISO's member body in the country of the requester.

ISO copyright office
CP 401 • Ch. de Blandonnet 8
CH-1214 Vernier, Geneva
Phone: +41 22 749 01 11
Fax: +41 22 749 09 47
Email: copyright@iso.org
Website: www.iso.org

Published in Switzerland

© ISO 2019 – All rights reserved

Documents
Document Sharing Hub

Full document details: BS ISO 21219-5:2019

Contents

Page

Foreword ... **iv**
Introduction ... **v**
1 Scope ... **1**
2 Normative references ... **1**
3 Terms and definitions ... **1**
4 Abbreviated terms ... **2**
5 General — TPEG ... **3**
5.1 TPEG transmission ... 3
5.2 TPEG roles ... 4
5.3 TPEG layer model ... 4
5.4 Design principles ... 6
6 Description of TPEG Multiplex and TPEG Structures ... **6**
6.1 Overview ... 6
6.2 TPEG Transport level ... 8
6.3 TPEG Service level ... 8
6.3.1 General ... 8
6.3.2 TPEG Service structure ... 8
6.3.3 Service level attributes description ... 8
6.4 TPEG Service Component level ... 9
6.4.1 Service Component structure ... 9
Annex A (normative) **TPEG-Binary Representation of Framework Structures** ... **11**
Annex B (normative) **tpegML Representation of Framework Structures** ... **18**
Annex C (normative) **SID administrative procedures** ... **39**
Annex D (normative) **CRC calculation** ... **40**
Bibliography ... **42**

© ISO 2019 – All rights reserved

Documents
Document Sharing Hub
Full document details: BS ISO 21219-5:2019

Foreword

ISO (the International Organization for Standardization) is a worldwide federation of national standards bodies (ISO member bodies). The work of preparing International Standards is normally carried out through ISO technical committees. Each member body interested in a subject for which a technical committee has been established has the right to be represented on that committee. International organizations, governmental and non-governmental, in liaison with ISO, also take part in the work. ISO collaborates closely with the International Electrotechnical Commission (IEC) on all matters of electrotechnical standardization.

The procedures used to develop this document and those intended for its further maintenance are described in the ISO/IEC Directives, Part 1. In particular, the different approval criteria needed for the different types of ISO documents should be noted. This document was drafted in accordance with the editorial rules of the ISO/IEC Directives, Part 2 (see www.iso.org/directives).

Attention is drawn to the possibility that some of the elements of this document may be the subject of patent rights. ISO shall not be held responsible for identifying any or all such patent rights. Details of any patent rights identified during the development of the document will be in the Introduction and/or on the ISO list of patent declarations received (see www.iso.org/patents).

Any trade name used in this document is information given for the convenience of users and does not constitute an endorsement.

For an explanation of the voluntary nature of standards, the meaning of ISO specific terms and expressions related to conformity assessment, as well as information about ISO's adherence to the World Trade Organization (WTO) principles in the Technical Barriers to Trade (TBT) see www.iso.org/iso/foreword.html.

This document was prepared by Technical Committee ISO/TC 204, *Intelligent transport systems*.

This first edition cancels and replaces ISO/TS 21219-5:2015, which has been technically revised.

A list of all parts in the ISO 21219 series can be found on the ISO website.

Any feedback or questions on this document should be directed to the user's national standards body. A complete listing of these bodies can be found at www.iso.org/members.html.

© ISO 2019 – All rights reserved
Documents
Document Sharing Hub
Full document details: BS ISO 21219-5:2019

Introduction

History

TPEG technology was originally proposed by the European Broadcasting Union (EBU) Broadcast Management Committee, who established the B/TPEG project group in the autumn of 1997 with a brief to develop, as soon as possible, a new protocol for broadcasting traffic and travel-related information in the multimedia environment. TPEG technology, its applications and service features were designed to enable travel-related messages to be coded, decoded, filtered and understood by humans (visually and/or audibly in the user's language) and by agent systems. Originally, a byte-oriented data stream format, which may be carried on almost any digital bearer with an appropriate adaptation layer, was developed. Hierarchically structured TPEG messages from service providers to end-users were designed to transfer information from the service provider database to an end-user's equipment.

One year later, in December 1998, the B/TPEG group produced its first EBU specifications. Two documents were released. Part 2 (TPEG-SSF, which became ISO/TS 18234-2) described the syntax, semantics and framing structure, which was used for all TPEG applications. Meanwhile, Part 4 (TPEG-RTM, which became ISO/TS 18234-4) described the first application for road traffic messages.

Subsequently, in March 1999, CEN/TC 278, in conjunction with ISO/TC 204, established a group comprising members of the former EBU B/TPEG and this working group continued development work. Further parts were developed to make the initial set of four parts, enabling the implementation of a consistent service. Part 3 (TPEG-SNI, ISO/TS 18234-3) described the service and network information application used by all service implementations to ensure appropriate referencing from one service source to another.

Part 1 (TPEG-INV, ISO/TS 18234-1) completed the series by describing the other parts and their relationship; it also contained the application IDs used within the other parts. Additionally, Part 5, the public transport information application (TPEG-PTI, ISO/TS 18234-5), was developed. The so-called TPEG-LOC location referencing method, which enabled both map-based TPEG-decoders and non-map-based ones to deliver either map-based location referencing or human readable text information, was issued as ISO/TS 18234-6 to be used in association with the other applications of parts of the ISO/TS 18234 series to provide location referencing.

The ISO/TS 18234 series has become known as TPEG Generation 1.

TPEG Generation 2

When the Traveller Information Services Association (TISA), derived from former forums, was inaugurated in December 2007, TPEG development was taken over by TISA and continued in the TPEG applications working group.

It was about this time that the (then) new Unified Modelling Language (UML) was seen as having major advantages for the development of new TPEG applications in communities who would not necessarily have binary physical format skills required to extend the original TPEG TS work. It was also realized that the XML format for TPEG described within the ISO/TS 24530 series (now superseded) had a greater significance than previously foreseen, especially in the content-generation segment and that keeping two physical formats in synchronism, in different standards series, would be rather difficult.

As a result, TISA set about the development of a new TPEG structure that would be UML-based. This has subsequently become known as TPEG Generation 2.

TPEG2 is embodied in the ISO/TS 21219 series and it comprises many parts that cover introduction, rules, toolkit and application components. TPEG2 is built around UML modelling and has a core of rules that contain the modelling strategy covered in ISO 21219-2, ISO 21219-3 and ISO 21219-4 and the conversion to two current physical formats: binary and XML; others could be added in the future. TISA uses an automated tool to convert from the agreed UML model XMI file directly into an MS Word document file, to minimize drafting errors, that forms the annex for each physical format.

© ISO 2019 – All rights reserved

Documents
Document Sharing Hub
Full document details: BS ISO 21219-5:2019

TPEG2 has a three-container conceptual structure: message management (ISO 21219-6), application (several parts) and location referencing (ISO/TS 21219-7). This structure has flexible capability and can accommodate many differing use cases that have been proposed within the TTI sector and wider for hierarchical message content.

TPEG2 also has many location referencing options as required by the service provider community, any of which may be delivered by vectoring data included in the location referencing container.

The following classification provides a helpful grouping of the different TPEG2 parts according to their intended purpose. Note that the list below may be incomplete, e.g. new TPEG2 parts may be introduced after publication of this document.

— Toolkit parts: TPEG2-INV (ISO/TS 21219-1), TPEG2-UML (ISO 21219-2), TPEG2-UBCR (ISO 21219-3), TPEG2-UXCR (ISO 21219-4), TPEG2-SFW (ISO 21219-5), TPEG2-MMC (ISO 21219-6), TPEG2-LRC (ISO/TS 21219-7).

— Special applications: TPEG2-SNI (ISO/TS 21219-9), TPEG2-CAI (ISO/TS 21219-10), TPEG2-LTE (ISO/TS 21219-24).

— Location referencing: TPEG2-OLR (ISO/TS 21219-22), TPEG2-GLR (ISO/TS 21219-21), TPEG2-TLR (ISO 17572-2), TPEG2-DLR (ISO 17572-3).

— Applications: TPEG2-PKI (ISO/TS 21219-14), TPEG2-TEC (ISO/TS 21219-15), TPEG2-FPI (ISO/TS 21219-16), TPEG2-TFP (ISO 21219-18), TPEG2-WEA (ISO/TS 21219-19), TPEG2-RMR (ISO/TS 21219-23), TPEG2-EMI (ISO/TS 21219-25), TPEG2-VLI (ISO/TS 21219-26).

TPEG2 has been developed to be broadly (but not totally) backward compatible with TPEG1 to assist in transitions from earlier implementations, while not hindering the TPEG2 innovative approach and being able to support many new features, such as dealing with applications having both long-term, unchanging content and highly dynamic content, such as parking information.

© ISO 2019 – All rights reserved
Documents
Document Sharing Hub
Full document details: BS ISO 21219-5:2019

Intelligent transport systems — Traffic and travel information (TTI) via transport protocol experts group, generation 2 (TPEG2) —

Part 5:
Service framework (TPEG2-SFW)

1 Scope

This document establishes a method of conveying data for a wide range of applications that require the efficient transmission of point to multi-point data over potentially unreliable broadcast channels. It is also suitable for point-to-point and multicast applications and may easily be encapsulated in Internet Protocol.

This document describes the basic capabilities of the generation 2 TPEG (TPEG2) for providing a multiplex of TPEG Services and applications. Together with the definitions of the general TPEG UML modelling rules and the particular physical TPEG representations for TPEG-binary streams (TISA: TPEG UML Conversion Rules) and tpegML files (TISA Specification: TPEG UML Conversion Rules), it replaces the former documents TPEG-INV and TPEG-SSF.

2 Normative references

The following documents are referred to in the text in such a way that some or all of their content constitutes requirements of this document. For dated references, only the edition cited applies. For undated references, the latest edition of the referenced document (including any amendments) applies.

ISO/TS 18234-3, *Intelligent transport systems — Traffic and travel information via transport protocol experts group, generation 1 (TPEG1) binary data format — Part 3: Service and network information (TPEG1-SNI)*

3 Terms and definitions

For the purposes of this document, the following terms and definitions apply.

ISO and IEC maintain terminological databases for use in standardization at the following addresses:

— ISO Online browsing platform: available at https://www.iso.org/obp

— IEC Electropedia: available at http://www.electropedia.org/

3.1
TPEG Application
application layer protocol fulfilling the general TPEG requirements at the highest layer of the ISO OSI model and standardized by TISA/ISO

Note 1 to entry: A TPEG Application consists of a set of classes and rules for encoding information required for a traffic information service.

3.2
TPEG Client
device or entity on the receiving side of the TPEG transmission chain

Note 1 to entry: See 5.2.

© ISO 2019 – All rights reserved

Documents
Document Sharing Hub
Full document details: BS ISO 21219-5:2019

3.3
TPEG Server
device or entity on the sending side of the TPEG transmission chain

Note 1 to entry: See 5.2.

3.4
TPEG Service
multiplex of TPEG Service Components with a dedicated Service ID

Note 1 to entry: See 6.1.

3.5
TPEG Service Component
virtual channel for messages of a dedicated TPEG Application

Note 1 to entry: See 6.1.

3.6
Service Frame
data-structure implementing the TPEG Service in the TPEG binary representation

3.7
Service Component Frame
data-structure implementing the TPEG Service Component stream in the TPEG binary representation

3.8
TPEG Service Multiplex
multiplex of TPEG Services within one data stream or file

3.9
TPEG Stream Directory
TPEG Structure used for signalling the TPEG Services within a Service Multiplex

3.10
TPEG Structure
data structure used by TPEG on the particular protocol layers of the service transmission

4 Abbreviated terms

AID	Application Identification
BPN	Broadcast, Production and Networks (an EBU document publishing number system)
CEN	Comité Européen de Normalisation
CRC	Cyclic Redundancy Check
DAB	Digital Audio Broadcasting
DVB	Digital Video Broadcasting
EBU	European Broadcasting Union
INV	Introduction, Numbering and Versions (see EBU BPN 027-1)
IPR	Intellectual Property Right(s)
ISO	International Organization for Standardization

© ISO 2019 – All rights reserved
Documents
Document Sharing Hub
Full document details: BS ISO 21219-5:2019

ITU-T	International Telecommunication Union — Telecom
OSI	Open Systems Interconnection
PTI	Public Transport Information
RTM	Road Traffic Message Application
SFW	Service Framework (this Technical Specification)
SID	Service Identification
SNI	Service and Network Information Application (see EBU BPN 027-3)
SSF	Syntax, Semantics and Framing Structure
TPEG	Transport Protocol Experts Group
TTI	Traffic and Travel Information
UTC	Universal Coordinated Time
UML	Unified Modelling Language
XML	Extensible Markup Language
XSD	XML Schema Definition

5 General — TPEG

5.1 TPEG transmission

TPEG is intended to operate via almost any simple digital data channel, where it is primarily targeted at broadcast media using byte oriented transparent data channels. Other physical formats may pose different constraints on a transmission layer. Thus, TPEG assumes nothing of the channel other than the ability to convey a stream of bytes. To this end, the concept of transmission via a “piece of wire” is envisaged, in which the bearer has no additional service features.

In Figure 1, a variety of possible transmission channels are shown. The only requirement of the channel is that a sequence of bytes may be carried between the TPEG generator and the TPEG decoder. This requirement is described as “transparency”. However, it is recognized that data channels may introduce errors. Bytes may be omitted from a sequence, bytes may become corrupted or additional and erroneous data could be received. Therefore, TPEG incorporates error detection features at appropriate points and levels. It is assumed that bearer systems will introduce an appropriate level of error correction.

© ISO 2019 – All rights reserved

Documents
Document Sharing Hub
Full document details: BS ISO 21219-5:2019

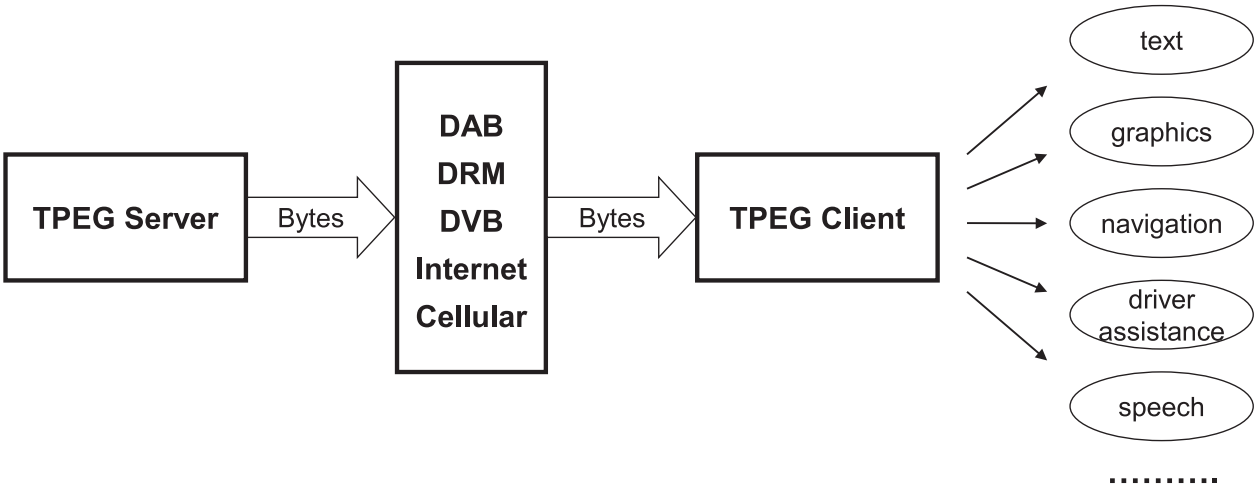

Figure 1 — TPEG data may be delivered simultaneously via different bearer channels

5.2 TPEG roles

The following roles are defined for TPEG devices:

— **TPEG Server** — is the device, group of devices or entity that provides the capabilities to encode TPEG objects, e.g. TPEG messages, TPEG Service Frames or TPEG Service Component Frames and which transmits it via a suitable digital bearer to the TPEG Client side.

— **TPEG Client** — is the device or entity that provides the capabilities to decode TPEG objects received from one or several TPEG Servers.

These terms are used in the rest of this document to designate these roles.

5.3 TPEG layer model

In Figure 2, the different layers of the TPEG protocol are identified in accordance with the ISO/OSI model.

© ISO 2019 – All rights reserved
Documents
Document Sharing Hub
Full document details: BS ISO 21219-5:2019

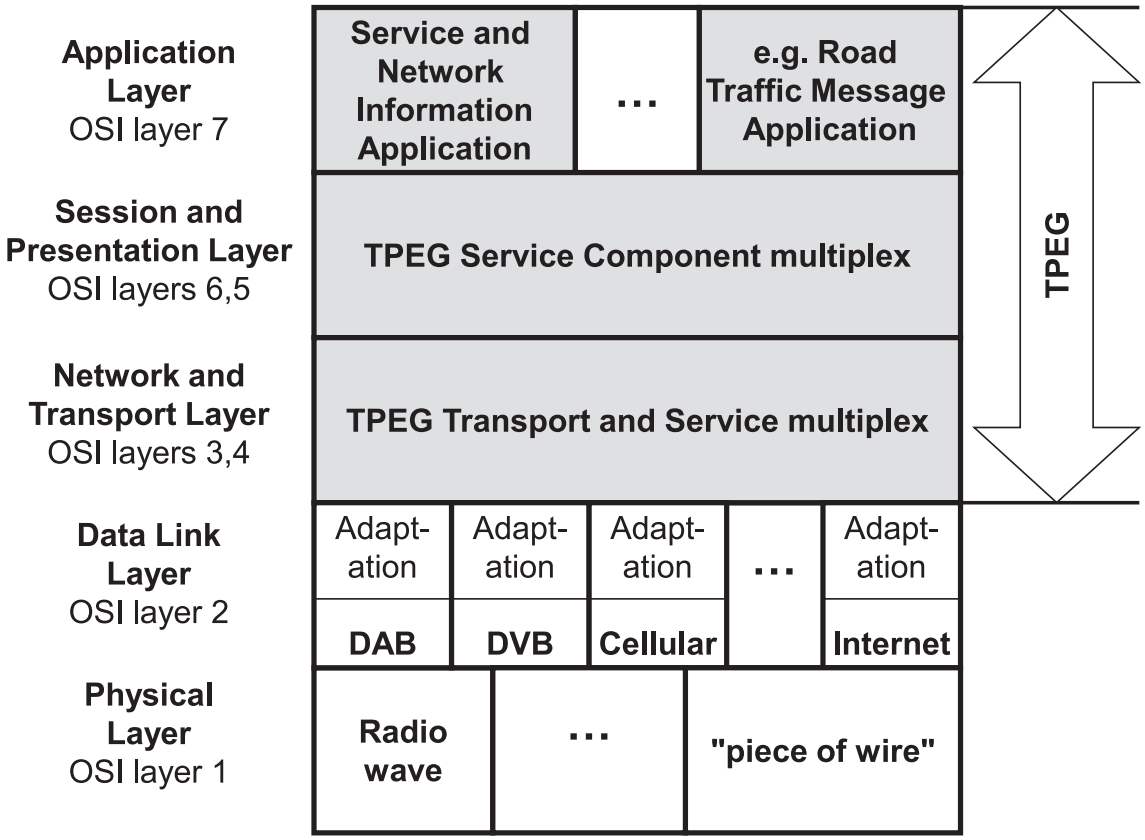

Figure 2 — TPEG in relation to the ISO/OSI Layer Model

Layer 7 is the top level and referred to in TPEG as the application layer. The following TPEG Applications are defined at the date of publication of this document:

— Service and Network Information (SNI) Application;

— Road Traffic Message (RTM) Application;

— Public Transport Information (PTI) Application;

— Location Referencing Container (LRC);

— Parking Information (PKI) Application;

— Traffic Event Compact (TEC) Application;

— Conditional Access Information (CAI) Application.

An up-to-date list of TPEG Applications can be found on the TISA webpage.

Layers 6 and 5 are the presentation and session layers. TPEG Service Components are merged into a single stream and encrypted and/or compressed.

Layers 3 and 4 are the transport and network layers. These layers define the means for synchronisation and routing. This is the lowest layer of the TPEG protocol.

Layer 2 is the datalink layer. This layer consists of a wide range of different bearers, which are suitable carriers for the TPEG protocol. An adaptation layer may be required in order to map the TPEG stream onto that bearer for that TPEG may also define requirements to the bearer.

Layer 1 is the physical layer. This defines the transmission medium (radio waves, wire, optical, etc.). One particular bearer can make use of different physical layers.

© ISO 2019 – All rights reserved

Documents
Document Sharing Hub
Full document details: BS ISO 21219-5:2019

5.4 Design principles

The following general principles have been assumed in the development of the TPEG protocol, structure and semantics:

— TPEG is platform independent and bearer independent;

— TPEG is designed for but not restricted to unidirectional transmission;

— TPEG provides a protocol structure, which employs asynchronous framing;

— TPEG assumes that underlying systems may employ error correction;

— TPEG has a hierarchical data frame structure enabling a multiplex of TPEG Services and TPEG Applications within one data stream;

— TPEG provides worldwide unique identification of TPEG Services;

— TPEG permits the use of encryption mechanisms, if required by an application;

— TPEG Applications can be extended in a backwards compatible way;

— TPEG Applications are modelled using UML. Specific physical transmission formats are derived from these models.

6 Description of TPEG Multiplex and TPEG Structures

6.1 Overview

TPEG provides multiplexing functionality on several TPEG levels (see also Figure 3 below):

— **TPEG Service Components and TPEG Applications:** A TPEG Service Component is used to provide a virtual channel for streams of messages of one and only one TPEG Application type. Accordingly, the content of a TPEG Service Component is encoded following the definitions of the corresponding TPEG Application.

— **TPEG Service Component Multiplex and TPEG Services:** A TPEG Service consists of one or several TPEG Service Components, thus combining several application specific message streams. Each TPEG Service has a worldwide unique Service Identification (SID).

— **TPEG Service Multiplex:** One or several TPEG Service streams can be multiplexed to one bearer-related data-stream. Each of the TPEG Service data objects within this data stream can be unambiguously assigned to a TPEG Service by its unique SID. The Service multiplex enables the realization of several TPEG Services within one data stream.

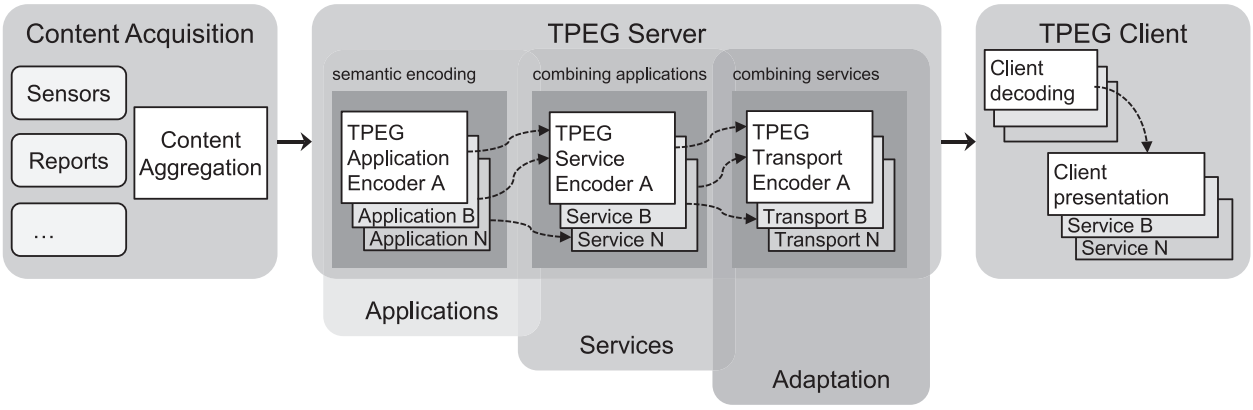

Figure 3 — TPEG multiplex hierarchy

© ISO 2019 – All rights reserved
Documents
Document Sharing Hub
Full document details: BS ISO 21219-5:2019

The multiplex hierarchy described above requires corresponding data structures (TPEG Structures) for the particular protocol layers, i.e.:

— a TPEG Service Component structure for the messages multiplex on Service Component or TPEG Application layer;

— a TPEG Service structure for the Service Component Multiplex on the TPEG Service layer;

— TPEG Transport structures for the multiplex of several TPEG Services within a physical data stream, in particular for the bearer abstraction and the signalling of TPEG Services.

An overview of the structures is given in Figure 4. The hierarchy includes data structures for TPEG Service Components, TPEG Services and TPEG Transport, where the latter ensures the abstraction from the particular transmission bearer. A further structure is the TPEG Stream Directory, which may be used to signal the TPEG Services transmitted in a TPEG Service Multiplex.

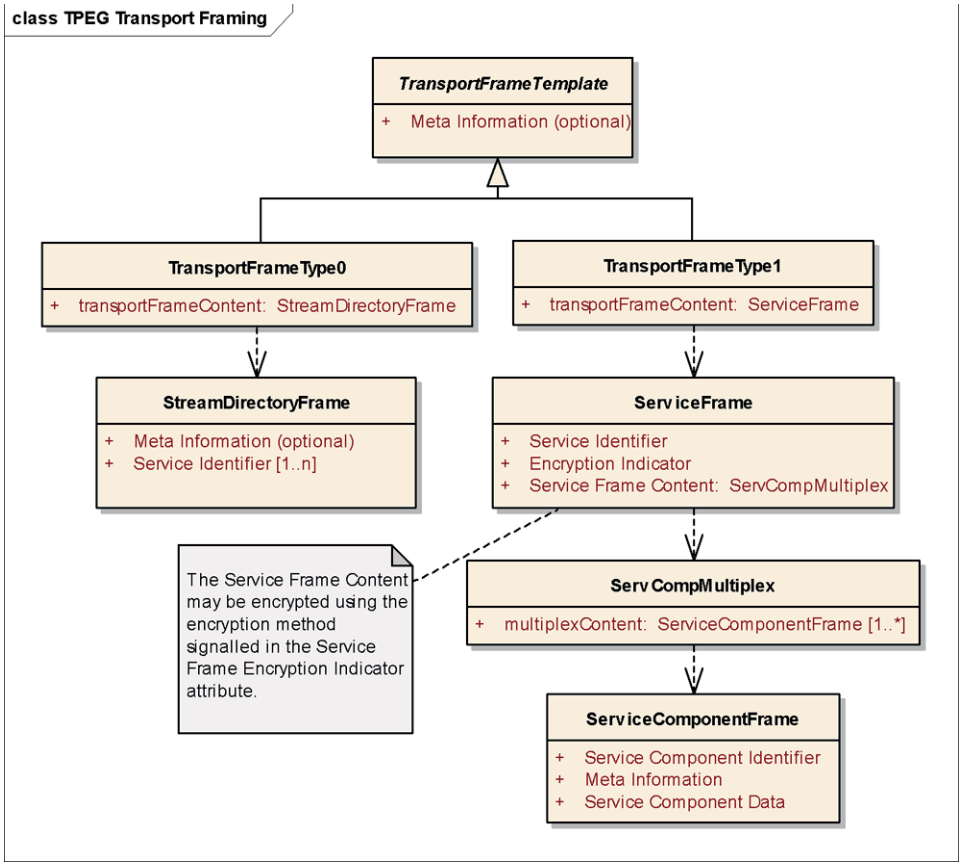

Figure 4 — Transport hierarchy of TPEG Stream Directory and Service Frame Structures

Further transport structures may be defined in the future, e.g. for TPEG multiplex information.

The TPEG Structures shown in the figures above are described on an abstract level in the following clauses. These UML definitions shall not be used for automatic generation of physical format descriptions as defined in TISA Specification: TPEG UML Modelling Rules, TISA: TPEG UML Conversion Rules and TISA Specification: TPEG UML Conversion Rules. In particular, the UML classes above shall not be considered as TPEG Service Components. For definitions of its physical data representations see Annex A for TPEG-binary and Annex B for tpegML.

© ISO 2019 – All rights reserved

Documents
Document Sharing Hub
Full document details: BS ISO 21219-5:2019

6.2 TPEG Transport level

The TPEG Transport level is dependent on the physical representation used. The information provided on this level may include meta information for data structure identification, synchronization and error detection. For details see Annex A for TPEG-binary and Annex B for tpegML.

6.3 TPEG Service level

6.3.1 General

The following sub-clauses describe in an abstract way the data objects used by the TPEG Service Multiplex and Service Component Multiplex. The physical representations of these data objects in TPEG-binary and tpegML are defined in Annex A and Annex B. The attributes of these data objects have dedicated types, which are defined in this document or in TISA Specification: TPEG UML Modelling Rules.

6.3.2 TPEG Service structure

The TPEG Service Structure contains the Service Component Multiplex of a dedicated TPEG Service. Each instance of this structure includes the SID of the corresponding TPEG Service and a different range and number of Service Component Structures as required by the service provider.

The attributes of the TPEG Service structure are listed hereunder:

Table 1 — Attributes of the TPEG Service structure

Name	Type	Multiplicity	Description
SID	ServiceIdentifier	1	Service Identifier (SID A/B/C) of the TPEG Service corresponding to the including Service Structure instance. For details see 6.3.3.2.
ServEncID	IntUnTi	1	The Service Encryption Indicator signals the encryption method used for the Service Component Multiplex contained in the Service Structure object. For details see 6.3.3.1.
Service Component Multiplex	ServiceComponent	1..*	One or several instances of type Service Component Structure (see also 5.4). The resultant data object is transformed according to the encryption method required (if the Encryption Indicator is not 0) or is left unchanged (if the Encryption Indicator = 0).

This structure is solely used to transport the TPEG Stream Directory information, i.e. the SIDs of the TPEG Services transmitted in this data stream. The attributes of the TPEG Stream Directory Structure are listed hereunder:

Table 2 — Attributes of the TPEG Stream Directory structure

Name	Type	Multiplicity	Description
SID	ServiceIdentifier	1..*	A vector of Service Identifiers (SID A/B/C) of the TPEG Services transmitted in the corresponding data stream.

6.3.3 Service level attributes description

6.3.3.1 Service Encryption Indicator

The Service Encryption Indicator is an unsigned integer value with range 0-255. If the indicator has value 0 all data in the Service Component Multiplex are non-encrypted. Every other value of the Service Encryption Indicator indicates that one of several mechanisms for data encryption or compression has

© ISO 2019 – All rights reserved
Documents
Document Sharing Hub
Full document details: BS ISO 21219-5:2019