BS ISO 21308-5:2014

BSI Standards Publication

Road vehicles — Product data exchange between chassis and body work manufacturers (BEP)

Part 5: Coding of loader crane bodywork

bsi.

...making excellence a habit.™

Document Sharing Hub

National foreword

This British Standard is the UK implementation of ISO 21308-5:2014.

The UK participation in its preparation was entrusted to Technical Committee AUE/13, Commercial and public service vehicles.

A list of organizations represented on this committee can be obtained on request to its secretary.

This publication does not purport to include all the necessary provisions of a contract. Users are responsible for its correct application.

© The British Standards Institution 2014. Published by BSI Standards Limited 2014

ISBN 978 0 580 73358 1

ICS 43.080.01

Compliance with a British Standard cannot confer immunity from legal obligations.

This British Standard was published under the authority of the Standards Policy and Strategy Committee on 31 January 2014.

Amendments issued since publication

Date	Text affected

Documents
Document Sharing Hub

Full document details: BS ISO 21308-5:2014

INTERNATIONAL STANDARD

ISO 21308-5

First edition
2014-01-15

Road vehicles — Product data exchange between chassis and body work manufacturers (BEP) —

Part 5: Coding of loader crane bodywork

Véhicules routiers — Échange de données de produit entre les fabricants de châssis et de carrosseries (BEP) —

Partie 5: Codage des grues de chargement

Reference number
ISO 21308-5:2014(E)

Documents
Document Sharing Hub

© ISO 2014

Full document details: BS ISO 21308-5:2014

COPYRIGHT PROTECTED DOCUMENT

© ISO 2014

All rights reserved. Unless otherwise specified, no part of this publication may be reproduced or utilized otherwise in any form or by any means, electronic or mechanical, including photocopying, or posting on the internet or an intranet, without prior written permission. Permission can be requested from either ISO at the address below or ISO's member body in the country of the requester.

ISO copyright office
Case postale 56 • CH-1211 Geneva 20
Tel. + 41 22 749 01 11
Fax + 41 22 749 09 47
E-mail copyright@iso.org
Web www.iso.org

Published in Switzerland

© ISO 2014 – All rights reserved

Documents
Document Sharing Hub

Full document details: BS ISO 21308-5:2014

Contents

Page

Foreword ... **iv**
Introduction ... **v**
1 Scope ... **1**
2 Normative references ... **1**
3 Terms and definitions ... **1**
4 Coding principles ... **6**
4.1 BEP codes of loader cranes ... 6
4.2 Units of BEP code values ... 7
4.3 References for measurements ... 8
5 Coding of geometrical data and space requirements ... **14**
5.1 Mounting positions of crane and auxiliary stabilizers ... 14
5.2 Dimensional interfaces for connections to sub-frame and chassis ... 15
5.3 Crane base dimensions, stabilizers, and lower space requirements ... 17
5.4 Boom system dimensions and space requirements above mounting plane ... 26
5.5 Crane slewing space requirements ... 35
5.6 Auxiliary stabilizer dimensions ... 37
6 Coding of masses ... **41**
6.1 Mass points in transport position ... 41
6.2 Masses with distances in working mode for stability calculations ... 43
7 Coding of forces and moments ... **45**
8 Coding of general crane data ... **45**
8.1 General crane data ... 45
8.2 Mechanical interfaces ... 46
8.3 Hydraulics equipment and interfaces ... 47
8.4 Electrical/electronic equipment and interfaces ... 48
8.5 Load lifting attachments ... 48
Annex A (normative) **XML coding related to this part of ISO 21308** ... **49**
Bibliography ... **51**

© ISO 2014 – All rights reserved

Documents
Document Sharing Hub
Full document details: BS ISO 21308-5:2014

Foreword

ISO (the International Organization for Standardization) is a worldwide federation of national standards bodies (ISO member bodies). The work of preparing International Standards is normally carried out through ISO technical committees. Each member body interested in a subject for which a technical committee has been established has the right to be represented on that committee. International organizations, governmental and non-governmental, in liaison with ISO, also take part in the work. ISO collaborates closely with the International Electrotechnical Commission (IEC) on all matters of electrotechnical standardization.

The procedures used to develop this document and those intended for its further maintenance are described in the ISO/IEC Directives, Part 1. In particular the different approval criteria needed for the different types of ISO documents should be noted. This document was drafted in accordance with the editorial rules of the ISO/IEC Directives, Part 2 (see www.iso.org/directives).

Attention is drawn to the possibility that some of the elements of this document may be the subject of patent rights. ISO shall not be held responsible for identifying any or all such patent rights. Details of any patent rights identified during the development of the document will be in the Introduction and/or on the ISO list of patent declarations received (see www.iso.org/patents).

Any trade name used in this document is information given for the convenience of users and does not constitute an endorsement.

For an explanation on the meaning of ISO specific terms and expressions related to conformity assessment, as well as information about ISO's adherence to the WTO principles in the Technical Barriers to Trade (TBT) see the following URL: Foreword - Supplementary information

The committee responsible for this document is ISO ISO/TC 22, *Road vehicles*, Subcommittee SC 15, *Interchangeability of components of commercial vehicles and buses*.

ISO 21308 consists of the following parts, under the general title *Road vehicles — Product data exchange between chassis and bodywork manufacturers (BEP)*:

— *Part 1: General principles (ISO/PAS)*

— *Part 2: Dimensional bodywork exchange parameters*

— *Part 3: General, mass and administrative exchange parameters*

— *Part 4: Mapping to STEP application protocol 239* [Technical Specification]

— *Part 5: Coding of loader crane bodywork*

© ISO 2014 – All rights reserved
Documents
Document Sharing Hub
Full document details: BS ISO 21308-5:2014

Introduction

Based on the ISO BEP system for coding of bodywork exchange parameters, this part of ISO 21308 specifically deals with the coding of dimensions and other characteristics of loader cranes. The aim is to ensure an efficient and unambiguous communication of dimensional installation data between the parties involved. The BEP coding covers also main characteristics of hydraulic, electrical, and electronic interfaces to the vehicle. XML coding for communication of the related BEP data is included as well.

This part of ISO 21308 is useful for all parties involved in the installation of cranes to vehicles, e.g. loader crane manufacturers, truck chassis manufacturers, and bodywork manufacturers.

© ISO 2014 – All rights reserved

Documents
Document Sharing Hub
Full document details: BS ISO 21308-5:2014

Documents
Document Sharing Hub

INTERNATIONAL STANDARD ISO 21308-5:2014(E)

Road vehicles — Product data exchange between chassis and body work manufacturers (BEP) —

Part 5: Coding of loader crane bodywork

1 Scope

The ISO 21308 series describes a generic system for the exchange of data between truck chassis manufacturers and bodywork manufacturers. It applies to commercial vehicles as defined in ISO 3833, having a maximum gross vehicle mass above 3 500 kg.

The process of exchanging the above information can involve

— chassis manufacturers,

— chassis importers,

— chassis dealers,

— one or more bodywork manufacturers, and

— bodywork component suppliers, e.g. manufacturers of demountable bodies, cranes and loading equipment, and tipping equipment.

This part of ISO 21308 specifically describes the coding dimensions and other characteristics of loader cranes and auxiliary stabilizers, to ensure an efficient and unambiguous communication of installation data between the parties involved.

This part of ISO 21308 covers loader cranes as specified in ISO 15442, designed to be fitted on commercial vehicles (including trailers).

This part of ISO 21308 is not applicable to other load-lifting systems (e.g. tail lifts, hook loader systems).

2 Normative references

The following documents, in whole or in part, are normatively referenced in this document and are indispensable for its application. For dated references, only the edition cited applies. For undated references, the latest edition of the referenced document (including any amendments) applies.

ISO/PAS 21308-1, *Road vehicles — Product data exchange between chassis and bodywork manufacturers (BEP) — Part 1: General principles*

ISO 21308-2, *Road vehicles — Product data exchange between chassis and bodywork manufacturers (BEP) — Part 2: Dimensional bodywork exchange parameters*

ISO 21308-3, *Road vehicles — Product data exchange between chassis and bodywork manufacturers (BEP) — Part 3: General, mass and administrative exchange parameters*

EN 12999, *Cranes — Loader cranes*

3 Terms and definitions

For the purposes of this document, the following terms and definitions apply.

Documents
Document Sharing Hub

© ISO 2014 – All rights reserved

Full document details: BS ISO 21308-5:2014

3.1
loader crane
powered crane comprising of a column that slews about a base and a boom system that is attached to the top of the column and which is usually fitted on a vehicle (including trailer) and designed for loading and unloading the vehicle

[SOURCE: ISO 15442:2005, 3.1.1, modified — Note 1 to entry has been extended.]

Note 1 to entry: Figure 1 shows the main parts of a loader crane referred to in this part of ISO 21308.

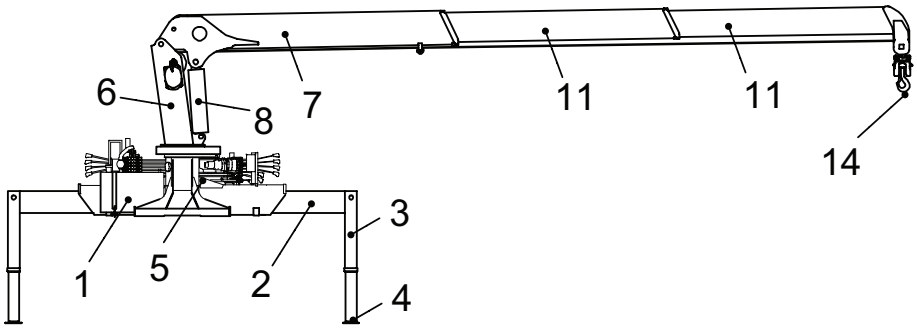

a) Loader crane with straight boom

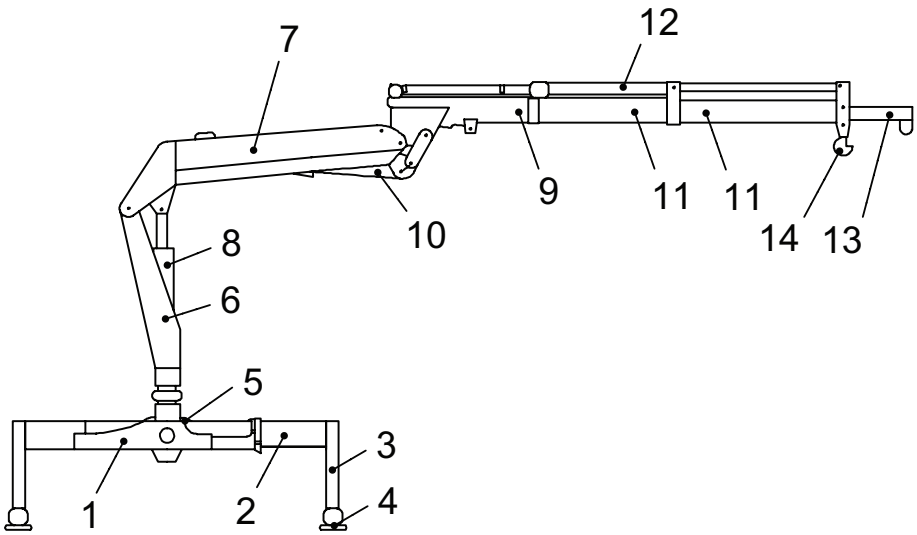

b) Loader crane with articulated boom

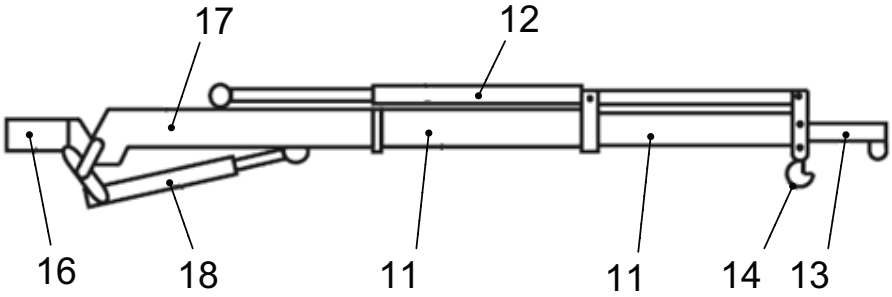

c) Third boom details

© ISO 2014 – All rights reserved
Documents
Document Sharing Hub
Full document details: BS ISO 21308-5:2014

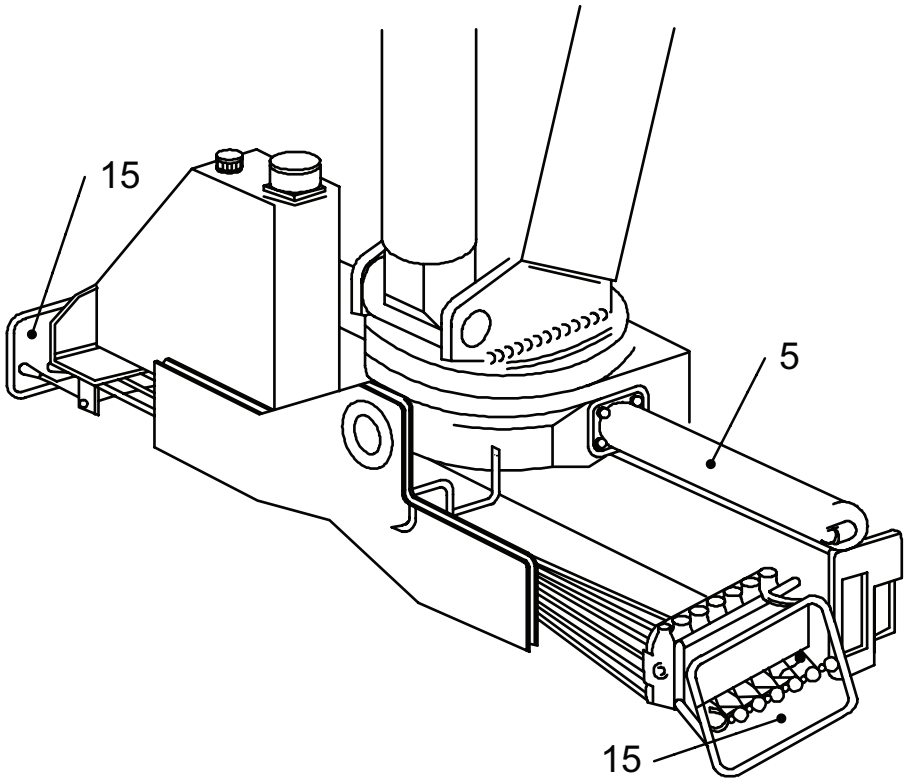

d) Crane base details

Key

1	crane base	7	first boom	13	boom extension, manual
2	stabilizer extension	8	first boom cylinder	14	hook
3	stabilizer leg	9	second boom	15	controls
4	stabilizer foot	10	second boom cylinder	16	third boom adapter
5	slewing mechanism	11	boom extension, hydraulic	17	third boom
6	column	12	extension cylinders	18	third boom cylinder

Figure 1 — Main parts of a loader crane

3.2
articulated boom
boom consisting of members that pivot in the vertical plane

[SOURCE: ISO 15442:2005, 3.1.2]

3.3
crane base
base
housing incorporating anchoring points and bearings for the slewing column

3.4
boom
structural member in the boom system of the loader crane

3.5
boom extension
part of the boom which is capable of telescopic movement to vary its length

© ISO 2014 – All rights reserved

Documents
Document Sharing Hub
Full document details: BS ISO 21308-5:2014

3.6
boom system
complete system consisting of booms, boom extensions, cylinders, and all accessories fixed to booms or boom extensions

3.7
column
slewing structural member which supports the boom system

[SOURCE: ISO 15442:2005, 3.1.6]

3.8
control station
position from which the loader crane may be operated

[SOURCE: ISO 15442:2005, 3.1.7]

3.9
control system
interface between the operating levers and the actuating components which provide movements of the loader crane

[SOURCE: ISO 15442:2005, 3.1.8]

3.10
dead loads
forces due to masses of fixed and movable crane parts (including fluids) which act permanently on the structure while the crane is being used

[SOURCE: ISO 15442:2005, 3.1.10, modified — "(including fluids)" has been added]

3.11
gross load
sum of payload, lifting attachments, and, if applicable, a portion of the hoist rope

3.12
hoist
machine for lifting and lowering suspended loads over predetermined distances using ropes or chains

3.13
load attachment point
point for attachment of means to lift a load

Note 1 to entry: There may be several load attachment points on a boom system.

3.14
mass point
mass given, together with the corresponding Cartesian coordinate

3.15
net lifting moment
rated capacity multiplied by outreach

3.16
nominal extended working position
working position with the first boom at the angle of its maximum moment and, if applicable, with the second and the third boom in the horizontal plane with all extensions fully extended, or if needed at a higher first boom angle to bring the second boom in balance

Note 1 to entry: In balance means that the second boom cylinder is able to hold at least the same payload as the first boom cylinder.

© ISO 2014 – All rights reserved
Documents
Document Sharing Hub
Full document details: BS ISO 21308-5:2014

3.17
nominal retracted working position
working position wherein boom angles are as in nominal extended working position, with all boom extensions fully retracted

3.18
nominal slewing angle
slewing angle when the second boom system is in parallel with the local *x*-axis

3.19
nominal unfolded transport position
position wherein the boom system is in the horizontal plane with all extensions fully retracted

Note 1 to entry: The maximum overall transport height for the applicable country or region should be taken into account.

3.20
outreach
horizontal distance between the axis of rotation of the column and the point of load attachment

3.21
payload
load which is lifted by the crane and suspended from the non-fixed load-lifting attachment(s) or, if such an attachment is not used, directly from the fixed load-lifting attachment(s)

3.22
slewing
rotational movement of the column and boom system about a vertical axis

3.23
slewing centre
rotation centre of the crane column about a vertical axis

3.24
slot
linear range between two end points in the x-y plane where frame attachments can be positioned

3.25
stabilizer
aid to the supporting structure connected to the base of the crane or to the vehicle to provide stability, without lifting the vehicle from the ground

[SOURCE: ISO 15442:2005, 3.1.29]

3.25.1
stabilizer extension
part of the stabilizer capable of extending the stabilizer leg laterally from the transport position to the operating position

[SOURCE: ISO 15442:2005, 3.1.30]

3.25.2
stabilizer leg
part of a stabilizer capable of contacting the ground to provide the required stability

Note 1 to entry: The stabilizer leg is capable of extending the stabilizer foot in order to make contact with the ground.

[SOURCE: ISO 15442:2005, 3.1.31, modified — Note 1 to entry has been added.]

© ISO 2014 – All rights reserved

Documents
Document Sharing Hub
Full document details: BS ISO 21308-5:2014

3.25.3
stabilizer beam
part of the base where the stabilizers are attached

3.25.4
stabilizer foot
part of a stabilizer leg in contact with the ground

3.26
total lifting moment
sum of the load moment and the moment produced by dead loads

[SOURCE: ISO 15442:2005, 3.1.34]

4 Coding principles

4.1 BEP codes of loader cranes

Each characteristic, related to the loader cranes and their interfaces to truck chassis, is assigned a code composed of the items given below. A prefix “BEP”, followed by a dash (-), shall be used to avoid confusion with other coding systems.

BEP codes are formatted according to the principles in Table 1.

© ISO 2014 – All rights reserved
Documents
Document Sharing Hub
Full document details: BS ISO 21308-5:2014

Table 1 — BEP coding principles

BEP-ppMccc.n.p.q.s.t		
Item	**Assignment**	**Description**
pp	Bodywork category	pp = **None or 00** for codes related to vehicle chassis (ISO 21308-2 and ISO 21308–3) pp = **01** for codes related to loader cranes (this part of ISO 21308)
M	Measure type	A capital letter, which denotes the type of code: H = z direction, coordinate system in accordance with ISO 4130 L = x direction, coordinate system in accordance with ISO 4130 W = y direction, coordinate system in accordance with ISO 4130 C = coordinate (x,y) or (x,y,z) in the Cartesian coordinate system M = mass (m), or mass point (m,x,y,z) F = force (static or dynamic) T = moment (static or dynamic) R = radius V = angle G = general A = administrative
ccc	BEP code number	Code number given by the standard
.n	Index number	.n is used to designate object number n
.p	Entity number	.p is used to designate a certain set of object characteristics or entities (e.g. dimensions, coordinates, address information) Where both .n and .p are specified, they are given in the .n .p order.
.q	Corner number	.q is used to designate contour corner index number
.s	Side designator	L or R
.t	Type designator	Not used in this part of ISO 21308

NOTE 1 Dimensions, except for radius, can be positive or negative.

NOTE 2 This part of ISO 21308 contains BEP codes for coding one loader crane on one truck. More cranes can be applied to the same truck by applying independent instances of coding.

4.2 Units of BEP code values

The following units are preferred when reporting values related to BEP codes (see also ISO/PAS 21308-1):

— dimensions (L, W, H, R) and coordinates (x,y,z), in millimetres (mm);

— masses, in kilograms (kg);

— forces, in newtons (N), or kilonewtons (kN);

— moments, in newton-metres (N·m), or kN·m;

— angles, in degrees (°).

NOTE Guidance on units is shown in the unit column.

© ISO 2014 – All rights reserved

Documents
Document Sharing Hub
Full document details: BS ISO 21308-5:2014

4.3 References for measurements

4.3.1 Global coordinate system (X,Y,Z)

A vehicle coordinate system according to Figure 2 is applied. Global coordinates for the vehicle are denominated X, Y, and Z (uppercase letters).

Origin is on top of the chassis frame, straight above the first front axle, and at the chassis centre line.

NOTE The vehicle coordinate system used in this part of ISO 21308 is fully in line with ISO 4130, but applied on a truck.

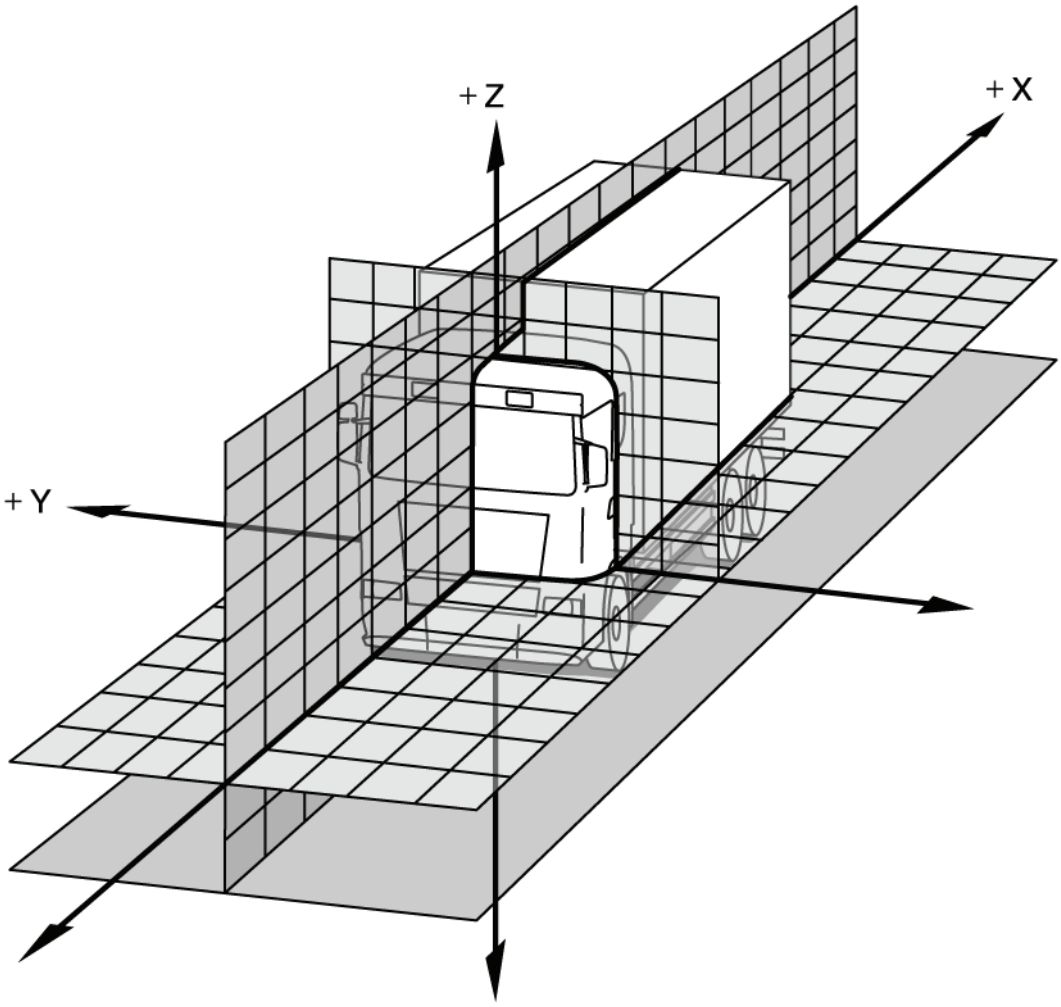

Figure 2 — Vehicle coordinate system according to ISO 4130, applied on a truck (commercial vehicle)

4.3.2 Local crane coordinate system

For a default mounting position, the principle should be that the crane coordinate directions should coincide with those of the vehicle. Local crane coordinates are denominated x, y, and z (lowercase letters). See Figure 3.

© ISO 2014 – All rights reserved
Documents
Document Sharing Hub
Full document details: BS ISO 21308-5:2014

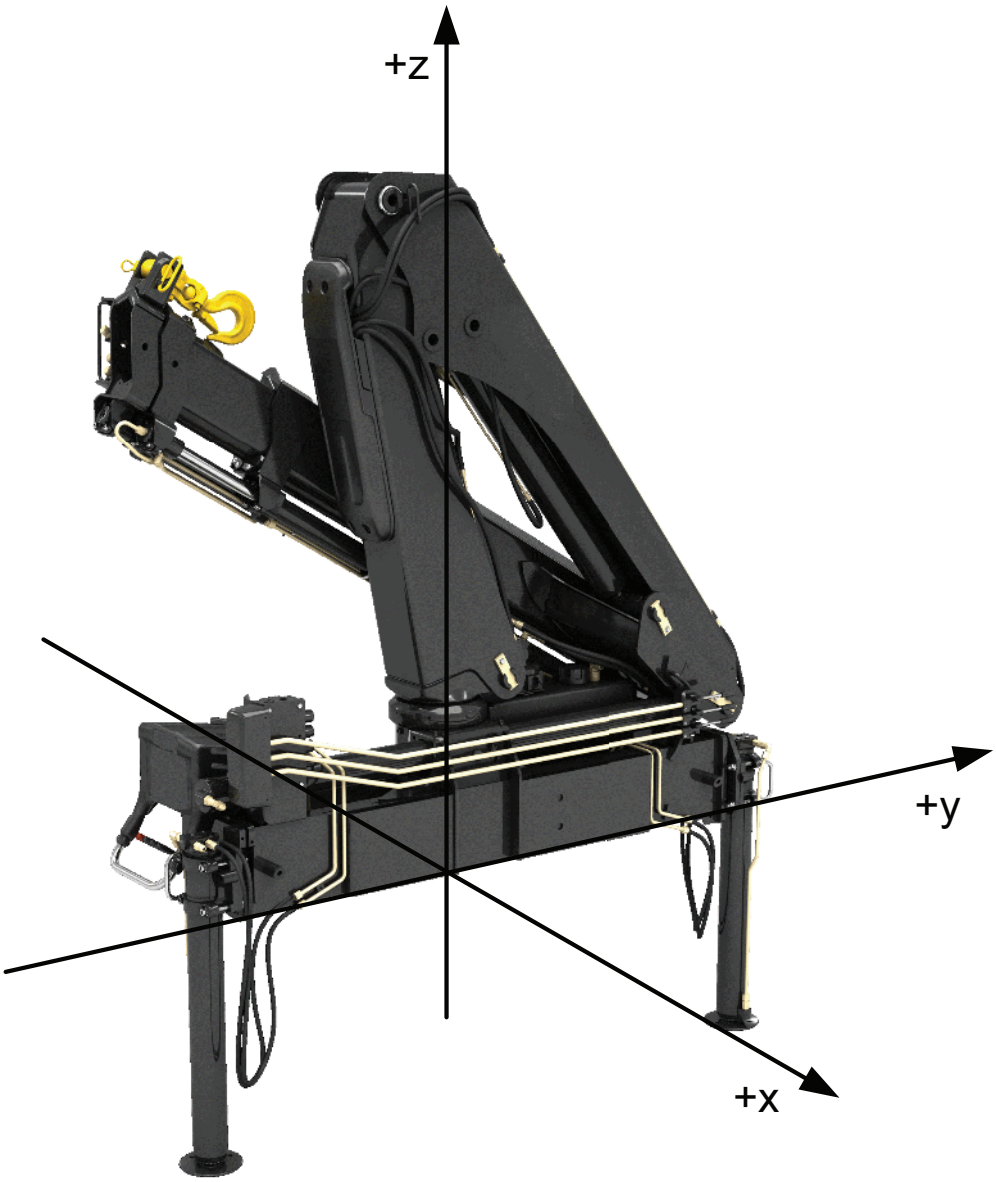

Figure 3 — Local crane coordinate system, general principle

The origin of the crane coordinate system (referred to as zero point in this part of ISO 21308) is the point where the crane slewing axis intersects with the mounting plane of the crane.

According to EN 12999, the longitudinal position (local x = 0) of the slewing centre shall be clearly marked on both sides of the crane base.

The crane orientation with respect to the positioning of boom system and stabilizers can be orientated according to either of the principles shown in Figure 4. The default crane orientation can be either of the two cases shown in Figure 4.

© ISO 2014 – All rights reserved

Documents
Document Sharing Hub
Full document details: BS ISO 21308-5:2014

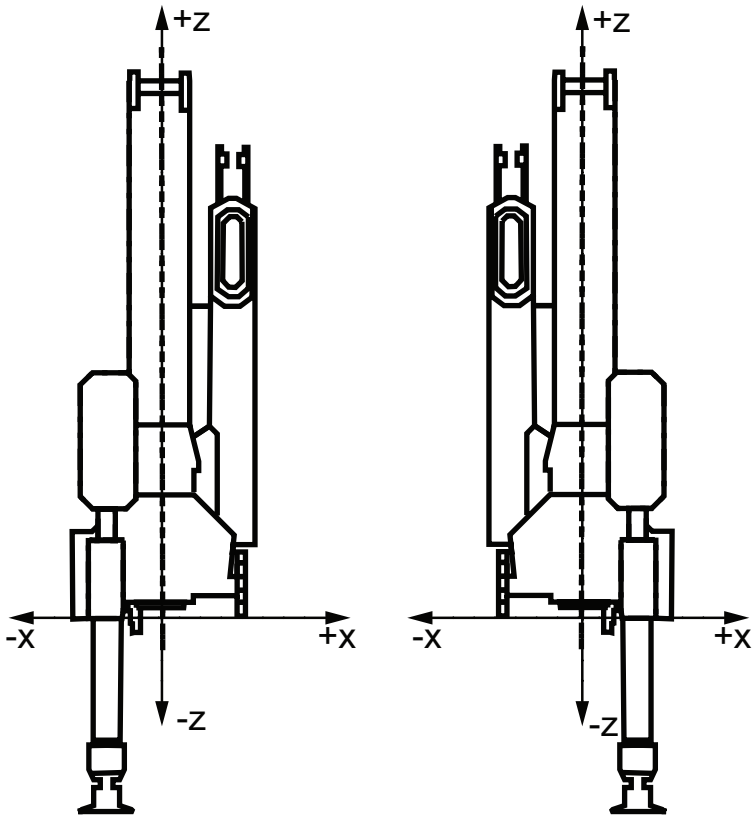

Figure 4 — Loader crane orientation with respect to positioning of boom system and stabilizers

The crane manufacturer decides the most appropriate orientation of the crane coordinate system in line with the conventions given above.

4.3.3 Local auxiliary stabilizer coordinate system

For a default mounting position, the principle should be that the auxiliary stabilizer coordinate directions should coincide with those of the vehicle. Local auxiliary stabilizer coordinates are denominated x, y, and z (lowercase letters). See Figure 5.

© ISO 2014 – All rights reserved
Documents
Document Sharing Hub
Full document details: BS ISO 21308-5:2014

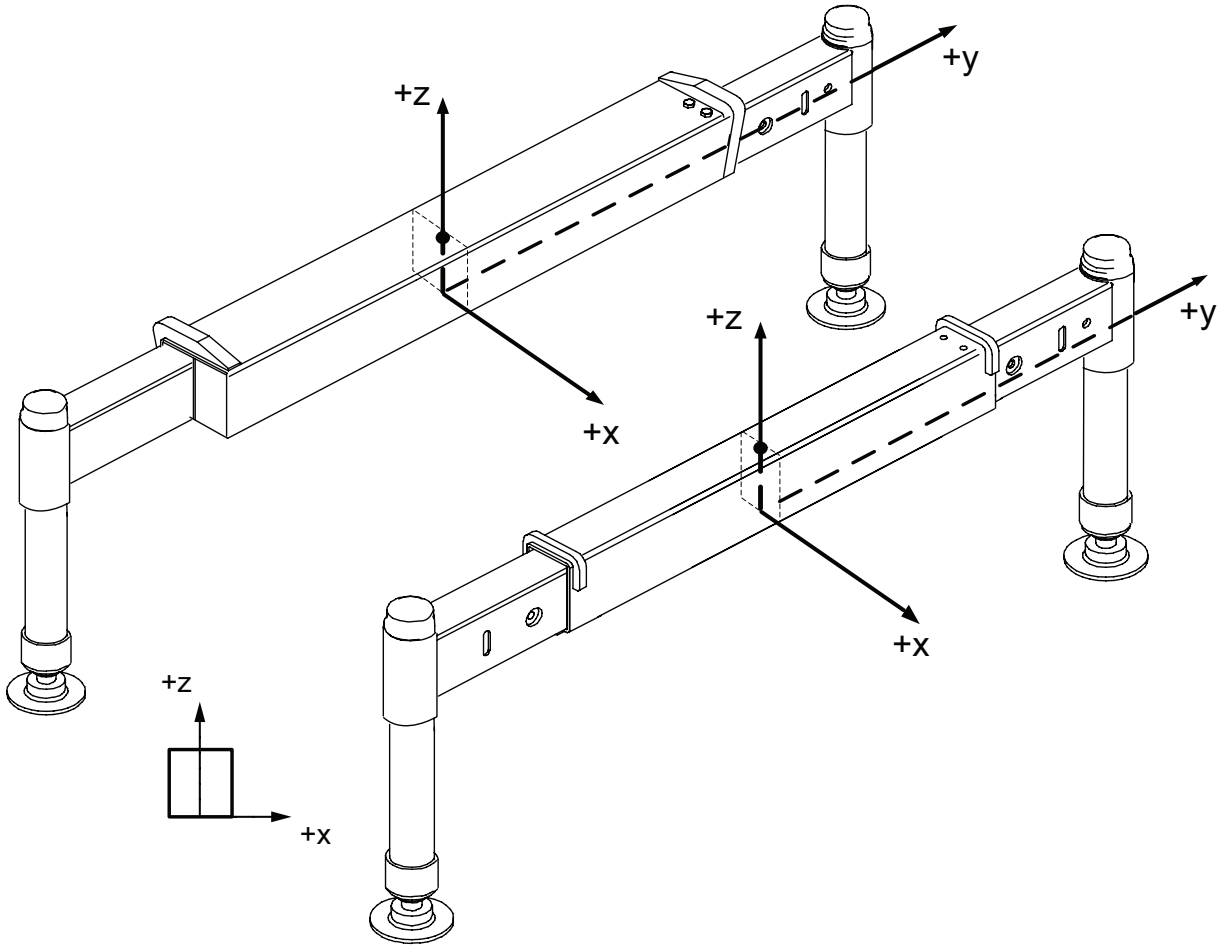

Figure 5 — Local stabilizer coordinate system, general principle

The origin of the auxiliary stabilizer coordinate system (referred to as zero point in this part of ISO 21308) is defined by the following:

— local x =0:, centre of stabilizer extensions for in-line extensions, centre between stabilizer extensions for off-centre stabilizer extensions;

— local y = 0: at half of the width of the stabilizer beam;

— local z = 0: at the lower mounting plane (used when stabilizers are mounted on top of chassis frame).

The orientation of the *x*-axis may be as shown in Figure 5 or in the reverse direction. The manufacturer decides the most appropriate orientation of the auxiliary stabilizer coordinate system with respect to the direction of the *x*-axis.

4.3.4 Transformation of local coordinates for loader cranes

Loader cranes and auxiliary stabilizers may be mounted in various positions (e.g. behind cabin, or at the rear) and with different orientations.

When the loader crane is mounted on a vehicle, its local coordinate system needs to be transformed to the directions of the global coordinate system. The transformed coordinates are x', y', and z' (lowercase letters with an apostrophe). See Figure 6.

© ISO 2014 – All rights reserved

Documents
Document Sharing Hub
Full document details: BS ISO 21308-5:2014