BS ISO 21308-6:2018

BSI Standards Publication

Road vehicles — Product data exchange between chassis and bodywork manufacturers (BEP)

Part 6: Coding of hook loader bodywork

Documents
Document Sharing Hub

Full document details: BS ISO 21308-6:2018

National foreword

This British Standard is the UK implementation of ISO 21308-6:2018.

The UK participation in its preparation was entrusted to Technical Committee AUE/13, Commercial and public service vehicles.

A list of organizations represented on this committee can be obtained on request to its secretary.

This publication does not purport to include all the necessary provisions of a contract. Users are responsible for its correct application.

© The British Standards Institution 2018
Published by BSI Standards Limited 2018

ISBN 978 0 580 91218 4

ICS 43.080.01

Compliance with a British Standard cannot confer immunity from legal obligations.

This British Standard was published under the authority of the Standards Policy and Strategy Committee on 31 October 2018.

Amendments/corrigenda issued since publication

Date	Text affected

Documents
Document Sharing Hub

Full document details: BS ISO 21308-6:2018

INTERNATIONAL STANDARD

ISO 21308-6

First edition
2018-10

Road vehicles — Product data exchange between chassis and bodywork manufacturers (BEP) —

Part 6: Coding of hook loader bodywork

Véhicules routiers — Echange de données de produit entre les fabricants de châssis et de carrosseries (BEP) —

Partie 6: Codage des bras hydrauliques pour bennes amovibles

Reference number
ISO 21308-6:2018(E)

Documents
Document Sharing Hub
© ISO 2018

Full document details: BS ISO 21308-6:2018

COPYRIGHT PROTECTED DOCUMENT

© ISO 2018

All rights reserved. Unless otherwise specified, or required in the context of its implementation, no part of this publication may be reproduced or utilized otherwise in any form or by any means, electronic or mechanical, including photocopying, or posting on the internet or an intranet, without prior written permission. Permission can be requested from either ISO at the address below or ISO's member body in the country of the requester.

ISO copyright office
CP 401 • Ch. de Blandonnet 8
CH-1214 Vernier, Geneva
Phone: +41 22 749 01 11
Fax: +41 22 749 09 47
Email: copyright@iso.org
Website: www.iso.org

Published in Switzerland

© ISO 2018 – All rights reserved

Documents
Document Sharing Hub

Full document details: BS ISO 21308-6:2018

Contents

Page

Foreword ... **iv**
Introduction ... **v**
1 Scope ... **1**
2 Normative references ... **1**
3 Terms and definitions ... **1**
4 Coding principles ... **3**
4.1 BEP codes of bodywork for hook loaders ... 3
4.2 Units of BEP code values ... 3
4.3 References for measurements ... 4
4.3.1 Global coordinate system (X, Y, Z) ... 4
4.3.2 Hook loader coordinate system ... 4
4.4 Related XML coding ... 6
5 Coding of geometrical data and space requirements ... **7**
5.1 Installation of hook loader on vehicle ... 7
5.2 Main dimensions hook loaders ... 9
5.2.1 Transport position ... 9
5.2.2 Tipping/dumping position ... 12
5.2.3 Loading/unloading position ... 14
6 Coding of container dimensions and features necessary for the handling ... **17**
7 Coding of masses ... **20**
7.1 Mass point in transport position ... 20
7.2 Mass point in working position ... 21
7.3 Mass point for container ... 23
8 Coding of general hook loader data ... **23**
8.1 General hook loader data ... 23
8.2 Mechanical interfaces to truck ... 24
8.3 Mechanical interfaces to container ... 24
8.4 Hydraulics equipment and interfaces ... 24
8.5 Electrical/electronic equipment and interfaces ... 24
Annex A (normative) **XML coding related to this document** ... **25**
Annex B (informative) **Overview of container frame dimensions** ... **27**
Bibliography ... **32**

© ISO 2018 – All rights reserved

Documents
Document Sharing Hub
Full document details: BS ISO 21308-6:2018

Foreword

ISO (the International Organization for Standardization) is a worldwide federation of national standards bodies (ISO member bodies). The work of preparing International Standards is normally carried out through ISO technical committees. Each member body interested in a subject for which a technical committee has been established has the right to be represented on that committee. International organizations, governmental and non-governmental, in liaison with ISO, also take part in the work. ISO collaborates closely with the International Electrotechnical Commission (IEC) on all matters of electrotechnical standardization.

The procedures used to develop this document and those intended for its further maintenance are described in the ISO/IEC Directives, Part 1. In particular, the different approval criteria needed for the different types of ISO documents should be noted. This document was drafted in accordance with the editorial rules of the ISO/IEC Directives, Part 2 (see www.iso.org/directives).

Attention is drawn to the possibility that some of the elements of this document may be the subject of patent rights. ISO shall not be held responsible for identifying any or all such patent rights. Details of any patent rights identified during the development of the document will be in the Introduction and/or on the ISO list of patent declarations received (see www.iso.org/patents).

Any trade name used in this document is information given for the convenience of users and does not constitute an endorsement.

For an explanation of the voluntary nature of standards, the meaning of ISO specific terms and expressions related to conformity assessment, as well as information about ISO's adherence to the World Trade Organization (WTO) principles in the Technical Barriers to Trade (TBT) see www.iso.org/iso/foreword.html.

This document was prepared by Technical Committee ISO/TC 22, *Road vehicles*, Subcommittee SC 40, *Specific aspects for light and heavy commercial vehicles, busses and trailers*.

Any feedback or questions on this document should be directed to the user's national standards body. A complete listing of these bodies can be found at www.iso.org/members.html.

A list of all parts in the ISO 21308 series can be found on the ISO website.

© ISO 2018 – All rights reserved
Documents
Document Sharing Hub
Full document details: BS ISO 21308-6:2018

Introduction

Based on the ISO BEP (bodywork exchange parameters) system, this document specifically deals with the coding of dimensions and other characteristics of hook loaders. The aim is to ensure an efficient and unambiguous communication of dimensional installation data between the parties involved.

The document also covers coding of characteristics of hydraulic, electrical and electronic interfaces to the vehicle.

The document is useful for all parties involved in the installation of hook loaders to vehicles, e.g. hook loader manufacturers, truck chassis manufacturers, and bodywork manufacturers.

© ISO 2018 – All rights reserved

Documents
Document Sharing Hub
Full document details: BS ISO 21308-6:2018

Documents
Document Sharing Hub

Road vehicles — Product data exchange between chassis and bodywork manufacturers (BEP) —

Part 6: Coding of hook loader bodywork

1 Scope

This document series describes a generic system for the exchange of data between truck chassis manufacturers and bodywork manufacturers. It applies to commercial vehicles as defined in ISO 3833, having a maximum gross vehicle mass above 3 500 kg.

The process of exchanging the above information can involve:

— chassis manufacturer;

— chassis importer;

— chassis dealer;

— one or more bodywork manufacturers; and

— bodywork component suppliers, e.g. manufacturers of demountable bodies, cranes and loading equipment, tipping equipment.

This document specifically deals with the coding of dimensions and other characteristics of hook loaders, to ensure an efficient and unambiguous communication of installation data between the parties involved.

2 Normative references

The following documents are referred to in the text in such a way that some or all of their content constitutes requirements of this document. For dated references, only the edition cited applies. For undated references, the latest edition of the referenced document (including any amendments) applies.

ISO 21308-1, *Road vehicles — Product data exchange between chassis and bodywork manufacturers (BEP) — Part 1: General principles*

ISO 21308-2, *Road vehicles — Product data exchange between chassis and bodywork manufacturers (BEP) — Part 2: Dimensional bodywork exchange parameters*

ISO 21308-3, *Road vehicles — Product data exchange between chassis and bodywork manufacturers (BEP) — Part 3: General, mass and administrative exchange parameters*

3 Terms and definitions

For the purposes of this document the terms and definitions given in ISO 21308-2 and the following apply.

ISO and IEC maintain terminological databases for use in standardization at the following addresses:

— IEC Electropedia: available at http://www.electropedia.org/

— ISO Online browsing platform: available at https://www.iso.org/obp

© ISO 2018 – All rights reserved

Documents
Document Sharing Hub
Full document details: BS ISO 21308-6:2018

3.1
hook loader
hook lift
vehicle or trailer mounted powered equipment comprising of a hook arm column that can move longitudinally in a telescopic and articulated path, designed for loading, unloading and tipping containers and other demountables equipped with hook lift frames

Note 1 to entry: Both expressions (hook loader and hook lift) are used worldwide. In this document, the term hook loader is used.

Note 2 to entry: Figure 1 shows the main parts of a hook loader referred to in this document.

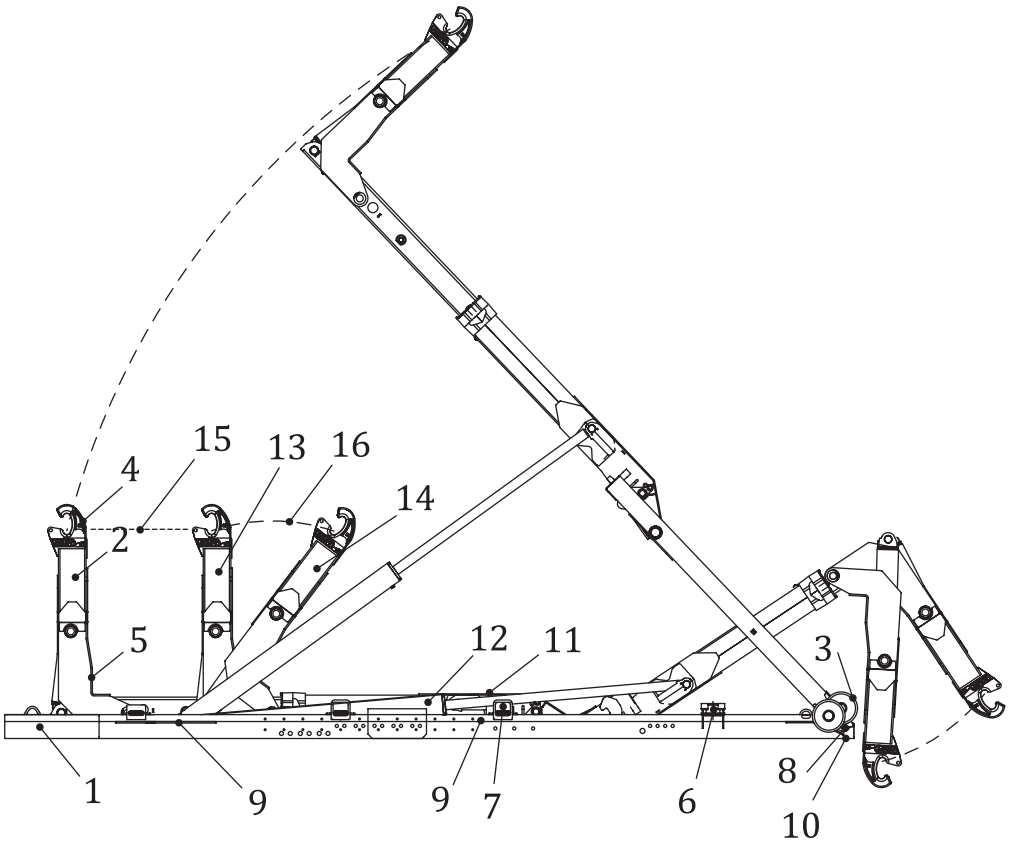

Key

1	hook loader subframe	9	container load bed
2	hook arm	10	reference point
3	rear roller	11	middle frame highest point
4	hook	12	main cylinder
5	push-back block	13	non-articulated hook arm
6	container locking mechanism	14	articulated hook arm
7	container support	15	telescopic movement
8	tipping pivot point	16	articulation movement

Figure 1 — Main parts and characteristics of hook loader

© ISO 2018 – All rights reserved
Documents
Document Sharing Hub
Full document details: BS ISO 21308-6:2018

4 Coding principles

4.1 BEP codes of bodywork for hook loaders

Each characteristic, related to the hook loader and its interfaces to truck chassis, is assigned a code composed of the items given below. A prefix "BEP", followed by a dash (-), shall be used to avoid confusion with other coding systems.

BEP codes are formatted according to the principles in Table 1.

Table 1 — BEP coding principles

BEP-ppMccc.n.p.q.s.t		
Item	**Assignment**	**Description**
pp	Bodywork category	pp = **None or 00** for codes related to vehicle chassis (ISO 21308-2 and ISO 21308-3) pp = **01** for codes related to loader cranes (ISO 21308-5) pp = **02** for codes related to hook loaders (ISO 21308-6) pp = **03** for codes related to skip loaders (ISO 21308-7) Future parts of the ISO 21308 series may introduce new pp numbers.
M	Measure type	A capital letter, which denotes the type of code: H = Z direction, coordinate system in accordance with ISO 4130 L = X direction, coordinate system in accordance with ISO 4130 W = Y direction, coordinate system in accordance with ISO 4130 C = Coordinate (x,y) or (x,y,z) in the Cartesian coordinate system R = Radius V = Angle M = Mass (m), or mass point (m,x,y,z) F = Force (static or dynamic) T = Moment (static or dynamic) G = General A = Administrative
ccc	BEP code number	Code number given by the standard
.n	Index number	.n is used to designate object number n
.p	Entity number	.p is used to designate a certain set of object characteristics or entities (e.g. dimensions, coordinates, address information) Where both .n and .p are specified, they are given in the .n .p order.
.q	Corner number	.q is used to designate contour corner index number
.s	Side designator	L or R
.t	Type designator	.t is used to designate a certain type (e.g. "Rigid" or "Flexible")

NOTE Dimensions, except for radius, can be positive or negative.

4.2 Units of BEP code values

The following units are preferred when reporting values related to BEP codes (see also ISO 21308-1):

— dimensions (L, W, H, R) and coordinates (x, y, z) in millimetres (mm);

— masses in kilograms (kg);

© ISO 2018 – All rights reserved

Documents
Document Sharing Hub
Full document details: BS ISO 21308-6:2018

— forces in Newtons (N), or kN;

— moments in Newtonmetres (Nm), or kNm; and

— angles in degrees (°).

NOTE Guidance on units is shown in the unit column for each BEP code.

4.3 References for measurements

4.3.1 Global coordinate system (X, Y, Z)

A vehicle coordinate system according to ISO 4130 is applied, see Figure 2. Global coordinates for the vehicle are denominated X, Y and Z (uppercase letters).

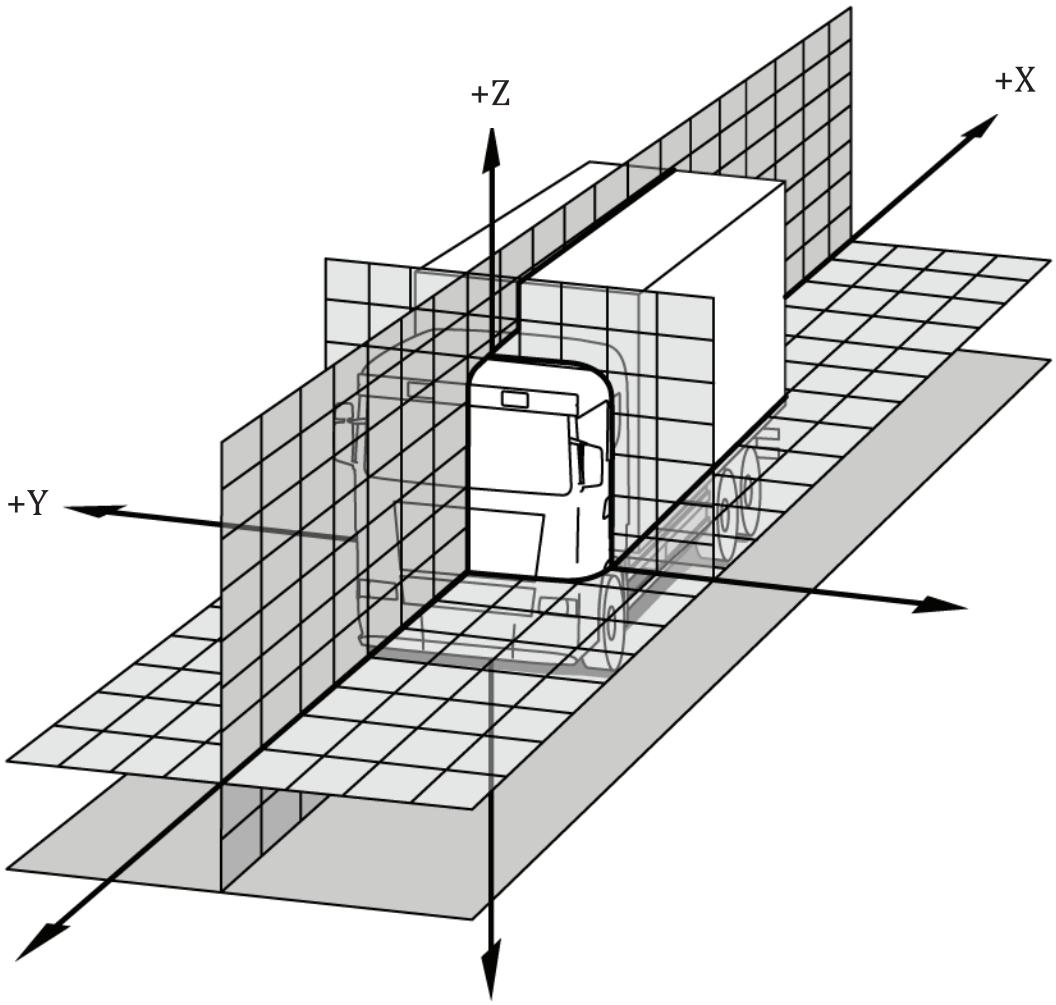

Figure 2 — Vehicle coordinate system according to ISO 4130

4.3.2 Hook loader coordinate system

For a default mounting position, the principle should be that the hook loader coordinate directions should coincide with those of the vehicle. Local bodywork coordinates are denominated x, y and z (lowercase letters), see Figure 3.

© ISO 2018 – All rights reserved
Documents
Document Sharing Hub
Full document details: BS ISO 21308-6:2018

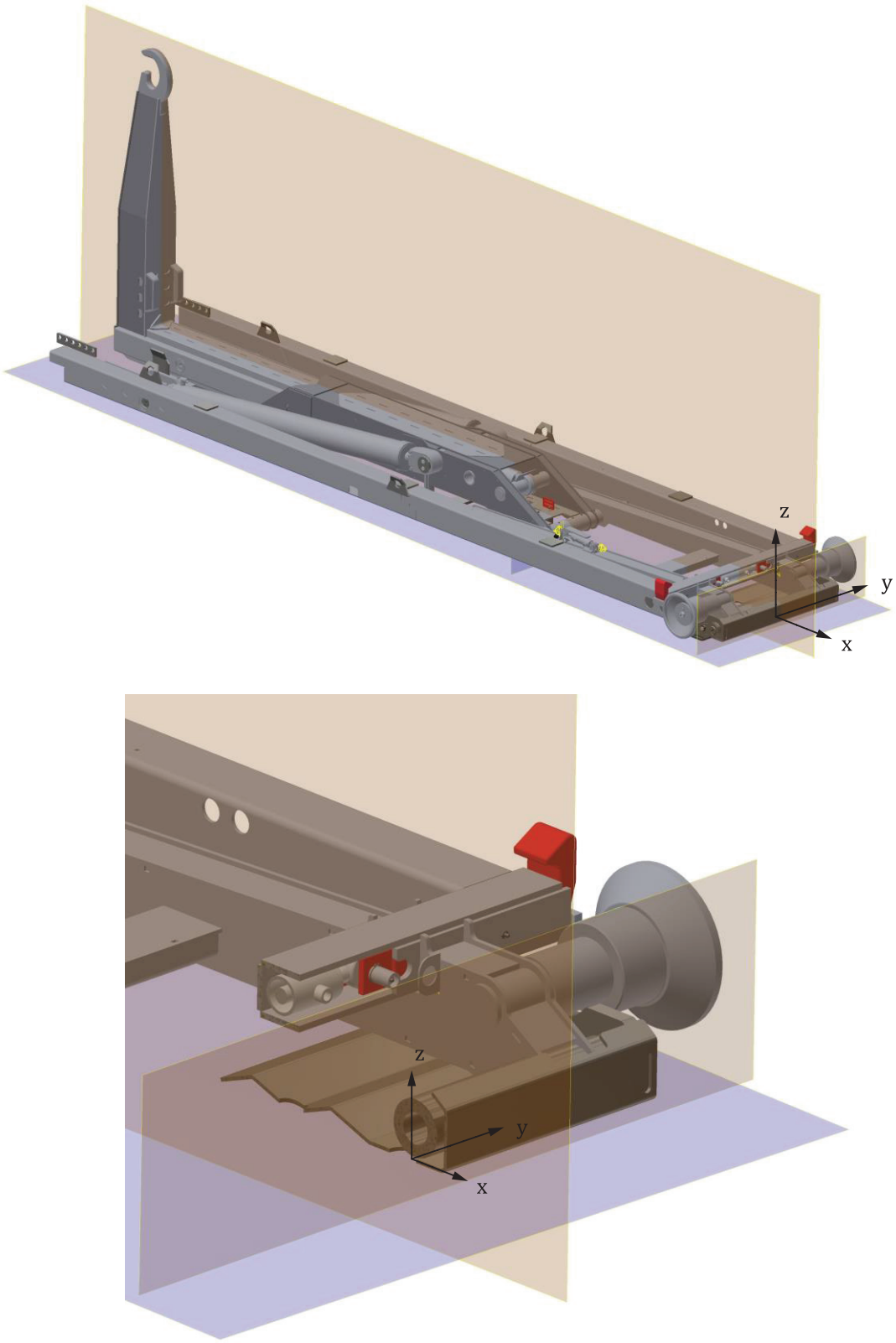

Figure 3 — Local coordinate system for hook loader

The origin of the coordinate system for a hook loader (referred to as zero reference point in this document) is defined by:

— Local x = 0 for the plane through the centre of the tipping shaft;

© ISO 2018 – All rights reserved

Documents
Document Sharing Hub
Full document details: BS ISO 21308-6:2018