BS ISO 21378:2019

BSI Standards Publication

Audit data collection

Documents
Document Sharing Hub

Full document details: BS ISO 21378:2019

National foreword

This British Standard is the UK implementation of ISO 21378:2019.

The UK participation in its preparation was entrusted to Technical Committee SVS/6, Financial services.

A list of organizations represented on this committee can be obtained on request to its secretary.

This publication does not purport to include all the necessary provisions of a contract. Users are responsible for its correct application.

© The British Standards Institution 2019
Published by BSI Standards Limited 2019

ISBN 978 0 580 97132 7

ICS 03.120.20

Compliance with a British Standard cannot confer immunity from legal obligations.

This British Standard was published under the authority of the Standards Policy and Strategy Committee on 30 November 2019.

Amendments/corrigenda issued since publication

Date	Text affected

Documents
Document Sharing Hub

Full document details: BS ISO 21378:2019

INTERNATIONAL STANDARD

ISO 21378

First edition
2019-11

Audit data collection

Collecte des données d'audit

Reference number
ISO 21378:2019(E)

Documents
Document Sharing Hub

© ISO 2019

Full document details: BS ISO 21378:2019

COPYRIGHT PROTECTED DOCUMENT

© ISO 2019

All rights reserved. Unless otherwise specified, or required in the context of its implementation, no part of this publication may be reproduced or utilized otherwise in any form or by any means, electronic or mechanical, including photocopying, or posting on the internet or an intranet, without prior written permission. Permission can be requested from either ISO at the address below or ISO's member body in the country of the requester.

ISO copyright office
CP 401 • Ch. de Blandonnet 8
CH-1214 Vernier, Geneva
Phone: +41 22 749 01 11
Fax: +41 22 749 09 47
Email: copyright@iso.org
Website: www.iso.org

Published in Switzerland

© ISO 2019 – All rights reserved

Documents
Document Sharing Hub

Full document details: BS ISO 21378:2019

Contents

Page

Foreword ... **vi**
Introduction ... **vii**
1 Scope ... **1**
2 Normative references ... **1**
3 Terms and definitions ... **1**
4 Modules, tables and fields ... **3**
4.1 General ... 3
4.2 Naming conventions ... 4
4.3 Representation and datatype of data elements ... 6
4.4 Base module ... 8
4.4.1 General ... 8
4.4.2 BAS_Business_Segment ... 8
4.4.3 BAS_Business_Segment_Hierarchy ... 8
4.4.4 BAS_Employee ... 9
4.4.5 BAS_User ... 10
4.4.6 BAS_Customer_Type ... 11
4.4.7 BAS_Customer ... 12
4.4.8 BAS_Supplier_Type ... 15
4.4.9 BAS_Supplier ... 16
4.4.10 BAS_Chart_Of_Accounts ... 18
4.4.11 BAS_Accounting_Period ... 20
4.4.12 BAS_Journal_Entry_Type ... 20
4.4.13 BAS_Bill_Type ... 21
4.4.14 BAS_Settlement_Method ... 22
4.4.15 BAS_Currency ... 22
4.4.16 BAS_Measurement_Unit ... 23
4.4.17 BAS_Payment_Term ... 24
4.4.18 BAS_Project ... 24
4.4.19 BAS_Bank_Account ... 25
4.4.20 BAS_Tax_Regulatory ... 26
4.4.21 BAS_Tax_Type ... 27
4.4.22 BAS_Customized_ACC_Segment ... 28
4.4.23 BAS_Customized_ACC_Value ... 29
4.4.24 BAS_Profile ... 30
4.4.25 Base standard data questionnaire ... 32
4.5 General Ledger module ... 33
4.5.1 General ... 33
4.5.2 GL_Trial_Balance ... 34
4.5.3 GL_Details ... 37
4.5.4 GL_Source ... 42
4.5.5 GL_Account_Segment ... 43
4.5.6 GL_Accounts_Period_Balance ... 45
4.5.7 GL standard data profiling report ... 48
4.5.8 GL standard data questionnaire ... 49
4.6 Accounts Receivable module ... 50
4.6.1 General ... 50
4.6.2 AR_Open_Accounts_Receivable ... 51
4.6.3 AR_Cash_Received ... 55
4.6.4 AR_Cash_Application ... 59
4.6.5 AR_Adjustments ... 62
4.6.6 AR_Adjustments_Details ... 68
4.6.7 AR standard data profiling report ... 72
4.6.8 AR standard data questionnaire ... 73

© ISO 2019 – All rights reserved

AVA Documents
Document Sharing Hub
Full document details: BS ISO 21378:2019

4.7 Sales module ... 73
4.7.1 General ... 73
4.7.2 SAL_Contracts ... 74
4.7.3 SAL_Contracts_Details ... 76
4.7.4 SAL_Orders ... 79
4.7.5 SAL_Orders_Details ... 81
4.7.6 SAL_Invoices_Generated ... 84
4.7.7 SAL_Invoices_Generated_Details ... 89
4.7.8 SAL_Shipments_Made ... 92
4.7.9 SAL_Shipments_Made_Details ... 95
4.7.10 SAL standard data profiling report ... 97
4.7.11 SAL standard data questionnaire ... 98
4.8 Accounts Payable module ... 99
4.8.1 General ... 99
4.8.2 AP_Open_Accounts_Payable ... 99
4.8.3 AP_Payments_Made ... 103
4.8.4 AP_Cash_Application ... 107
4.8.5 AP_Adjustments ... 111
4.8.6 AP_Adjustments_Details ... 117
4.8.7 AP standard data profiling report ... 121
4.8.8 AP standard data questionnaire ... 122
4.9 Purchase module ... 122
4.9.1 General ... 122
4.9.2 PUR_Requisitions ... 123
4.9.3 PUR_Requisitions_Details ... 124
4.9.4 PUR_Contracts ... 126
4.9.5 PUR_Contracts_Details ... 128
4.9.6 PUR_Orders ... 131
4.9.7 PUR_Orders_Details ... 134
4.9.8 PUR_Invoices_Received ... 138
4.9.9 PUR_Invoices_Received_Details ... 142
4.9.10 PUR_Materials_Received ... 146
4.9.11 PUR_Materials_Received_Details ... 149
4.9.12 PUR standard data profiling report ... 151
4.9.13 PUR standard data questionnaire ... 153
4.10 Inventory module ... 153
4.10.1 General ... 153
4.10.2 INV_Location ... 154
4.10.3 INV_Product_Type ... 155
4.10.4 INV_Product ... 156
4.10.5 INV_On_Hand ... 159
4.10.6 INV_Transaction ... 162
4.10.7 INV_Physical_Inventory ... 167
4.10.8 INV_Period_Balance ... 170
4.10.9 INV standard data profiling report ... 172
4.10.10 INV standard data questionnaire ... 173
4.11 Property, Plant and Equipment module ... 173
4.11.1 General ... 173
4.11.2 PPE_Type ... 174
4.11.3 PPE_Master ... 175
4.11.4 PPE_Addition ... 178
4.11.5 PPE_Removal ... 181
4.11.6 PPE_Change ... 184
4.11.7 PPE_Department_Allocation ... 187
4.11.8 PPE_Depreciation_Method ... 187
4.11.9 PPE_Depreciation ... 188
4.11.10 PPE standard data profiling report ... 191
4.11.11 PPE standard data questionnaire ... 192

© ISO 2019 – All rights reserved
Documents
Document Sharing Hub
Full document details: BS ISO 21378:2019

5 Syntax/technical format ... **193**
5.1 General ... 193
5.2 Characteristics of flat files ... 193
5.3 Extension ... 193
5.4 Conventions of folder naming and file naming ... 193
5.5 Data file format convention in flat files ... 194

6 Transport/handling and versioning ... **195**
6.1 Character encoding conventions ... 195
6.2 Versioning ... 196
6.3 Multi-platform and multi-system data transfer ... 196
6.4 File compression ... 196

Annex A (informative) **Guidance on how to use the business segment table structure to customize the extraction standard for client-specific needs** ... **198**

Annex B (informative) **Guidance on how to use Account Segment** ... **203**

Bibliography ... **207**

© ISO 2019 – All rights reserved

Documents
Document Sharing Hub
Full document details: BS ISO 21378:2019

Foreword

ISO (the International Organization for Standardization) is a worldwide federation of national standards bodies (ISO member bodies). The work of preparing International Standards is normally carried out through ISO technical committees. Each member body interested in a subject for which a technical committee has been established has the right to be represented on that committee. International organizations, governmental and non-governmental, in liaison with ISO, also take part in the work. ISO collaborates closely with the International Electrotechnical Commission (IEC) on all matters of electrotechnical standardization.

The procedures used to develop this document and those intended for its further maintenance are described in the ISO/IEC Directives, Part 1. In particular, the different approval criteria needed for the different types of ISO documents should be noted. This document was drafted in accordance with the editorial rules of the ISO/IEC Directives, Part 2 (see www.iso.org/directives).

Attention is drawn to the possibility that some of the elements of this document may be the subject of patent rights. ISO shall not be held responsible for identifying any or all such patent rights. Details of any patent rights identified during the development of the document will be in the Introduction and/or on the ISO list of patent declarations received (see www.iso.org/patents).

Any trade name used in this document is information given for the convenience of users and does not constitute an endorsement.

For an explanation of the voluntary nature of standards, the meaning of ISO specific terms and expressions related to conformity assessment, as well as information about ISO's adherence to the World Trade Organization (WTO) principles in the Technical Barriers to Trade (TBT) see www.iso.org/iso/foreword.html.

This document was prepared by Project Committee ISO/PC 295, *Audit data collection*.

Any feedback or questions on this document should be directed to the user's national standards body. A complete listing of these bodies can be found at www.iso.org/members.html.

© ISO 2019 – All rights reserved
Documents
Document Sharing Hub
Full document details: BS ISO 21378:2019

Introduction

Accounting and Enterprise Resource Planning (ERP) software packages are widely used in businesses and by various government organizations to manage and track business processes, post transactions and produce financial reports. Because of the nature of the information contained within the ERP systems, the data are also leveraged by internal and external auditors to assess the business controls, processes and financial reporting. There are numerous ERP packages that are used by businesses and government organizations, which can vary greatly in design (e.g. interfaces, data content, data formats, operational reports, management reports, financial reports). These and other design differences present challenges in the collection of data for auditing supervision management purposes.

This document aims to resolve the common problems that auditors face when requesting data to perform their audit procedures. The information contained within this document will help to improve the accessibility and transparency of audit data, standardize the process of collecting audit data, avoid duplicate efforts and save resources. The worldwide standardization of audit data content and formats will enhance the effectiveness and efficiency of government, internal and external audits, and provide benefits to related stakeholders.

This document focuses on major business modules of accounting and ERP systems that are typically used in various organizations. These modules relate to major business processes, including the areas of purchase, sales, inventory, fixed assets and financial reporting, with the aim to identify and specify the data elements and file formats needed for auditing.

This document facilitates the use of analytics and enables regulatory bodies to better fulfil their supervision responsibilities, external auditors to better perform their tasks of assurance, and internal auditors to assist management in making more informed decisions.

The clauses in this document, including the Base (see 4.4), General Ledger (see 4.5), Accounts Receivable (see 4.6), Sales (see 4.7), Accounts Payable (see 4.8), Purchase (see 4.9), Inventory (see 4.10) and Property, Plant and Equipment (see 4.11) modules:

— provide guidelines and specifications for obtaining accounting data;

— define the content requirements of accounting data elements (e.g. fields and tables grouped into modules);

— define the format requirements of data elements;

— specify data interface output files;

— provide thoughts for customizing the standard to meet the needs of the business structure and process variances that can occur in some organizations.

© ISO 2019 – All rights reserved

Documents
Document Sharing Hub
Full document details: BS ISO 21378:2019

Documents
Document Sharing Hub

Full document details: BS ISO 21378:2019

Audit data collection

1 Scope

This document establishes common definitions of accounting data elements and provides the information necessary to extract relevant audit data.

NOTE For the purpose of this document, "audit" refers to an examination of an entity's financial and financial related records in order to check that they are fairly presented.

This document is applicable to the bridging of understanding among auditors, auditees, software developers and IT professionals, and creating a mechanism for expressing the information, common to accounting, in a manner independent of accounting and ERP systems. This document serves as a foundation for local data extraction efforts in the areas of general ledger, accounts receivable, sales, accounts payable, purchase, inventory, and property, plant and equipment.

2 Normative references

The following documents are referred to in the text in such a way that some or all of their content constitutes requirements of this document. For dated references, only the edition cited applies. For undated references, the latest edition of the referenced document (including any amendments) applies.

ISO 3166-1, *Codes for the representation of names of countries and their subdivisions — Part 1: Country codes*

ISO 3166-2, *Codes for the representation of names of countries and their subdivisions — Part 2: Country subdivision code*

ISO 4217, *Codes for the representation of currencies*

ISO 8601-1, *Date and time — Representations for information interchange — Part 1: Basic rules*

ISO 9362, *Banking — Banking telecommunication messages — Business identifier code (BIC)*

ISO/IEC 14957:2010, *Information technology — Representation of data element values — Notation of the format*

ISO 17442, *Financial services — Legal entity identifier (LEI)*

3 Terms and definitions

For the purposes of this document, the following terms and definitions apply.

ISO and IEC maintain terminological databases for use in standardization at the following addresses:

— ISO Online browsing platform: available at https://www.iso.org/obp

— IEC Electropedia: available at http://www.electropedia.org/

3.1
data
set of values of qualitative or quantitative variables

3.2
accounting data
transactions from ledgers and journals that support the financial statements

© ISO 2019 – All rights reserved

Documents
Document Sharing Hub
Full document details: BS ISO 21378:2019

3.3
data element
basic unit of identifiable and definable *data* (3.1)

[SOURCE: ISO 2146:2010, 3.4, modified — The admitted term "element" has been deleted.]

3.4
data file
collection of *data* (3.1) records having a homogeneous structure

[SOURCE: ISO 14825:2011, 3.1.2, modified — The word "related" and the note to entry have been deleted.]

3.5
data interface
set of rules that related two independent systems in a way that allows cross-system interactions

3.6
data profiling
activities that are performed to understand the *data structures* (3.8) and system rules that affect the extraction of audit *data* (3.1)

3.7
data questionnaire
supplemental information related to the system or auditee

3.8
data structure
framework comprising a number of *data elements* (3.3) in a prescribed form

[SOURCE: ISO 21007-1:2005, 2.16, modified —"element" has been deleted from the term.]

3.9
primary key
minimum set of attributes that uniquely specify a record in a table

3.10
reference identifier
foreign key
<in a relation> one or a group of attributes that corresponds to a *primary key* (3.9) in another relation

[SOURCE: ISO/IEC 20944-1:2013, 3.14.4.15, modified — The preferred term "reference identifier" has been added.]

3.11
functional currency
medium of exchange of value, defined by reference to the geographical location of the monetary authorities responsible for it, of the primary economic environment in which the entity operates

[SOURCE: ISO 4217:2015, 3.2, modified — "functional" has been added in the term and "of the primary economic environment in which the entity operates" has been added at the end of the definition.]

3.12
local currency
medium of exchange of value, defined by reference to the geographical location of the monetary authorities responsible for it, of the local economic environment in which a distinct and separable business unit is physically located, but not necessarily the economic environment where it operates

[SOURCE: ISO 4217:2015, 3.2, modified — "local" has been added to the term and the text after the second comma has been added to the end of the definition.]

© ISO 2019 – All rights reserved
Documents
Document Sharing Hub
Full document details: BS ISO 21378:2019

3.13
reporting currency
medium of exchange of value, defined by reference to the geographical location of the monetary authorities responsible for it, in which financial statements are presented

[SOURCE: ISO 4217:2015, 3.2, modified — "reporting" has been added to the term and the text after the second comma has been added to the end of the definition.]

3.14
transaction currency
medium of exchange of value, defined by reference to the geographical location of the monetary authorities responsible for it, for exchange or transfer of goods, services or funds

[SOURCE: ISO 4217:2015, 3.2, modified — "transaction" has been added to the term and the text after the second comma has been added to the end of the definition.]

3.15
process flow
depiction of the steps in an accounting workflow, including the related *data* (3.1) and activities

3.16
syntax
set of rules, principles and processes that govern the *data structure* (3.8)

4 Modules, tables and fields

4.1 General

The Audit Data Collection Standard (ADCS) covers the main business modules of accounting and ERP systems and the main business processes in the enterprise production supply chain. The ADCS has eight modules: Base (BAS), General Ledger (GL), Accounts Receivable (AR), Sales (SAL), Purchase (PUR), Accounts Payable (AP), Inventory (INV) and Property, Plant and Equipment (PPE). According to the information system condition, the ADCS supports collecting information from either partial modules or all of them.

The modules within this document and select business events that demonstrate interaction points between the modules are shown in Figure 1. Note that the connectors for the interactions are high level representations and are not meant to depict all related attributes. Data transmission is defined as a process in which the data of business modules could be transformed into general ledger.

© ISO 2019 – All rights reserved

Documents
Document Sharing Hub
Full document details: BS ISO 21378:2019

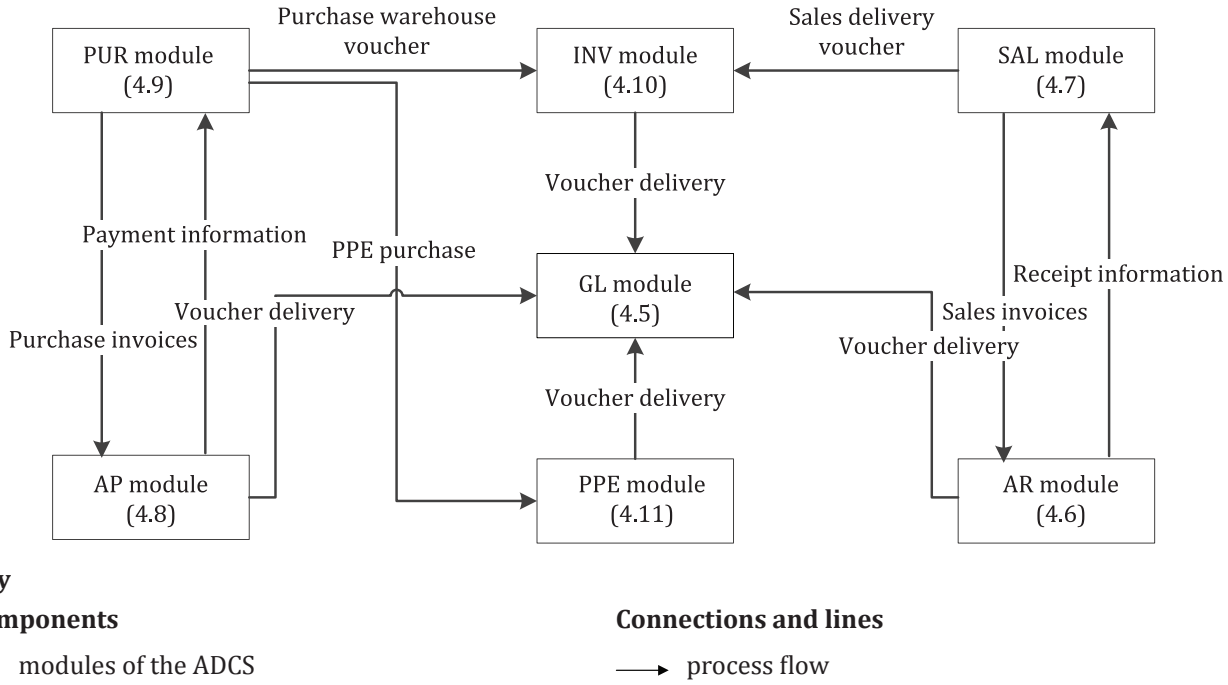

Figure 1 — Business modules in the ADCS

There is a total of 71 tables specifying data elements with structures in the ADCS: 52 tables are level 1 and 19 tables are level 2. The designation difference is based on the use of the information by auditors. Level 1 tables are defined as tables containing information the auditor should leverage when auditing. However, depending on the system, this information may not be available. The level 2 table designation indicates that these tables contain information that the auditor can leverage if the scope of the audit requires this type of data.

Within each table, fields are also labelled as level 1 or level 2. Similarly to the table designations, level 1 fields are defined as fields containing information the auditor should leverage when auditing and where the data are available within the system. The level 2 field designation indicates that these fields contain information that the auditor can leverage if the scope of the audit requires this type of data.

There are situations where level 2 tables contain level 1 fields. This scenario indicates that this type of information may not be needed in some audit situations. However, if the data in the table are deemed to be required by the auditor, the level 1 fields within the level 2 table should be included as they are key fields for the use of the information. Additional information for dealing with fields not available is presented in 5.5.

A questionnaire, located at the end of each module, includes supplemental questions about the data that are essential for an understanding of the use of the data. The answers to the questionnaire are commonly provided by accounting or finance personnel, with input from IT personnel.

4.2 Naming conventions

The naming conventions aim to help readers to have a clear understanding of each table and data element. They also conform to the requirements of major accounting and ERP systems and databases. The following generic conventions are applied to all names for tables and data elements.

a) The length of the table and data element name shall be no more than 30 characters.

b) The abbreviation will be used if the length of a table name or element name is longer than 30 characters. International commonly used abbreviations are allowed, such as ERP.

© ISO 2019 – All rights reserved
Documents
Document Sharing Hub
Full document details: BS ISO 21378:2019

c) Underline is used to separate words in a table name and data element name. Each table name and data element name shall contain only alpha-numeric characters and the underline characters.

d) The first letter of each word in the table name and data element name shall be in upper case. Any abbreviated term shall be in upper case.

The abbreviated terms used in the ADCS are listed in Table 1.

Table 1 — Abbreviated terms

Abbreviation	Full name
ACC	Account
ADCS	Audit Data Collection Standard
ADJ	Adjustment
AP	Accounts Payable
AR	Accounts Receivable
ASCII	American Standard Code for Information Interchange
BAS	Base
BEG	Beginning
BIC	Business Identifier Code
CFO	Chief Financial Officer
CNY	Chinese Yuan
CRLF	Carriage-Return Line-Feed
CSV	Comma Separated Values
CUR	Currency
CUS	Customer
ERM	Enterprise Resource Management
ERP	Enterprise Resource Planning
EUR	Euro
FIFO	First In, First Out
FOB	Free On Board
FS	Financial Statement
GB	Gigabyte
GL	General Ledger
IBAN	International Bank Account Number
ICBC	Industrial and Commercial Bank of China
ID	Identification
INV	Inventory
IT	Information Technology
JE	Journal Entry
LEI	Legal Entity Identifier
LIFO	Last In, First Out
MS-DOS	Microsoft Disk Operating System
NTFS	New Technology File System
NUM	Number
NY	New York State
ORG	Organization
OS	Operating System
PK	Primary Key

© ISO 2019 – All rights reserved

Documents
Document Sharing Hub
Full document details: BS ISO 21378:2019

Table 1 *(continued)*

Abbreviation	Full name
PO	Purchase Order
PPE	Property, Plant and Equipment
PRV	Province
PUR	Purchase
REF	Reference Identifier
RFC	Request For Comments
SAL	Sales
SAP	Systems Applications and Products in data processing
SQL	Structured Query Language
TB	Terabytes
TIN	Tax Identification Number
TRX	Transactional
UOM	Unit of Measurement
US	United States of America
USD	U.S. Dollars
UTC	Coordinated Universal Time
UTF-8	8-bit Unicode Transformation Format
WIP	Work In Progress

Special naming conventions for table names include:

— each table name contains no more than three underlines;

— each table name is presented as “module (each table belongs) abbreviation + underline + table description”.

Special naming conventions for data elements include:

— each element name contains no more than four underlines;

— words in element name shall appear in normal word order (e.g. modifiers before nouns);

— the last word of element name is the keyword;

— if there is a number in the element name, the number shall be combined with the previous word without underlining. The number shall be expressed as an integer, such as the data element Tax1_Type_Code.

4.3 Representation and datatype of data elements

The representation of a data element defines its length and precision. The representation shall be designed in accordance with ISO/IEC 14957, ISO 4217 and ISO 8601-1. Datatype constrains the value that a data element might take. The ADCS supports the common datatypes of Date, String, Decimal, etc., to facilitate outputting data from a database and importing data into a database.

Each representation is introduced by the character %. The details are listed in Table 2.

© ISO 2019 – All rights reserved
Documents
Document Sharing Hub
Full document details: BS ISO 21378:2019

Table 2 — Representation specifications and samples

Representation	Description
%ns	%ns describes a sequence of characters, of which the maximum length is n. Left justified; no leading or trailing blank spaces. EXAMPLE %6s describes “123”, “123abc”, but not “abcdefg”.
%nc	%nc describes a sequence of characters, of which the length is exactly n. Left justified; no leading or trailing blank spaces; the string length shall be *n*. a) %1c represents an indicator type. b) %3c represents currency. EXAMPLE USD = US dollars, CNY = Chinese yuan. c) %6c represents time zone as “±hh:mm”. EXAMPLE Newfoundland’s time zone = −03:30, Beijing’s time zone = +08:00. d) %8c represents time in 24-hour time (hh:mm:ss). EXAMPLE 1:00 PM = 13:00:00. e) %10c represents calendar date as YYYY-MM-DD. EXAMPLE March 8, 2017 = 2017-03-08.
%m.nf	%m.nf describes an optionally signed floating-point number, of which the maximum length of decimal is n, and the maximum length of integer is (*m*-*n*-1). Left justified; no leading or trailing blank spaces. Decimal symbols shall be included and displayed with a dot (“.”). Decimals shall be used for non-integers. Negative numbers shall be indicated with a minus sign (–) immediately preceding the number. Percentages shall be represented as decimals, where 100 % = 1.00 and 10 % = 0.10.
%nd	%nd describes an optionally signed decimal integer, of which the maximum length is *n*. Left justified; no leading or trailing blank spaces. Negative numbers shall be indicated with a minus sign (–) immediately preceding the number.

Datatypes included in this document are listed in and shall conform to Table 3. The specific requirements for these elements are not listed in the subsequent tables.

Table 3 — The datatypes and corresponding representations

Datatype	Representation	ISO standard adoption
Date	%10c	Represent date in YYYY-MM-DD format (in accordance with ISO 8601-1). EXAMPLE %10c describes "2010-05-01", but not "2010-5-01".
Time	%8c	Represent time in 24-hour time in hh:mm:ss format (in accordance with ISO 8601-1). EXAMPLE 1:00 PM = 13:00:00.
String	%ns	Represent a sequence of characters, of which the maximum length is *n* (in accordance with ISO/IEC 14957:2010). EXAMPLE %6s describes "123", "123abc", but not "123abcd".
Decimal	%m.nf	Represent an optionally signed floating-point number, of which the maximum length of decimal is n, and the maximum length of integer is (*m*-*n*-1) (in accordance with ISO/IEC 14957:2010). EXAMPLE %11.6f describes "4.527125", "8692.52", but not "4.5271258" or "86926.52".
Integer	%nd	Represent an optionally signed decimal integer, of which the maximum length is *n* (in accordance with ISO/IEC 14957:2010). EXAMPLE %4d describes "32", "3482", but not "34875".

© ISO 2019 – All rights reserved

Documents
Document Sharing Hub
Full document details: BS ISO 21378:2019

Table 3 *(continued)*

Datatype	Representation	ISO standard adoption
Boolean	%1c	Represent a two-valued logic data, of which the length is exactly 1 (in accordance with ISO/IEC 14957:2010). EXAMPLE %1c describes "1" or "0", which means True or False.

4.4 Base module

4.4.1 General

The Base (BAS) module contains basic information that is used across multiple modules. Its content includes data related to business units, payment terms, projects, bank accounts and currency. Other modules (e.g. GL, AR, SAL, AP) should be used in conjunction with this module.

4.4.2 BAS_Business_Segment

The BAS_Business_Segment (see Table 4) and the BAS_Business_Segment_Hierarchy (see Table 6) have been designed to tabularize the portions of an organizational chart that is reflected in the business transactions as structural units, e.g. business unit, department, cost centre, project.

Instructions on how to implement the business segment structures (described in 4.4.2 and 4.4.3) are detailed in Annex A.

The fields within the BAS_Business_Segment (see Table 4) are used to capture the individual organizational unit represented by each box on an organizational diagram. This table is level 1.

Table 4 — BAS_Business_Segment

No.	Name	Data-type	Repre-sentation	Description	Level
1	Business_Segment_Code	String	%25s	Code for each business segment.	1
2	Business_Segment_Name	String	%25s	Name of the business segment.	1
3	Segment_Reference_Level	String	%2c	Relative level of the segment, with 1 being the consolidated level and the numbers increasing through the lower levels of the organizational chart.	1
4	Organization_Type_Name	String	%60s	Indicates the name of the organization type (e.g. department, cost centre).	1

The primary key for BAS_Business_Segment is listed in Table 5.

Table 5 — Identifiers in BAS_Business_Segment

No.	Name	Identifier	Referenced field	Referenced table
1	Business_Segment_Code	PK	not applicable	not applicable

4.4.3 BAS_Business_Segment_Hierarchy

The fields in the BAS_Business_Segment_Hierarchy (see Table 6) are used to capture the relationships between the individual organizational units. The table assumes a one-to-one relationship and captures the data necessary to consolidate transactions occurring for child level organizational units into higher level organizational structures (e.g. business unit to division). This table is level 1.

Instructions on how to implement the business segment structures (described in 4.4.2 and 4.4.3) are detailed in Annex A.

© ISO 2019 – All rights reserved
Documents
Document Sharing Hub
Full document details: BS ISO 21378:2019

Table 6 — BAS_Business_Segment_Hierarchy

No.	Name	Data-type	Repre-sentation	Description	Level
1	Parent_Code	String	%25s	Code for the parent business segment. Shall match the Business_Segment_Code in the BAS_Business_Segment table (see Table 4).	1
2	Child_Code	String	%25s	Code for the child business segment. Shall match the Business_Segment_Code in the BAS_Business_Segment table (see Table 4).	1

The primary keys and reference identifiers, with the related referenced fields and tables, for BAS_Business_Segment_Hierarchy are listed in Table 7.

Table 7 — Identifiers in BAS_Business_Segment_Hierarchy

No.	Name	Identifier	Referenced field	Referenced table
1	Parent_Code	PK/REF	Business_Segment_Code	BAS_Business_Segment
2	Child_Code	PK/REF	Business_Segment_Code	BAS_Business_Segment

4.4.4 BAS_Employee

The personnel information of the employee in an independent accounting unit is contained in Table 8. This table is level 2.

Table 8 — BAS_Employee

No.	Name	Data-type	Repre-sentation	Description	Level
1	Employee_ID	String	%60s	Unique identifier for an employee. Typically auto-generated by the system.	1
2	Employee_Code	String	%60s	Code for the employee. Each employee has only one code. If someone has part-time jobs in multiple departments, there will be more than one record with different Employee_ID in this table. The part-time status will be reflected in Employee_Type_Code.	1
3	Employee_Name	String	%100s	Name of the employee.	1
4	Inactive_flag	Boolean	%1c	Indicates whether one employee is active or inactive. An employee can become inactive due to various reasons (e.g. taking a sabbatical).	2
5	Employee_Type_Code	String	%60s	Code for the employee type. EXAMPLE 004 is an on-the-job employee, 005 is a retired employee, 006 is a deceased employee, 007 is a part-time employee.	1
6	Employee_Type_Name	String	%60s	Name of the employee type. EXAMPLE Employed, retired, probation, part-time.	1

© ISO 2019 – All rights reserved

Documents
Document Sharing Hub
Full document details: BS ISO 21378:2019

Table 8 *(continued)*

No.	Name	Data-type	Repre-sentation	Description	Level
7	Department_Code	String	%25s	Code for department rosters. EXAMPLE The department name is IT department, the code is 0018. Shall match the Business_Segment_Code in the BAS_Business_Segment table (see Table 4).	1
8	Employee_Job_Title	String	%60s	Job title of a person in an accounting unit. EXAMPLE Accounting manager.	2
9	Employee_Academic_Degree	String	%60s	Highest academic degree acquired. EXAMPLE Doctor, Master.	2
10	Employment_Date	Date	%10c	Employment date of the employee.	2
11	Termination_Date	Date	%10c	Termination date of the employee from when the labour contract was no longer valid, or from when the employee no longer works in this department.	2
12	User_ID	String	%25s	System user ID associated with the employee. Shall match the User_ID in the BAS_User table (see Table 10).	2

The primary key and reference identifiers, with the related referenced fields and tables, for BAS_Employee are listed in Table 9.

Table 9 — Identifiers in BAS_Employee

No.	Name	Identifier	Referenced field	Referenced table
1	Employee_ID	PK	not applicable	not applicable
6	Department_Code	REF	Business_Segment_Code	BAS_Business_Segment
11	User_ID	REF	User_ID	BAS_User

4.4.5 BAS_User

The user information of the accounting and/or ERP system is contained in Table 10. This table is level 1.

Table 10 — BAS_User

No.	Name	Data-type	Repre-sentation	Description	Level
1	User_ID	String	%25s	Unique identifier for individuals entering transactions into the accounting and/or ERP system. Typically auto-generated by the system. This field is used to join information in this table to other tables based on fields such as Created_User_ID, Last_Modified_User_ID, Approved_User_ID and Posted_User_ID.	1

© ISO 2019 – All rights reserved
Documents
Document Sharing Hub
Full document details: BS ISO 21378:2019

Table 10 *(continued)*

No.	Name	Data-type	Repre-sentation	Description	Level
2	User_Active_Status	Boolean	%1c	Indicates whether the status of the user is active or inactive. A user can become inactive due to re-tirement, dismissal or termination, etc. EXAMPLE 1 is active, 0 is inactive.	2
3	User_Status_Modified_Date	Date	%10c	Modified date of the user's activation or termination status.	2
4	User_Name	String	%100s	Name of the user.	1
5	User_Job_Title	String	%100s	Job title of the person in the system. EXAMPLE System manager.	2
6	Department_Code	String	%25s	Code for department rosters. EXAMPLE The department name is IT department, the code is 0018. Shall match the Business_Segment_Code in the BAS_Business_Segment table (see Table 4).	2
7	User_Role_Responsibility	String	%100s	Free-form description of the individual's functional role or primary responsibility. EXAMPLE Responsibility related to managing the information of AP in the system.	2

The primary key and reference identifiers, with the related referenced fields and tables, for BAS_User are listed in Table 11.

Table 11 — Identifiers in BAS_User

No.	Name	Identifier	Referenced field	Referenced table
1	User_ID	PK	not applicable	not applicable
6	Department_Code	REF	Business_Segment_Code	BAS_Business_Segment

4.4.6 BAS_Customer_Type

Detailed descriptions of the customer type are contained in Table 12. This table is level 2.

Table 12 — BAS_Customer_Type

No.	Name	Data-type	Repre-sentation	Description	Level
1	Customer_Type_ID	String	%60s	Unique identifier for the customer type. Typically auto-generated by the system.	1
2	Customer_Type_Code	String	%100s	Code for the customer type. EXAMPLE 004 is a platinum customer, 005 is a gold customer, 006 is a silver customer. Customer_Type_Code and Customer_Type_Name are not necessarily related.	1

© ISO 2019 – All rights reserved

Documents
Document Sharing Hub
Full document details: BS ISO 21378:2019

Table 12 *(continued)*

No.	Name	Data-type	Repre-sentation	Description	Level
3	Customer_Type_Name	String	%80s	Name of the type categorized by the customer attributes. EXAMPLE Platinum customer, gold customer, silver customer.	1
4	Parent_Customer_Type_ID	String	%60s	Unique identifier for the parent customer type. Typically auto-generated by the system. Shall match the Customer_Type_ID in the BAS_Customer_Type table (see Table 12).	2

The primary key and reference identifiers, with the related referenced fields and tables, for BAS_Customer_Type are listed in Table 13.

Table 13 — Identifiers in BAS_Customer_Type

No.	Name	Identifier	Referenced field	Referenced table
1	Customer_Type_ID	PK	not applicable	not applicable
4	Parent_Customer_Type_ID	REF	Customer_Type_ID	BAS_Customer_Type

4.4.7 BAS_Customer

The essential and generic information of the customers is contained in Table 14. This table is level 1.

Table 14 — BAS_Customer

No.	Name	Data-type	Repre-sentation	Description	Level
1	Customer_Account_ID	String	%100s	Unique identifier for the customer. Typically auto-generated by the system.	1
2	Customer_Account_Number	String	%100s	Number of the customer. This number is generated either by manual input or by the system.	1
3	Customer_Account_Name	String	%200s	Name of the customer.	1
4	Customer_Abbreviation	String	%100s	Abbreviation of the customer's name.	2
5	Parent_Customer_ID	String	%100s	Unique identifier for the parent customer. Shall match the Customer_Account_ID in the BAS_Customer table (see Table 14).	2
6	Corresponding_Supplier_ID	String	%100s	Unique identifier for the corresponding supplier in cases where the customer is also a supplier. Shall match the Supplier_Account_ID in the BAS_Supplier table (see Table 18). Otherwise, set NULL.	2

© ISO 2019 – All rights reserved
Documents
Document Sharing Hub
Full document details: BS ISO 21378:2019

Table 14 *(continued)*

No.	Name	Data-type	Repre-sentation	Description	Level
7	Customer_Type_ID	String	%60s	Unique identifier for the customer type. Typically auto-generated by the system. Shall match the Customer_Type_ID in the BAS_Customer_Type table (see Table 12).	2
8	Customer_TIN	String	%100s	Customer's tax identification number. This number is usually generated by a tax regulator.	1
9	Customer_Street_Address1	String	%100s	Line 1 of the customer's physical street address.	1
10	Customer_Street_Address2	String	%100s	Line 2 of the customer's physical street address.	1
11	Customer_City	String	%100s	Physical city where the customer is located.	1
12	Customer_State_Province	String	%6s	Physical state or province where the customer is located (in accordance with ISO 3166-2).	2
13	Customer_Physical_Postal_Code	String	%20s	Postal code of the city where the customer is physically located.	1
14	Customer_Country	String	%3s	Country code where the customer is physically located (in accordance with ISO 3166-1).	1
15	Customer_Billing_Address1	String	%100s	Line 1 of the customer's billing address.	1
16	Customer_Billing_Address2	String	%100s	Line 2 of the customer's billing address.	1
17	Customer_Billing_City	String	%100s	Billing city of the customer.	1
18	CUS_Billing_State_Province	String	%6s	Billing state or province of the customer (in accordance with ISO 3166-2).	2
19	Customer_Billing_Postal_Code	String	%20s	Billing postal code of the customer's city.	1
20	Customer_Billing_Country	String	%3s	Billing country code of the customer (in accordance with ISO 3166-1).	1
21	Primary_Contact_Name	String	%100s	Name of the primary contact for the customer.	2
22	Primary_Contact_Phone	String	%20s	Phone number of the primary contact for the customer.	2
23	Primary_Contact_Email	String	%100s	Email address of the primary contact for the customer.	2
24	Inactive_Date	Date	%10c	Date when the customer was declared inactive. A customer can become inactive due to exceeding their credit limit, legal restrictions, contract termination or bankruptcy.	2
25	Transaction_Credit_Limit	Decimal	%22.4f	Per invoice credit limit established for the customer.	2
26	Total_Credit_Limit	Decimal	%22.4f	Credit limit for the customer's total outstanding balance.	2

© ISO 2019 – All rights reserved

Documents
Document Sharing Hub
Full document details: BS ISO 21378:2019

Table 14 *(continued)*

No.	Name	Data-type	Repre-sentation	Description	Level
27	Terms_Discount_Percentage	Decimal	%5.4f	Discount percentage the customer can take if an invoice is paid before a certain number of days. In the flat file, terms are represented as integers to a decimal place. EXAMPLE 10 % is 0.10.	2
28	Terms_Discount_Days	Integer	%6d	Number of days from the invoice date that the customer has to take advantage of discounted terms. Terms are represented as integers with no decimal places. EXAMPLE 10 days are 10.	2
29	Terms_Due_Days	Integer	%6d	Default number of days allowed to meet the obligation before an invoice becomes overdue.	2
30	Created_User_ID	String	%25s	Unique identifier for the person who created the record. Typically auto-generated by the system. Shall match the User_ID in the BAS_User table (see Table 10).	2
31	Created_Date	Date	%10c	Date when the transaction was created in the system. This should be a system-generated date (rather than a user-created date), when possible. This sometimes refers to the creation date.	2
32	Created_Time	Time	%8c	Time when the transaction record was created in the system.	2
33	Approved_User_ID	String	%25s	Unique identifier for the person who approved the customer additions or changes. Typically auto-generated by the system. Shall match the User_ID in the BAS_User table (see Table 10).	2
34	Approved_Date	Date	%10c	Date when the customer additions or changes were approved.	2
35	Approved_Time	Time	%8c	Time when the entry was approved.	2
36	Last_Modified_User_ID	String	%25s	Unique identifier for the last person who modified this entry. Typically auto-generated by the system. Shall match the User_ID in the BAS_User table (see Table 10).	2
37	Last_Modified_Date	Date	%10c	Date when the customer record was last modified.	2
38	Last_Modified_Time	Time	%8c	Time when the entry was last modified.	2

© ISO 2019 – All rights reserved
Documents
Document Sharing Hub
Full document details: BS ISO 21378:2019

The primary key and reference identifiers, with the related referenced fields and tables, for BAS_Customer are listed in Table 15.

Table 15 — Identifiers in BAS_Customer

No.	Name	Identifier	Referenced field	Referenced table
1	Customer_Account_ID	PK	not applicable	not applicable
5	Parent_Customer_ID	REF	Customer_Account_ID	BAS_Customer
6	Corresponding_Supplier_ID	REF	Supplier_Account_ID	BAS_Supplier
7	Customer_Type_ID	REF	Customer_Type_ID	BAS_Customer_Type
30	Created_User_ID	REF	User_ID	BAS_User
33	Approved_User_ID	REF	User_ID	BAS_User
36	Last_Modified_User_ID	REF	User_ID	BAS_User

4.4.8 BAS_Supplier_Type

Detailed descriptions of the supplier type are contained in Table 16. This table is level 2.

Table 16 — BAS_Supplier_Type

No.	Name	Data-type	Repre-sentation	Description	Level
1	Supplier_Type_ID	String	%60s	Unique identifier for the supplier type. Typically auto-generated by the system.	1
2	Supplier_Type_Code	String	%100s	Code for the supplier type. EXAMPLE 004 is preferred suppliers, 005 is key suppliers, 006 is common suppliers.	1
3	Supplier_Type_Name	String	%80s	Name of the type categorized by the supplier attributes. EXAMPLE Preferred supplier, key supplier, common supplier.	1
4	Parent_Supplier_Type_ID	String	%60s	Unique identifier for the parent supplier type. EXAMPLE Raw material supplier is a parent type of iron supplier. Typically auto-generated by the system. Shall match the Supplier_Type_ID in the BAS_Supplier_Type table (see Table 16).	2

The primary key and reference identifiers, with the related referenced field and table, for BAS_Supplier_Type are listed in Table 17.

Table 17 — Identifiers in BAS_Supplier_Type

No.	Name	Identifier	Referenced field	Referenced table
1	Supplier_Type_ID	PK	not applicable	not applicable
4	Parent_Supplier_Type_ID	REF	Supplier_Type_ID	BAS_Supplier_Type

© ISO 2019 – All rights reserved

Documents
Document Sharing Hub
Full document details: BS ISO 21378:2019

4.4.9 BAS_Supplier

The essential and generic information of the suppliers is contained in Table 18. This table is level 1.

Table 18 — BAS_Supplier

No.	Name	Data-type	Repre-sentation	Description	Level
1	Supplier_Account_ID	String	%100s	Unique identifier for the supplier to whom payment is due or from whom unused credits have been applied. Typically auto-generated by the system.	1
2	Supplier_Account_Number	String	%100s	Number of the supplier to whom payment is due or from whom unused credits have been applied. This number is usually generated by manual input or is generated by the system.	1
3	Supplier_Account_Name	String	%200s	Name of the supplier.	1
4	Supplier_Abbreviation	String	%100s	Abbreviation of the supplier's name.	2
5	Parent_Supplier_ID	String	%100s	Unique identifier for the parent supplier. Typically auto-generated by the system. Shall match the Supplier_Account_ID in the BAS_Supplier table (see Table 18).	2
6	Corresponding_Customer_ID	String	%100s	Unique identifier for the corresponding customer in cases where the supplier is also a customer. Typically auto-generated by the system. Shall match the Customer_Account_ID in the BAS_Customer table (see Table 14). Otherwise, set NULL.	2
7	Supplier_Type_ID	String	%60s	Unique identifier for the supplier type. Typically auto-generated by the system. Shall match the Supplier_Type_ID in the BAS_Supplier_Type table (see Table 16).	2
8	Supplier_TIN	String	%100s	Supplier's tax identification number. This number is usually generated by the tax regulator.	1
9	Supplier_Street_Address1	String	%100s	Line 1 of the supplier's physical street address.	1
10	Supplier_Street_Address2	String	%100s	Line 2 of the supplier's physical street address.	1
11	Supplier_City	String	%100s	Physical city where the supplier is located.	1
12	Supplier_State_Province	String	%6s	Physical state or province where the supplier is located (in accordance with ISO 3166-2).	2
13	Supplier_Physical_Postal_Code	String	%20s	Postal code of the city where the supplier is physically located.	1
14	Supplier_Country	String	%3s	Country code where the supplier is physically located (in accordance with ISO 3166-1).	1
15	Supplier_Billing_Address1	String	%100s	Line 1 of the supplier's billing address.	1

© ISO 2019 – All rights reserved
Documents
Document Sharing Hub
Full document details: BS ISO 21378:2019

Table 18 *(continued)*

No.	Name	Data-type	Repre-sentation	Description	Level
16	Supplier_Billing_Address2	String	%100s	Line 2 of the supplier's billing address.	1
17	Supplier_Billing_City	String	%100s	Billing city of the supplier.	1
18	Supplier_Billing_State_PRV	String	%6s	Billing state or province of the supplier (in accordance with ISO 3166-2).	1
19	Supplier_Billing_Postal_Code	String	%20s	Billing postal code of the supplier's city.	1
20	Supplier_Billing_Country	String	%3s	Billing country code of the supplier (in accordance with ISO 3166-1).	1
21	Primary_Contact_Name	String	%100s	Name of the primary contact for the supplier.	2
22	Primary_Contact_Phone	String	%20s	Phone number of the primary contact for the supplier.	2
23	Primary_Contact_Email	String	%100s	Email address of the primary contact for the supplier.	2
24	Supplier_Group	String	%100s	Supplier group assignments when the organization segments the suppliers.	2
25	Inactive_Date	Date	%10c	Date when the supplier was declared inactive. A supplier can become inactive due to exceeding their credit limit, legal restrictions, contract termination or bankruptcy.	2
26	Transaction_Credit_Limit	Decimal	%22.4f	Per invoice credit limit established for the supplier.	2
27	Total_Credit_Limit	Decimal	%22.4f	Credit limit for the total outstanding balance approved for the supplier.	2
28	Terms_Discount_Percentage	Decimal	%5.4f	Discount percentage the supplier can provide if an invoice is paid before a certain number of days. In the flat file, terms are represented as integers to a decimal place. EXAMPLE 10 % is 0.10.	2
29	Terms_Discount_Days	Integer	%6d	Number of days from the invoice date that the supplier allows the customer to take advantage of discounted terms. Terms are represented as integers with no decimal places. EXAMPLE 10 days is 10.	2
30	Terms_Due_Days	Integer	%6d	Number of days allowed to meet the obligation before an invoice becomes overdue.	2
31	Created_User_ID	String	%25s	Unique identifier for the person who created the record. Typically auto-generated by the system. Shall match the User_ID in the BAS_User table (see Table 10).	2
32	Created_Date	Date	%10c	Date when the record was created in the system.	2
33	Created_Time	Time	%8c	Time when the record was created in the system.	2

© ISO 2019 – All rights reserved

Documents
Document Sharing Hub
Full document details: BS ISO 21378:2019

Table 18 *(continued)*

No.	Name	Data-type	Repre-sentation	Description	Level
34	Approved_User_ID	String	%25s	Unique identifier for the person who approved the supplier additions or changes. Typically auto-generated by the system. Shall match the User_ID in the BAS_User table (see Table 10).	2
35	Approved_Date	Date	%10c	Date when the supplier additions or changes were approved.	2
36	Approved_Time	Time	%8c	Time when the supplier additions or changes were approved.	2
37	Last_Modified_User_ID	String	%25s	Unique identifier for the last person who modified the record. Typically auto-generated by the system. Shall match the User_ID in the BAS_User table (see Table 10).	2
38	Last_Modified_Date	Date	%10c	Date when the record was last modified.	2
39	Last_Modified_Time	Time	%8c	Time when the record was last modified.	2

The primary key and reference identifiers, with the related referenced fields and tables, for BAS_Supplier are listed in Table 19.

Table 19 — Identifiers in BAS_Supplier

No.	Name	Identifier	Referenced field	Referenced table
1	Supplier_Account_ID	PK	not applicable	not applicable
5	Parent_Supplier_ID	REF	Supplier_Account_ID	BAS_Supplier
6	Corresponding_Customer_ID	REF	Customer_Account_ID	BAS_Customer
7	Supplier_Type_ID	REF	Supplier_Type_ID	BAS_Supplier_Type
31	Created_User_ID	REF	User_ID	BAS_User
34	Approved_User_ID	REF	User_ID	BAS_User
37	Last_Modified_User_ID	REF	User_ID	BAS_User

4.4.10 BAS_Chart_Of_Accounts

The information about GL accounts, including name, description, type and hierarchy, is contained in Table 20. When it is cross-referred by other table(s), consistency shall apply. For example, in this table, the value of GL_Account_Number is 101, the value of GL_Account_Name is cash, and the value of Balance_Debit_Or_Credit is D. If the value of GL_Account_Number in the GL_Trial_Balance table is 101, then the Amount corresponding with cash account (101) must be debit. This table is level 1.

Table 20 — BAS_Chart_Of_Accounts

No.	Name	Data-type	Repre-sentation	Description	Level
1	GL_Account_Number	String	%100s	Number of the GL account.	1
2	GL_Account_Name	String	%100s	Name of the GL account.	1
3	GL_Account_Description	String	%1000s	Label or description associated with the GL_Account_Number.	2

© ISO 2019 – All rights reserved
Documents
Document Sharing Hub
Full document details: BS ISO 21378:2019

Table 20 *(continued)*

No.	Name	Data-type	Repre-sentation	Description	Level
4	FS_Caption	String	%100s	Financial statement caption that represents a related group of accounts. EXAMPLE Cash and cash equivalents, AP, cost of sales. The caption can be at the trial balance level.	1
5	Account_Type	String	%25s	Type of account. EXAMPLE Assets, liabilities, equity, revenues, expenses.	1
6	Account_Subtype	String	%25s	Subtype of the account. EXAMPLE Current assets are the subtype of assets.	1
7	Account_Hierarchy	Integer	%2d	Corresponding level for account number in the account hierarchy. EXAMPLE 1 is assets, 2 is the account subtype current assets.	2
8	Parent_GL_Account_Number	String	%100s	Number of the parent account in an account hierarchy. This is provided to allow more than the predefined levels of the hierarchy in the BAS_Chart_Of_Accounts table. When Parent_GL_Account_Number is the highest level, its value can be set to the default value (e.g. set to NULL). Shall match the GL_Account_Number in the BAS_Chart_Of_Accounts table (see Table 20).	1
9	Balance_Debit_Or_Credit	String	%1c	Indicates whether the natural balance of the account is a debit or credit balance by indicating D or C, where assets and expenses have a natural balance of debit, and liabilities, equity and revenues have a natural balance of credit.	2
10	Active_Flag	Boolean	%1c	Indicates whether the GL account is active or inactive. EXAMPLE 1 is active, 0 is inactive.	2
11	Business_Segment_X	String	%25s	Reserved field that shall be used for business segments/structures. The "X" signifies an organizational level. Each number used to replace the "X" is associated with a unique reference level. EXAMPLE Division, department, business unit, purchasing organization, project, legal entity.	1

© ISO 2019 – All rights reserved

Documents
Document Sharing Hub
Full document details: BS ISO 21378:2019

The primary key and reference identifiers, with the related referenced fields and tables, for BAS_Chart_Of_Accounts are listed in Table 21.

Table 21 — Identifiers in BAS_Chart_Of_Accounts

No.	Name	Identifier	Referenced field	Referenced table
1	GL_Account_Number	PK	not applicable	not applicable
8	Parent_GL_Account_Number	REF	GL_Account_Number	BAS_Chart_Of_Accounts

4.4.11 BAS_Accounting_Period

The information related to the accounting period, including corresponding fiscal year, beginning date and ending date, is contained in Table 22. The table captures the time range within a specific reporting period and year, in which business transactions and entries are accumulated into financial statements and other reports. This table is level 1.

Table 22 — BAS_Accounting_Period

No.	Name	Data-type	Repre-sentation	Description	Level
1	Fiscal_Year	String	%4c	Fiscal year in which the calendar date occurs. The year shall be shown in four digits as YYYY, which is part of the extended format and the YYYY-MM-DD from ISO 8601-1.	1
2	Accounting_Period	String	%15s	Accounting period in which the calendar date occurs. EXAMPLE W1–W53 for weekly periods, M1–M12 for monthly periods, Q1–Q4 for quarterly periods, from any beginning date to any ending date.	1
3	Accounting_Period_BEG_Date	Date	%10c	Calendar beginning date of the current accounting period.	1
4	Accounting_Period_Ending_Date	Date	%10c	Calendar ending date of the current accounting period.	1

The primary keys for BAS_Accounting_Period are listed in Table 23.

Table 23 — Identifiers in BAS_Accounting_Period

No.	Name	Identifier	Referenced field	Referenced table
1	Fiscal_Year	PK	not applicable	not applicable
2	Accounting_Period	PK	not applicable	not applicable

4.4.12 BAS_Journal_Entry_Type

The information relevant to the GL journal entry type (e.g. cash receipts, cash disbursements) is contained in Table 24. This table is level 2.

© ISO 2019 – All rights reserved
Documents
Document Sharing Hub
Full document details: BS ISO 21378:2019

Table 24 — BAS_Journal_Entry_Type

No.	Name	Data-type	Repre-sentation	Description	Level
1	JE_Type_Code	String	%60s	Code for the journal entry type. EXAMPLE 004 is a cash receipt entry, 005 is a cash disbursement entry, 006 is a non-cash entry.	1
2	JE_Type_Name	String	%60s	Name of the journal entry type. This is usually categorized by business to satisfy an internal control need and/or to facilitate sorting and querying. EXAMPLE Journal entries can be classified based on whether the transaction involves cash. In this case, there can be a cash receipt entry, cash disbursement entry and non-cash entry of adjusting that is the recording of interest revenue earned and wages payable, estimation that is the recording depreciation, and bad-debt expenses, and/or correction that makes entries to counteract the effects of errors found in the GL.	1
3	JE_Type_Abbreviation	String	%30s	Abbreviation of the journal entry type.	2
4	Active_Flag	Boolean	%1c	Indicates whether the JE type is active or inactive. EXAMPLE 1 is active, 0 is inactive.	2

The primary key for BAS_Journal_Entry_Type is listed in Table 25.

Table 25 — Identifiers in BAS_Journal_Entry_Type

No.	Name	Identifier	Referenced field	Referenced table
1	JE_Type_Code	PK	not applicable	not applicable

4.4.13 BAS_Bill_Type

The information of the bill type (e.g. bank draft, commercial draft, promissory note, check) is contained in Table 26. Bills are frequently used in the business cycle of sales and purchase, as evidence of debt, payment and/or settlement instrument. This table is level 2.

Table 26 — BAS_Bill_Type

No.	Name	Data-type	Repre-sentation	Description	Level
1	Bill_Type_Code	String	%60s	Code for the bill type. EXAMPLE 004 is bank draft, 005 is promissory note, 006 is check.	1
2	Bill_Type_Name	String	%60s	Name of the bill type. EXAMPLE Bank draft, commercial draft, promissory note and check.	1
3	Active_Flag	Boolean	%1c	Indicates whether the bill type is active or inactive. EXAMPLE 1 is active, 0 is inactive.	2

© ISO 2019 – All rights reserved

Documents
Document Sharing Hub
Full document details: BS ISO 21378:2019

The primary key for BAS_Bill_Type is listed in Table 27.

Table 27 — Identifiers in BAS_Bill_Type

No.	Name	Identifier	Referenced field	Referenced table
1	Bill_Type_Code	PK	not applicable	not applicable

4.4.14 BAS_Settlement_Method

The information on methods used to settle transactions is contained in Table 28. Businesses can adopt various methods to settle transactions and transfer money, especially in sales and purchase activities. Typical settlement methods include cash settlements, issuing bills, using credit cards, bank remittances and bank collections. This table is level 1.

Table 28 — BAS_Settlement_Method

No.	Name	Data-type	Repre-sentation	Description	Level
1	Settlement_Method_Code	String	%60s	Code for the settlement method. Various methods can be used to settle transactions and transfer money. EXAMPLE 001 for cash, 002 for bills, 003 for credit card, 004 for remittance, 005 for bank collection.	1
2	Settlement_Method_Name	String	%60s	Name of the settlement method. EXAMPLE Cash settlement, issuing bills, credit card, bank remittance, bank collection.	1
3	Active_Flag	Boolean	%1c	Indicates whether the settlement method is active or inactive. EXAMPLE 1 is active, 0 is inactive.	2

The primary key for BAS_Settlement_Method is listed in Table 29.

Table 29 — Identifiers in BAS_Settlement_Method

No.	Name	Identifier	Referenced field	Referenced table
1	Settlement_Method_Code	PK	not applicable	not applicable

4.4.15 BAS_Currency

The information of the currency is contained in Table 30. This table is level 1.

Table 30 — BAS_Currency

No.	Name	Data-type	Repre-sentation	Description	Level
1	Currency_Code	String	%3c	Code for the currency (in accordance with ISO 4217).	1
2	Currency_Name	String	%30s	Name of the currency in the accounting and/or ERP system.	1

© ISO 2019 – All rights reserved
Documents
Document Sharing Hub
Full document details: BS ISO 21378:2019

Table 30 *(continued)*

No.	Name	Data-type	Repre-sentation	Description	Level
3	Minor_Unit	Integer	%1d	Unit of recorded value that is a division of the respective unit of currency. Minor unit shows the decimal relationship between such a unit and the currency itself (in accordance with ISO 4217). Number 0 means that there is no minor unit for that currency. Numbers 1, 2, 3, etc. signify a ratio of 10:1, 100:1, 1 000:1, etc., respectively. EXAMPLE The US cent is a one hundredth part of the US dollar. The GB penny is a one hundredth part of the pound sterling. The minor unit number for both is 2.	2
4	Active_Flag	Boolean	%1c	Indicates whether Currency_Code is active or inactive. EXAMPLE 1 is active, 0 is inactive.	2

The primary key for BAS_Currency is listed in Table 31.

Table 31 — Identifiers in BAS_Currency

No.	Name	Identifier	Referenced field	Referenced table
1	Currency_Code	PK	not applicable	not applicable

4.4.16 BAS_Measurement_Unit

The information of the measurement unit (UOM) used in the modules of GL, SAL, PUR, INV and PPE is contained in Table 32. This table is level 1.

Table 32 — BAS_Measurement_Unit

No.	Name	Data-type	Repre-sentation	Description	Level
1	UOM_Code	String	%80s	Code for the measurement unit.	1
2	UOM_Name	String	%80s	Name of the measurement unit for measuring the quantity of the material, etc.	1
3	UOM_Abbreviation	String	%40s	Abbreviation of the measurement unit's name. EXAMPLE Kilogram is kg, square metre is sq.m.	1
4	Active_Flag	Boolean	%1c	Indicates whether the UOM_Code is active or inactive. EXAMPLE 1 is active, 0 is inactive.	2

The primary key for BAS_Measurement_Unit is listed in Table 33.

Table 33 — Identifiers in BAS_Measurement_Unit

No.	Name	Identifier	Referenced field	Referenced table
1	UOM_Code	PK	not applicable	not applicable

© ISO 2019 – All rights reserved

Documents
Document Sharing Hub
Full document details: BS ISO 21378:2019

4.4.17 BAS_Payment_Term

The details of the payment term, which is applied and referenced in the PUR and SAL modules, are contained in Table 34. The payment term refers to the condition of a sale/purchase agreement and is related to how the customer will pay (type of credit instrument), and especially how much time is allowed for payment (credit period) and discount (cash discount and discount period). This table is level 1.

Table 34 — BAS_Payment_Term

No.	Name	Data-type	Repre-sentation	Description	Level
1	Payment_Term_Code	String	%80s	Code for the payment term. EXAMPLE Terms of 2/10, net 60 are quoted. This means that customers have 60 days from the invoice date to pay the full amount. However, if payment is made within 10 days, a 2 % cash discount can be taken.	1
2	Payment_Term_Name	String	%200s	Full name of the payment term.	1
3	Payment_Term_Line_Number	String	%10s	Number of the lines according to the Payment_Term_Code value. This number is generated either by manual input or by the system.	1
4	Payment_Term_Line_Description	String	%1000s	Detailed description of the payment term's line. EXAMPLE Payment due date, discount days, discount percentage.	1
5	Active_Flag	Boolean	%1c	Indicates whether the payment term is active or inactive. EXAMPLE 1 is active, 0 is inactive.	2

The primary key for BAS_Payment_Term is listed in Table 35.

Table 35 — Identifiers in BAS_Payment_Term

No.	Name	Identifier	Referenced field	Referenced table
1	Payment_Term_Code	PK	not applicable	not applicable

4.4.18 BAS_Project

The detailed information related to the project (e.g. construction project, government, business-funded research project) is contained in Table 36. Projects are commonly administered separately and could be subject to being audited in accordance with regulatory and/or managerial requirements. The audit of a project is a thorough examination of the management, execution, methodology, procedures, records, budgets, expenditures and the degree of completion. It is referenced in several modules including GL, AR, AP and INV. This table is level 2.

Table 36 — BAS_Project

No.	Name	Data-type	Repre-sentation	Description	Level
1	Project_ID	String	%60s	Unique identifier for the project. Typically auto-generated by the system.	1
2	Project_Code	String	%80s	Code of the project.	1

© ISO 2019 – All rights reserved
Documents
Document Sharing Hub
Full document details: BS ISO 21378:2019

Table 36 *(continued)*

No.	Name	Data-type	Repre-sentation	Description	Level
3	Project_Name	String	%80s	Name of the project related to operation and administration.	1
4	Project_Beginning_Date	Date	%10c	Beginning date of the project.	2
5	Project_Ending_Date	Date	%10c	Ending date of the project.	2
6	Active_Flag	Boolean	%1c	Indicates whether the project is active or inactive. EXAMPLE 1 is active, 0 is inactive.	2
7	Business_Segment_X	String	%25s	Reserved field that shall be used for business segments/structures. The "X" signifies an organizational level. Each number used to replace the "X" is associated with a unique reference level. EXAMPLE Division, department, business unit, purchasing organization, project, legal entity.	1

The primary key for BAS_Project is listed in Table 37.

Table 37 — Identifiers in BAS_Project

No.	Name	Identifier	Referenced field	Referenced table
1	Project_ID	PK	not applicable	not applicable

4.4.19 BAS_Bank_Account

The details of a bank account are contained in Table 38. This table is level 2.

Table 38 — BAS_Bank_Account

No.	Name	Data-type	Repre-sentation	Description	Level
1	Bank_Account_Number	String	%60s	Number of the account opened in an institution (e.g. bank, financial institution, settlement centre). ISO 13616-2 is recommended if applicable.	1
2	Bank_Account_Name	String	%128s	Name of the account opened in an institution (e.g. bank, financial institution, settlement centre).	1
3	Bank_Code	String	%80s	Code for the financial institution (in accordance with ISO 9362 or ISO 17442). ISO 17442 is preferred. One reason is that the bank branch identifier will not change due to location movement.	1
4	Bank_Name	String	%200s	Full name of the institution (e.g. bank, financial institution, settlement centre).	1
5	Branch_Code	String	%80s	Code for the institution's branch.	1
6	Branch_Name	String	%200s	Full name of the institution's branch.	1
7	Branch_Country	String	%3s	Country code where the branch is physically located (in accordance with ISO 3166-1).	2

© ISO 2019 – All rights reserved

Documents
Document Sharing Hub
Full document details: BS ISO 21378:2019

Table 38 *(continued)*

No.	Name	Data-type	Repre-sentation	Description	Level
8	Branch_Region	String	%25s	Sub-region within a country. EXAMPLE A state in the US, a province in Canada.	2
9	Active_Flag	Boolean	%1c	Indicates whether the bank account is active or inactive. EXAMPLE 1 is active, 0 is inactive.	2
10	Business_Segment_X	String	%25s	Reserved field that shall be used for business segments/structures. The "X" signifies an organizational level. Each number used to replace the "X" is associated with a unique reference level. EXAMPLE Division, department, business unit, purchasing organization, project, legal entity.	1

The primary key for BAS_Bank_Account is listed in Table 39.

Table 39 — Identifiers in BAS_Bank_Account

No.	Name	Identifier	Referenced field	Referenced table
1	Bank_Account_Number	PK	not applicable	not applicable

4.4.20 BAS_Tax_Regulatory

The regulatory information related to taxes, including regulator country, region, name and role, is contained in Table 40. This table is level 1.

Table 40 — BAS_Tax_Regulatory

No.	Name	Data-type	Repre-sentation	Description	Level
1	Regulator_Code	String	%25s	Code of the regulator or jurisdiction.	1
2	Regulator_Country	String	%3s	Country code where the regulator is located (in accordance with ISO 3166-1).	1
3	Regulator_Region	String	%25s	Sub-region within a country. EXAMPLE A state in the US, a province in Canada.	1
4	Regulator_Name	String	%100s	Name of the regulator for which tax is withheld or accrued.	1
5	Regulator_Role	String	%20s	Role of the regulator, whether federal, regional or local.	1
6	Regulator_Payable_Account_NUM	String	%100s	GL account used to reflect the amounts payable to the regulator. Shall match the GL_Account_Number in the BAS_Chart_Of_Accounts table (see Table 20).	1

© ISO 2019 – All rights reserved
Documents
Document Sharing Hub
Full document details: BS ISO 21378:2019

Table 40 *(continued)*

No.	Name	Data-type	Repre-sentation	Description	Level
7	Regulator_Accrual_Account_NUM	String	%100s	GL account used to reflect the accruals due to the regulator. Shall match the GL_Account_Number in the BAS_Chart_Of_Accounts table (see Table 20).	1
8	Regulator_Expense_Account_NUM	String	%100s	GL account used to reflect the expenses related to the regulator. Shall match the GL_Account_Number in the BAS_Chart_Of_Accounts table (see Table 20).	1
9	Regulator_ID	String	%25s	ID assigned/generated by the regulator for the reporting organization to the regulator.	1
10	Regulator_Reporting_ORG	String	%25s	Code for the reporting organization. Shall match the Business_Segment_Code in the BAS_Business_Segment table (see Table 4).	1
11	Regulator_Active_Flag	Boolean	%1c	Indicates whether the Regulator_Code is active or inactive. EXAMPLE 1 is active, 0 is inactive.	1
12	Business_Segment_X	String	%25s	Reserved field that shall be used for business segments/structures. The "X" signifies an organizational level. Each number used to replace the "X" is associated with a unique reference level. EXAMPLE Division, department, business unit, purchasing organization, project, legal entity.	1

The primary key and reference identifiers, with the related referenced fields and tables, for BAS_Tax_Regulatory are listed in Table 41.

Table 41 — Identifiers in BAS_Tax_Regulatory

No.	Name	Iden-tifier	Referenced field	Referenced table
1	Regulator_Code	PK	not applicable	not applicable
6	Regulator_Payable_Account_NUM	REF	GL_Account_Number	BAS_Chart_Of_Accounts
7	Regulator_Accrual_Account_NUM	REF	GL_Account_Number	BAS_Chart_Of_Accounts
8	Regulator_Expense_Account_NUM	REF	GL_Account_Number	BAS_Chart_Of_Accounts
10	Regulator_Reporting_ORG	REF	Business_Segment_Code	BAS_Business_Segment

4.4.21 BAS_Tax_Type

The detailed information on the tax types used by the business is contained in Table 42. The tables in the AR, SAL, AP and PUR modules contain four tax types, which can meet the requirements in most cases of the business. Tax types could be tax in country level, state level, county level or local level, or could be tax related to a transaction (e.g. sales tax, value added tax, tariff). This table is level 1.

© ISO 2019 – All rights reserved

Documents
Document Sharing Hub
Full document details: BS ISO 21378:2019

Table 42 — BAS_Tax_Type

No.	Name	Data-type	Repre-sentation	Description	Level
1	Tax_Type_Code	String	%25s	Code used to refer to this tax type, used as a key or cross-reference in files. EXAMPLE 004 is the income tax, 005 is the tariff, 006 is the value added tax.	1
2	Tax_Name	String	%100s	Name of the tax type. EXAMPLE Income tax, tariff, value added tax.	1
3	Regulator_Code	String	%25s	Code for the regulator for this tax. Shall match the Regulator_Code in the BAS_Tax_Regulatory table.	1
4	Tax_Type_Description	String	%100s	Description of the tax type.	1
5	Tax_Code_Description	String	%1000s	Description of the tax code, which is a sub-division of the tax type. EXAMPLE Lower percentage applicable for common goods.	1
6	Tax_Percentage	Decimal	%11.6f	Default percentage for this combination of tax type and tax code. Can use the Extracted_Date from the BAS_Profile table (see Table 48).	1
7	Business_Segment_X	String	%25s	Reserved field that shall be used for business segments/structures. The "X" signifies an organizational level. Each number used to replace the "X" is associated with a unique reference level. EXAMPLE Division, department, business unit, purchasing organization, project, legal entity.	1

The primary key and reference identifiers, with the related referenced fields and tables, for BAS_Tax_Type are listed in Table 43.

Table 43 — Identifiers in BAS_Tax_Type

No.	Name	Identifier	Referenced field	Referenced table
1	Tax_Type_Code	PK	not applicable	not applicable
3	Regulator_Code	REF	Regulator_Code	BAS_Tax_Regulatory

4.4.22 BAS_Customized_ACC_Segment

An Account Segment is a customized file item, which includes the information of the customized account segments that are not fixed account segments and of which no other table contains their description information (e.g. region type) as given in Table 44. This table is used together with BAS_Customized_ACC_Value (see Table 46). This table is level 2.

© ISO 2019 – All rights reserved
Documents
Document Sharing Hub
Full document details: BS ISO 21378:2019

Table 44 — BAS_Customized_ACC_Segment

No.	Name	Data-type	Repre-sentation	Description	Level
1	Customized_ACC_Segment_Code	String	%60s	Code for the customized account segment that audit data need to be used. This does not include the fixed account segment having been identified. EXAMPLE Unlike customer, budget information is not included in the BAS module as an individual table, therefore budget can be identified as a customized account segment.	1
2	Customized_ACC_Segment_Name	String	%200s	Customized account segment name that audit data need to be used. EXAMPLE Budget records, planned revenue, expenditure.	1
3	Customized_ACC_Description	String	%1000s	Customized account segment description that audit data need to be used. EXAMPLE Budget can be described as the annual plan of aggregated fiscal revenue and expenditure for a state, which is verified and approved through legal procedures.	2
4	Customized_ACC_Encoding_Rule	String	%20s	Encoding rules of the value of a customized account segment. If the encoding rule has a hierarchy feature, each level is separated by "-". EXAMPLE Budget (with a 1-digit code, e.g. 1) can be subdivided into financial budget (with a 2-digit code, e.g. 01) and construction budget (with a 2-digit code, e.g. 05), with the financial budget containing budgeted revenue (with a 2-digit code, e.g. 03) and budgeted expenditure (with a 2-digit code, e.g. 04), which are the third-level segments. In this case, the Customized_ACC_Encoding_Rule is 1-2-2.	2
5	Hierarchy_Flag	Boolean	%1c	Whether or not the table value has a hierarchy feature. EXAMPLE 1 is yes, 0 is no.	2
6	Active_Flag	Boolean	%1c	Indicates whether the Customized_ACC_Segment_Code is active or inactive. EXAMPLE 1 is active, 0 is inactive.	2

The primary key for BAS_Customized_ACC_Segment is listed in Table 45.

Table 45 — Identifiers in BAS_Customized_ACC_Segment

No.	Name	Identifier	Referenced field	Referenced table
1	Customized_ACC_Segment_Code	PK	not applicable	not applicable

4.4.23 BAS_Customized_ACC_Value

The information from the customized account segment value is contained in Table 46. This table is level 2.

© ISO 2019 – All rights reserved

Documents
Document Sharing Hub
Full document details: BS ISO 21378:2019

Table 46 — BAS_Customized_ACC_Value

No.	Name	Data-type	Repre-sentation	Description	Level
1	Customized_ACC_Value_Code	String	%60s	Code for the customized account segment value. If the Customized_ACC_Encoding_Rule is 1-2-2, the corresponding budget-financial budget-budgeted expenditure is 10104.	1
2	Customized_ACC_Segment_Code	String	%60s	Associated with the BAS_Customized_ACC_Segment table. Shall match the Customized_ACC_Segment_Code in the BAS_Customized_ACC_Segment table (see Table 44).	1
3	Customized_ACC_Value_Name	String	%200s	Name of the account segment value of each file. EXAMPLE Budget-financial budget-budgeted expenditure.	1
4	ACC_Value_Description	String	%1000s	Detailed description of the account segment value.	2
5	Parent_ACC_Value_Code	String	%60s	Code for the parent customized account segment value. Shall match the Customized_ACC_Value_Code in the BAS_Customized_ACC_Value table (see Table 46).	1
6	Customized_ACC_Value_Hierarchy	String	%2s	Level of the current value in the file structure. EXAMPLE 1 is the highest.	2

The primary key and reference identifiers, with the related referenced fields and tables, for BAS_Customized_ACC_Value are listed in Table 47.

Table 47 — Identifiers in BAS_Customized_ACC_Value

No.	Name	Identifier	Referenced field	Referenced table
1	Customized_ACC_Value_Code	PK	not applicable	not applicable
2	Customized_ACC_Segment_Code	REF	Customized_ACC_Segment_Code	BAS_Customized_ACC_Segment
5	Parent_ACC_Value_Code	REF	Customized_ACC_Value_Code	BAS_Customized_ACC_Value

4.4.24 BAS_Profile

The industry and software version information is contained in Table 48. This table contains information related to the profile of the data being collected. For example, when the financial data of 2016 from an auditee is extracted using SAP XXX ERP System in 2017.1.16, there should be a record with the Profile_Name “XXX_2016”, Fiscal_Year “2016”, Developer_Name “SAP”, Software_Name “SAP_S/4”, Software_Version “2.0”, Functional_Currency “CNY, Standard_Version “ISO 21378”, Extracted_Date “2017-01-16”. This table is level 2.

© ISO 2019 – All rights reserved
Documents
Document Sharing Hub
Full document details: BS ISO 21378:2019

Table 48 — BAS_Profile

No.	Name	Data-type	Repre-sentation	Description	Level
1	Profile_Number	String	%5s	Number of the current data collection. This number is generated either by manual input or by the system.	1
2	Profile_Name	String	%30s	Name of the current data collection.	1
3	Fiscal_Year	String	%4c	Fiscal year in which the calendar date occurs. The date shall be shown as YYYY-MM-DD in the extended format. The YYYY indicates a four-digit year (in accordance with ISO 8601-1).	2
4	Accounting_Entity	String	%60s	Legal name of an accounting entity.	2
5	Industry	String	%20s	Corresponding industry name under a superior sector code.	2
6	Developer_Name	String	%200s	Name of accounting and/or ERP system software developer.	2
7	Software_Name	String	%200s	Name of accounting and/or ERP system software products.	2
8	Software_Version	String	%20s	Accounting and/or ERP system software version.	2
9	Functional_Currency_Code	String	%3c	Functional or group currency used in accounting and/or ERP system software (in accordance with ISO 4217).	2
10	Standard_Version	String	%30s	Standard issuing number of the standard(s) with which the current output files are consistent. EXAMPLE ISO 21378.	2
11	Extracted_Date	Date	%10c	Date of the data extraction.	1
12	Time_Zone	String	%6c	Indicates the difference between the local time and UTC of a day. The representation of the difference can be expressed in hours and minutes, or hours only. The Time_Zone shall be shown as ±hh:mm in the extended format (in accordance with ISO 8601-1). EXAMPLE Newfoundland's time zone is −03:30, Beijing's time zone is +08:00.	1
13	Business_Segment_X	String	%25s	Reserved field that shall be used for business segments/structures. The "X" signifies an organizational level. Each number used to replace the "X" is associated with a unique reference level. EXAMPLE Division, department, business unit, purchasing organization, project, legal entity.	1

© ISO 2019 – All rights reserved

Documents
Document Sharing Hub
Full document details: BS ISO 21378:2019

The primary key for BAS_Profile is listed in Table 49.

Table 49 — Identifiers in BAS_Profile

No.	Name	Identifier	Referenced field	Referenced table
1	Profile_Number	PK	not applicable	not applicable

4.4.25 Base standard data questionnaire

The following information is integral to the understanding and use of the relevant data. A company's financial management, in consultation with its IT personnel, should address each of the items every time the data are provided, if applicable. These questions are not intended to be all-inclusive and are presented as examples only. Prior to implementing this data standard, an evaluation should be made of the reliability of the system data through the use of controls and segregation of duties testing, which are not covered by this questionnaire. This questionnaire is informative.

Consider the following questions.

a) Are there any exceptions, deviations or complexities in applying this data standard, for example:

   1) file formats (e.g. not pipe-delimited, no header row);

   2) field formats (e.g. no decimal point in numeric fields, alternative format for dates or times);

   3) records that are identified as non-financial (e.g. statistical or budget items);

   4) records that should have been included but were not available for this extract;

   5) fields (level 1) of level 1 tables and of required level 2 tables that should have been included but were not available;

   6) support systems used to create final data that is then transferred into the ERP system;

   7) audit trail for data transferred between systems.

b) What fields have been calculated rather than those supplied by the system?

c) What are the names, titles and user IDs associated with the financial management team (CFO and controller)?

d) Has the company had any significant acquisition, divestiture or system migration activity that can affect the data?

e) What are the policies and procedures around the use and reuse of user IDs?

f) What are the policies and procedures around the use and reuse of business segment codes when business units are acquired or disposed of?

g) What is the process for identifying business units and related hierarchies, and at what level are they being measured (e.g. geography, product line)?

h) What is the process for identifying business segments and related hierarchies? What level are they being measured (e.g. account, profit centre, division, business unit, fund, program, branch, project)?

i) Is it typical for employees to post entries on the weekends during the close process? If so, which weekends?

j) What is the closing schedule? How many days (calendar) are taken to close each quarter or period? What is the end date of each accounting period?

k) What are the observed company holidays?

© ISO 2019 – All rights reserved
Documents
Document Sharing Hub
Full document details: BS ISO 21378:2019

l) Does the company participate in international business? If so, how does the company account for this? Does the company record or issue financial reports for domestic and foreign business? Is there a situation where multiple accounting methods are being used for different business units?

m) Is the company a group company? If so, how many companies are included under one subsidiary? Are accounts set up separately according to each subsidiary, or unified controlled? Can the sub-account be set up by the subsidiary itself?

n) Does the company have functional business units? Functional business units are business structures that are segmented by the type of business (e.g. sales unit, procurement unit, inventory unit, cost unit (or cost centre), profit centre). Functional business units may be accounted horizontally across the organization.

o) Within a department, do sectors exist that are independent of the organization's internal accounting department (e.g. the ministry of finance, sales department under a company)?

p) Does the ERP system store the individual accounting period table? Is the accounting period defined as annual or quarterly?

q) How is the customer classified? Does the classification have a hierarchical relationship?

r) How is the supplier classified? Does the classification have a hierarchical relationship?

s) Does the chart of accounts table specify the fields Account_Type, Account_Subtype and FS_Caption?

t) Which type of currency (e.g. amount, local amount, reporting amount) does the ERM system account for?

u) What are the ERP system measurement unit types (e.g. the basic measurement unit, inventory measurement unit, purchasing measurement unit, sales measurement unit, cost measurement unit)?

v) Does the ERP system record the tax authorities' information relating to the company itself? What information is recorded?

4.5 General Ledger module

4.5.1 General

The General Ledger (GL) module is used to record the financial impacts of business processes. In most ERP systems and accounting packages, the GL is the module where transactional-level data are accumulated, summarized, stored and staged for reporting. Additionally, the closing entries for both periods and year-end are contained within these tables.

The tables within the GL module and select key fields used for interactions with the BAS module are illustrated in Figure 2.

© ISO 2019 – All rights reserved

Documents
Document Sharing Hub
Full document details: BS ISO 21378:2019

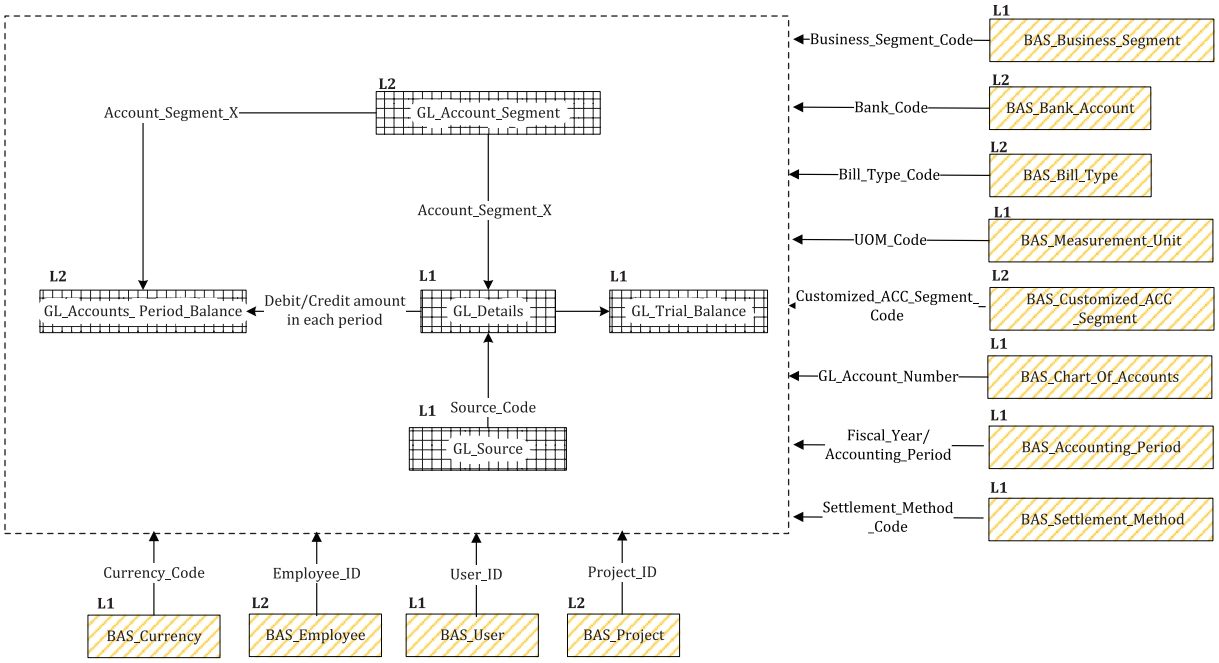

Key

Components

table in the BAS module

table in the GL module

Connections and lines

---- tables within the GL module

→ reference relationship

L1 table containing information that the auditor should leverage when auditing

L2 table containing information that the auditor can leverage if the scope of the audit requires this type of data

Figure 2 — Table relation diagram of the GL module

4.5.2 GL_Trial_Balance

All the ledger account balance information of the ADCS is contained in Table 50. The GL_Trial_Balance file shall contain the ending balances at a point in time. The GL_Trial_Balance should be extracted at the same time as the GL_Details to prevent differences in transactions and balances. This table is level 1.

Table 50 — GL_Trial_Balance

No.	Name	Data-type	Repre-sentation	Description	Level
1	GL_Account_Number	String	%100s	Number of the GL account. This number is often generated by the system. Shall match the GL_Account_Number used in the BAS_Chart_Of_Accounts table (see Table 20).	1

© ISO 2019 – All rights reserved
Documents
Document Sharing Hub
Full document details: BS ISO 21378:2019

Table 50 *(continued)*

No.	Name	Data-type	Repre-sentation	Description	Level
2	Fiscal_Year	String	%4c	Fiscal year in which the Balance_As_Of_Date occurs. The year shall be shown in four digits as YYYY, which is part of the extended format and the YYYY-MM-DD from ISO 8601-1. Shall match the Fiscal_Year in the BAS_Accounting_Period table (see Table 22).	1
3	Accounting_Period	String	%15s	Accounting period in which the Balance_As_Of_Date occurs. EXAMPLE W1–W53 for weekly periods, M1–M12 for monthly periods, Q1–Q4 for quarterly periods, from any beginning date to any ending date. Shall match the Accounting_Period in the BAS_Accounting_Period table (see Table 22).	1
4	Balance_As_Of_Date	Date	%10c	Date through which the provided balance reflects account activity. EXAMPLE If a report is run for activity through 20141231 on 20150122, the date recorded will be 20141231.	1
5	Functional_Currency_Code	String	%3c	Code of the functional or group currency related to the balance (in accordance with ISO 4217). Shall match the Currency_Code in the BAS_Currency table (see Table 30).	1
6	Reporting_Currency_Code	String	%3c	Code for the currency used for non-consolidated reporting as opposed to functional, consolidated reporting, local or actual amounts (in accordance with ISO 4217). Shall match the Currency_Code in the BAS_Currency table (see Table 30).	1
7	Local_Currency_Code	String	%3c	Code for the currency used for local country reporting requirements (in accordance with ISO 4217). Shall match the Currency_Code in the BAS_Currency table (see Table 30).	1
8	Transaction_Currency_Code	String	%3c	Code for the currency used in the actual transaction (in accordance with ISO 4217). Shall match the Currency_Code in the BAS_Currency table (see Table 30).	1

© ISO 2019 – All rights reserved

Documents
Document Sharing Hub
Full document details: BS ISO 21378:2019

Table 50 *(continued)*

No.	Name	Data-type	Repre-sentation	Description	Level
9	Beginning_Functional_Amount	Decimal	%22.4f	Beginning balance amount of the period (same amount as the ending balance from the prior period) recorded in the functional or group currency. No multi-currency translation should be performed on this amount because all transactions are recorded in a single currency.	1
10	Beginning_Reporting_Amount	Decimal	%22.4f	Beginning balance amount for the period in the currency used for statutory reporting.	2
11	Beginning_Local_Amount	Decimal	%22.4f	Beginning balance amount for the period in the local currency used for multi-currency tracking.	2
12	Beginning_Transaction_Amount	Decimal	%22.4f	Beginning balance amount for the period in the transaction currency used for multi-currency tracking.	2
13	Ending_Functional_Amount	Decimal	%22.4f	Ending balance amount for the period recorded in the functional or group currency. No multi-currency translation should be performed on this amount because all transactions are recorded in a single currency.	1
14	Ending_Reporting_Amount	Decimal	%22.4f	Ending balance amount for the period in the currency used for statutory reporting.	2
15	Ending_Local_Amount	Decimal	%22.4f	Ending balance amount for the period in the local currency used for multi-cur-rency tracking.	2
16	Ending_Transaction_Amount	Decimal	%22.4f	Ending balance amount for the period in the transaction currency used for multi-currency tracking.	2
17	Business_Segment_X	String	%25s	Reserved field that shall be used for business segments/structures. The "X" signifies an organizational level. Each number used to replace the "X" is associated with a unique reference level. EXAMPLE Division, department, business unit, purchasing organization, project, legal entity.	1

The primary keys and reference identifiers, with the related referenced fields and tables, for GL_Trial_Balance are listed in Table 51.

Table 51 — Identifiers in GL_Trial_Balance

No.	Name	Identifier	Referenced field	Referenced table
1	GL_Account_Number	PK/REF	GL_Account_Number	BAS_Chart_Of_Accounts
2	Fiscal_Year	PK/REF	Fiscal_Year	BAS_Accounting_Period
3	Accounting_Period	PK/REF	Accounting_Period	BAS_Accounting_Period
5	Functional_Currency_Code	REF	Currency_Code	BAS_Currency

© ISO 2019 – All rights reserved
Documents
Document Sharing Hub
Full document details: BS ISO 21378:2019

Table 51 *(continued)*

No.	Name	Identifier	Referenced field	Referenced table
6	Reporting_Currency_Code	REF	Currency_Code	BAS_Currency
7	Local_Currency_Code	REF	Currency_Code	BAS_Currency
8	Transaction_Currency_Code	REF	Currency_Code	BAS_Currency

4.5.3 GL_Details

All of the journal entry details for each transaction of the ADCS (e.g. associated journal entry ID, associated account number, debits or credits associated with the journal entry line) are contained in Table 52. This table should be at the journal entry line level. This table is level 1.

Table 52 — GL_Details

No.	Name	Data-type	Repre-sentation	Description	Level
1	Journal_ID	String	%100s	Unique identifier for the journal entry. Typically auto-generated by the system.	1
2	Journal_Number	String	%100s	Number of the journal entry (e.g. including serial number, document type, date).	1
3	GL_Account_Number	String	%100s	Number of the GL account. Shall match the GL_Account_Number used in the BAS_Chart_Of_Accounts table (see Table 20).	1
4	Fiscal_Year	String	%4c	Fiscal year in which the Effective_Date occurs. The year shall be shown in four digits as YYYY, which is part of the extended format and the YYYY-MM-DD from ISO 8601-1. Shall match the Fiscal_Year in the BAS_Accounting_Period table (see Table 22).	1
5	Accounting_Period	String	%15s	Accounting period in which the Effective_Date occurs. EXAMPLE W1–W53 for weekly periods, M1–M12 for monthly periods, Q1–Q4 for quarterly periods, from any beginning date to any ending date. Shall match the Accounting_Period in the BAS_Accounting_Period table (see Table 22).	1
6	Effective_Date	Date	%10c	Date of the journal entry, no matter when the entry is received or created. This sometimes refers to the accounting date or accounting effective date. EXAMPLE If the user wants to see the financial results for the period ending March 5, 20XX, the journal entry may be created on any day during the open period and be assigned to the period ending March 5, 20XX.	1

© ISO 2019 – All rights reserved

Documents
Document Sharing Hub
Full document details: BS ISO 21378:2019

Table 52 *(continued)*

No.	Name	Data-type	Repre-sentation	Description	Level
7	Journal_Line_Number	String	%100s	Number of the line within a journal entry. This number is generated either by manual input or by the system.	1
8	JE_Type_Code	String	%60s	Code for the journal entry type. Shall match the JE_Type_Code in the BAS_Journal_Entry_Type table (see Table 24).	2
9	JE_Header_Description	String	%1000s	Description of the entire journal entry as described by the journal entry header.	1
10	JE_Line_Description	String	%1000s	Description of the individual line within the journal entry.	1
11	Source_Code	String	%25s	Code for the source from which the journal entry originated. EXAMPLE Sales journal, cash receipts journal, general journal, payroll journal, accountant manual entry, spreadsheet. Shall match the Source_Code in the GL_Source table (see Table 54).	1
12	Bill_Number	String	%100s	Number of the bill. A bill usually includes bank drafts, promissory notes and checks. A bill may be issued by the drawer who agreed upon themselves or entrusts the drawee at sight. A specified date to the payee or bearer unconditionally pays a certain amount of securities. This number is generated either by manual input or by the system.	2
13	Bill_Type_Code	String	%60s	Type of bill. EXAMPLE Bank drafts, promissory notes, checks. Shall match the Bill_Type_Code in the BAS_Bill_Type table (see Table 26).	2
14	Bill_Date	Date	%10c	Date of the bill.	2
15	Quantity	Decimal	%22.4f	Quantity of items referenced in the journal entry line. When the GL_Account_Number is for inventories or fixed assets, this field is effective. If not, this field is NULL.	2
16	UOM_Code	String	%80s	Code for the physical measurement scale for the inventory and PPE referred to as a "unit of measurement (UOM)". Shall match the UOM_Code in the BAS_Measurement_Unit table (see Table 32).	2

© ISO 2019 – All rights reserved
Documents
Document Sharing Hub
Full document details: BS ISO 21378:2019

Table 52 *(continued)*

No.	Name	Data-type	Repre-sentation	Description	Level
17	Unit_Price	Decimal	%22.8f	Per unit price of the inventory or PPE. This field is associated with Quantity and Amount. EXAMPLE If the account is inventory or PPE, Quantity can be multiplied by Unit_Price to get total line Amount.	2
18	Functional_Amount	Decimal	%22.4f	Transaction monetary amount recorded in the functional or group currency. No multi-currency translation should be performed on this amount because all transactions are recorded in a single currency.	1
19	Functional_Currency_Code	String	%3c	Code of the functional or group currency related to the amount (in accordance with ISO 4217). Shall match the Currency_Code in the BAS_Currency table (see Table 30).	1
20	Reporting_Amount	Decimal	%22.4f	Transaction monetary amount recorded in the reporting currency.	2
21	Reporting_Currency_Code	String	%3c	Code for the currency used for non-consolidated reporting as opposed to functional, consolidated reporting, local or actual amounts (in accordance with ISO 4217). Shall match the Currency_Code in the BAS_Currency table (see Table 30).	2
22	Local_Amount	Decimal	%22.4f	Amount in the local country currency where the transaction originated.	2
23	Local_Currency_Code	String	%3c	Code for the currency used for local country reporting requirements (in accordance with ISO 4217). EXAMPLE USD, EUR. Shall match the Currency_Code in the BAS_Currency table (see Table 30).	2
24	Transaction_Amount	Decimal	%22.4f	Amount in the transaction currency.	2
25	Transaction_Currency_Code	String	%3c	Code for the currency used in the trans-action (in accordance with ISO 4217). Shall match the Currency_Code in the BAS_Currency table (see Table 30).	2
26	Settlement_Method_Code	String	%60s	Code value or indicator of the settlement method used for cash receipt from customers (i.e. sales) and cash payment to suppliers (i.e. purchase). EXAMPLE Check, wire transfer, cash. Shall match the Settlement_Method_Code in the BAS_Settlement_Method table (see Table 28).	2
27	Credit_Debit_Indicator	String	%1c	Indicates whether the amount is a credit or a debit. EXAMPLE C is credit, D is debit.	1

© ISO 2019 – All rights reserved

AVA Documents Document Sharing Hub
Full document details: BS ISO 21378:2019

Table 52 *(continued)*

No.	Name	Data-type	Repre-sentation	Description	Level
28	Reversal_Indicator	String	%1c	Indicates whether this entry is a reversal or to be reversed. EXAMPLE 1 is the entry is a reversal, 2 is the entry is being reversed, an empty (“ ”) is none of the above or system-generated indicators.	1
29	Reversal_Journal_ID	String	%100s	When the Reversal_Indicator = 1, this field identifies the Journal_ID of the entry being reversed.	2
30	Cancellation_Sign	Boolean	%1c	Sign of cancellation of a journal entry already formed but not yet posted. EXAMPLE 0 is entry is not cancelled, 1 is entry is cancelled.	2
31	Created_User_ID	String	%25s	Unique identifier for the person who created the record. Typically auto-generated by the system. Shall match the User_ID in the BAS_User table (see Table 10).	1
32	Created_Date	Date	%10c	Date when the journal entry was created in the system. This should be a system-generated date (rather than a user-created date), when possible. This sometimes refers to the creation date. This date does not necessarily correspond to the date when the journal entry was posted to the GL or the period-end date.	1
33	Created_Time	Time	%8c	Time when the journal entry was created in the system.	2
34	Approved_User_ID	String	%25s	Unique identifier for the person who approved the entry. Typically auto-generated by the system. Shall match the User_ID in the BAS_User table (see Table 10).	2
35	Approved_Date	Date	%10c	Date when the entry was approved.	2
36	Posted_User_ID	String	%25s	Unique identifier for the person who posted the journal entry to the ledger. Typically auto-generated by the system. Shall match the User_ID in the BAS_User table (see Table 10).	2
37	Account_Segment_Employee	String	%60s	Fixed account segment, recording information related to an employee (e.g. loan to corporate officers). The value stored in this field stored is Employee_ID. Shall match the Employee_ID in the BAS_Employee table (see Table 8) through GL_Account_Segment.	2

© ISO 2019 – All rights reserved
Documents
Document Sharing Hub
Full document details: BS ISO 21378:2019