BS ISO 21395-2:2022

BSI Standards Publication

Optics and photonics — Test method for refractive index of optical glasses

Part 2: V-block refractometer method

Documents
Document Sharing Hub

Full document details: BS ISO 21395-2:2022

National foreword

This British Standard is the UK implementation of ISO 21395-2:2022.

The UK participation in its preparation was entrusted to Technical Committee CPW/172, Optics and Photonics.

A list of organizations represented on this committee can be obtained on request to its committee manager.

Contractual and legal considerations

This publication has been prepared in good faith, however no representation, warranty, assurance or undertaking (express or implied) is or will be made, and no responsibility or liability is or will be accepted by BSI in relation to the adequacy, accuracy, completeness or reasonableness of this publication. All and any such responsibility and liability is expressly disclaimed to the full extent permitted by the law.

This publication is provided as is, and is to be used at the recipient's own risk.

The recipient is advised to consider seeking professional guidance with respect to its use of this publication.

This publication is not intended to constitute a contract. Users are responsible for its correct application.

© The British Standards Institution 2022
Published by BSI Standards Limited 2022

ISBN 978 0 539 02651 1

ICS 37.020

Compliance with a British Standard cannot confer immunity from legal obligations.

This British Standard was published under the authority of the Standards Policy and Strategy Committee on 31 March 2022.

Amendments/corrigenda issued since publication

Date	Text affected

Documents
Document Sharing Hub

Full document details: BS ISO 21395-2:2022

INTERNATIONAL STANDARD

ISO 21395-2

First edition
2022-02

Optics and photonics — Test method for refractive index of optical glasses —

Part 2: V-block refractometer method

Optique et photonique — Méthode d'essai pour l'indice de réfraction des verres optiques —

Partie 2: Méthode du réfractomètre à blocs en V

Reference number
ISO 21395-2:2022(E)

Documents
Document Sharing Hub

© ISO 2022

Full document details: BS ISO 21395-2:2022

COPYRIGHT PROTECTED DOCUMENT

© ISO 2022

All rights reserved. Unless otherwise specified, or required in the context of its implementation, no part of this publication may be reproduced or utilized otherwise in any form or by any means, electronic or mechanical, including photocopying, or posting on the internet or an intranet, without prior written permission. Permission can be requested from either ISO at the address below or ISO's member body in the country of the requester.

ISO copyright office
CP 401 • Ch. de Blandonnet 8
CH-1214 Vernier, Geneva
Phone: +41 22 749 01 11
Email: copyright@iso.org
Website: www.iso.org

Published in Switzerland

© ISO 2022 – All rights reserved

Documents
Document Sharing Hub

Full document details: BS ISO 21395-2:2022

Contents

Page

Foreword ... **iv**
Introduction ... **v**
1 Scope ... **1**
2 Normative references ... **1**
3 Terms and definitions ... **1**
4 Principles ... **2**
5 Measuring equipment ... **3**
5.1 General ... 3
5.2 Light source ... 4
5.3 Bandpass filter ... 5
5.4 Slit ... 5
5.5 Collimator lens ... 5
5.6 V-block prism ... 5
5.7 Origin-point reference block ... 6
5.8 Telescope ... 6
5.9 Detector ... 7
5.10 Deviation-angle measuring device ... 7
5.11 Refractive index matching liquid ... 7
6 Shapes of origin-point reference block and specimen ... **7**
6.1 General ... 7
6.2 Apex angle ... 7
6.3 Contact face with V-block prism ... 7
7 Measurement method ... **8**
7.1 Measurement environment ... 8
7.1.1 Temperature ... 8
7.1.2 Atmospheric pressure ... 8
7.2 Measurement ... 8
7.2.1 General ... 8
7.2.2 Preparation for measurement ... 8
7.2.3 Setting of deviation-angle origin point (0°) ... 8
7.2.4 Adjustment of V-block prism ... 9
7.2.5 Measurement of deviation angle ... 9
7.2.6 Calculation of refractive index ... 10
8 Indication ... **10**
9 Test report ... **10**
Annex A (normative) **Refractive index matching liquid** ... **12**
Annex B (informative) **Telescope with autocollimation function** ... **14**
Annex C (normative) **Alternative measurement** ... **15**
Annex D (normative) **Measurement with reference specimen** ... **24**
Bibliography ... **26**

© ISO 2022 – All rights reserved

Documents
Document Sharing Hub
Full document details: BS ISO 21395-2:2022

Foreword

ISO (the International Organization for Standardization) is a worldwide federation of national standards bodies (ISO member bodies). The work of preparing International Standards is normally carried out through ISO technical committees. Each member body interested in a subject for which a technical committee has been established has the right to be represented on that committee. International organizations, governmental and non-governmental, in liaison with ISO, also take part in the work. ISO collaborates closely with the International Electrotechnical Commission (IEC) on all matters of electrotechnical standardization.

The procedures used to develop this document and those intended for its further maintenance are described in the ISO/IEC Directives, Part 1. In particular, the different approval criteria needed for the different types of ISO documents should be noted. This document was drafted in accordance with the editorial rules of the ISO/IEC Directives, Part 2 (see www.iso.org/directives).

Attention is drawn to the possibility that some of the elements of this document may be the subject of patent rights. ISO shall not be held responsible for identifying any or all such patent rights. Details of any patent rights identified during the development of the document will be in the Introduction and/or on the ISO list of patent declarations received (see www.iso.org/patents).

Any trade name used in this document is information given for the convenience of users and does not constitute an endorsement.

For an explanation of the voluntary nature of standards, the meaning of ISO specific terms and expressions related to conformity assessment, as well as information about ISO's adherence to the World Trade Organization (WTO) principles in the Technical Barriers to Trade (TBT), see www.iso.org/iso/foreword.html.

This document was prepared by Technical Committee ISO/TC 172, *Optics and photonics*, Subcommittee SC 3, *Optical materials and components*.

A list of all parts in the ISO 21395 series can be found on the ISO website.

Any feedback or questions on this document should be directed to the user's national standards body. A complete listing of these bodies can be found at www.iso.org/members.html.

© ISO 2022 – All rights reserved
Documents
Document Sharing Hub
Full document details: BS ISO 21395-2:2022

Introduction

This document specifies the method to determine the refractive index of optical glasses with the V-block refractometer. Some explanation of the V-block refractometer can be found in Reference [3]. The refractive index of optical glasses is the most important characteristic for the optical elements manufactured from them.

Regarding the standardization of the method of refractive index measuring method of optical glasses, the minimum deviation method is defined as ISO 21395-1.

The minimum deviation method is most accurate in refractive index measurement but requires an advanced technical skill to prepare a specimen with a precise shape and to measure the refractive index.

In contrast the V-block refractometer method is easier and faster when preparing a specimen and requires less technical skill for measurement. Therefore, this method is commonly used by people checking the quality of the optical glass products on a daily basis.

This document is intended to aid in measuring the refractive index of optical glasses accurately and improving the communications between raw optical glass suppliers and optical element manufacturers as well.

© ISO 2022 – All rights reserved

Documents
Document Sharing Hub
Full document details: BS ISO 21395-2:2022

Documents
Document Sharing Hub

Optics and photonics — Test method for refractive index of optical glasses —

Part 2:
V-block refractometer method

1 Scope

This document specifies a method to determine the refractive index of optical glass with the accuracy within 3×10^{-5} at the wavelength range from 365 nm to 2 400 nm by using the V-block refractometer method.

While this document can be used for non-glass materials, the user is informed that only optical glass has been considered in the development of this document, and other materials can have issues, which have not been taken into consideration.

2 Normative references

The following documents are referred to in the text in such a way that some or all of their content constitutes requirements of this document. For dated references, only the edition cited applies. For undated references, the latest edition of the referenced document (including any amendments) applies.

ISO 280, *Essential oils — Determination of refractive index*

ISO 9802, *Raw optical glass — Vocabulary*

ISO 21395-1, *Optics and photonics — Test method for refractive index of optical glasses — Part 1: Minimum deviation method*

ISO 80000-1, *Quantities and units — Part 1: General*

ISO 80000-3, *Quantities and units — Part 3: Space and time*

3 Terms and definitions

For the purposes of this document, the terms and definitions given in ISO 9802, ISO 80000-1, ISO 80000-3 and the following apply.

ISO and IEC maintain terminological databases for use in standardization at the following addresses:

— ISO Online browsing platform: available at https://www.iso.org/obp

— IEC Electropedia: available at https://www.electropedia.org/

3.1
V-block prism
prism manufactured from optical glass material with a known refractive index

3.2
refractive index matching liquid
transparent liquid having the refractive index close to that of the specimen

© ISO 2022 – All rights reserved

Documents
Document Sharing Hub
Full document details: BS ISO 21395-2:2022

4 Principles

As shown in Figure 1 a), when a beam aligned perpendicular to the entrance face transmits through the V-block prism, it is refracted at the interface between the V-block prism and the specimen and exits from the exit face nominally parallel to the entrance face. The relationship among the deviation angle of the emergent beam to the incident beam, γ, the relative refractive index of the V-block prism to the measurement atmosphere, N, and the relative refractive index of the specimen to the measurement atmosphere, n, is expressed by the following Formula (1):

$$\gamma = \arcsin \frac{\sqrt{2 \times n^2 - N^2} - \sqrt{3 \times N^2 - 2 \times n^2}}{2} \tag{1}$$

where

n is the relative refractive index of the specimen to the measurement atmosphere;

N is the relative refractive index of the V-block prism to the measurement atmosphere;

γ is the deviation angle.

NOTE In general, the symbol of the refractive index is the lowercase n. However, this document intentionally uses the capital letter N for the relative refractive index of the V-block prism to make it more distinct from that of the specimen.

The sign of the deviation angle of the emergent beam shall be positive (+) for upward deviation (that is, $n > N$) and negative (–) for downward deviation ($n < N$) respectively, relative to the incident beam.

Therefore, by measuring γ, n can be obtained by calculation.

This principle is also applicable when the incident beam angle is controlled so that the emergent beam is perpendicular to the exit face of the V-block prism. Therefore, as shown in Figure 1b), it is also possible to calculate the refractive index based on the measurement result of the deviation angle of the incident beam to the emergent beam.

7.2.6 provides the formula for the calculation of n.

© ISO 2022 – All rights reserved
Documents
Document Sharing Hub
Full document details: BS ISO 21395-2:2022

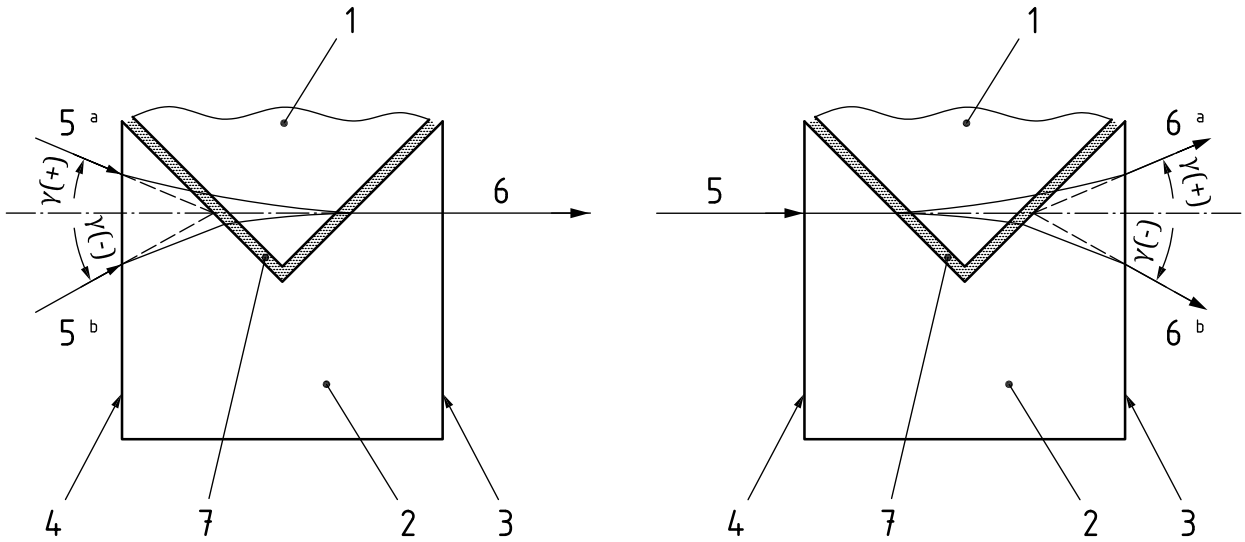

a) Deviation angle measurement on exit side

b) Deviation angle measurement on entrance side

Key

1 specimen (with relative refractive index, n)
2 V-block prism (with relative refractive index, N)
3 exit face
4 entrance face
5 incident beam
6 emergent beam
7 refractive index matching liquid
γ deviation angle
[a] $n > N$.
[b] $n < N$.

Figure 1 — Principle of V-block method

In order for Formula (1) to satisfy the required tolerance indicated in Clause 1 (i.e., within 3×10^{-5}), the shape of the V-block prism and the specimen shall be manufactured following to 5.6 and 6.1, respectively.

5 Measuring equipment

5.1 General

The measuring equipment is composed of the elements and instruments shown in Figure 2.

© ISO 2022 – All rights reserved

Documents
Document Sharing Hub
Full document details: BS ISO 21395-2:2022

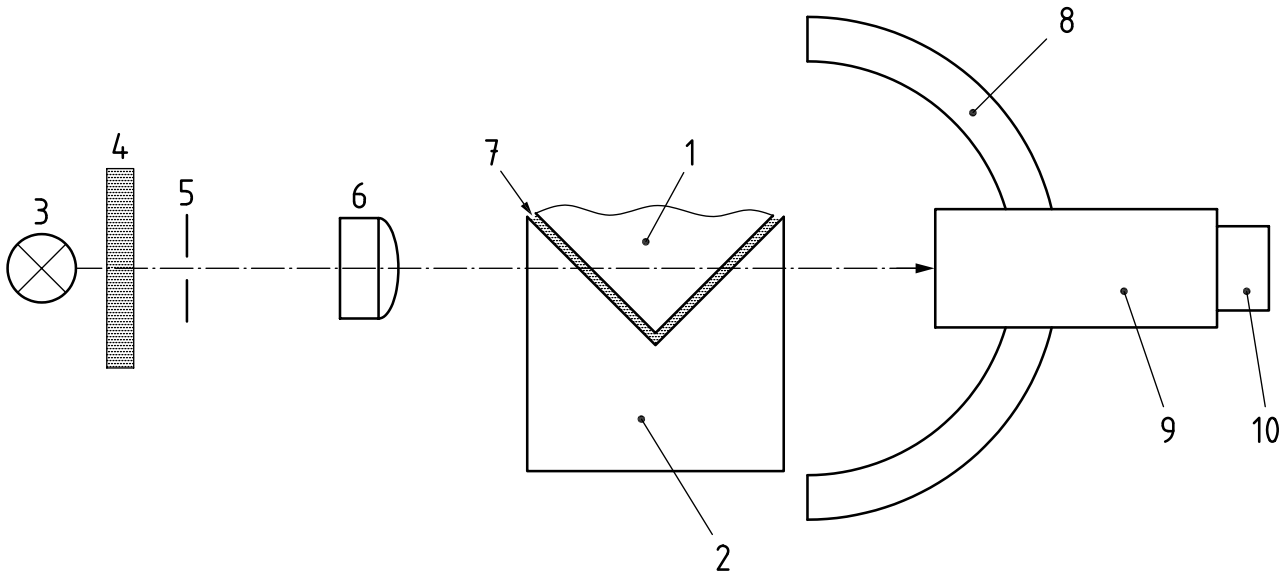

Key

1	specimen or origin point reference block	6	collimator lens
2	V-block prism	7	refractive index matching liquid
3	light source	8	deviation-angle measurement device (scale plate)
4	bandpass filter	9	telescope
5	slit	10	detector (or human eye)

Figure 2 — Outline of V-block measurement equipment

Figure 2 illustrates the configuration in which the direction of the incident beam is fixed as shown in Figure 1 a). When measuring the deviation angle in the case of Figure 1 b), the deviation-angle measurement device (Key 8) shall be attached not to the telescope but to the light source.

The details of the components are described in 5.2 to 5.10.

5.2 Light source

The sources of the spectral/optical radiation should be discharge lamps of mercury, hydrogen, helium, rubidium, caesium or cadmium, or the He-Ne or Nd:YAG laser specified in ISO 7944[1]. The spectral lines shown in Table 1 as the measurement wavelength are used with the bandpass filter of respective wavelength(s). It is necessary to select the light source considering the light transmittance of the V-block prism and the specimen.

It is permissible to use a light source having a wavelength different from those specified in Table 1, or a light source combining a continuous spectral light source and a monochromator/bandpass filter. However, the wavelength deviation due to the finite bandwidth shall be considered when using alternative light sources.

Table 1 — Wavelength and spectral light source

Wavelength nm	Spectral line	Light source
365,01	i	Mercury discharge tube
404,66	h	Mercury discharge tube
435,83	g	Mercury discharge tube
479,99	F'	Cadmium discharge tube

© ISO 2022 – All rights reserved
Documents
Document Sharing Hub
Full document details: BS ISO 21395-2:2022