BS ISO 21573-2:2020

BSI Standards Publication

Building construction machinery and equipment — Concrete pumps

Part 2: Procedure for examination of technical parameters

Documents
Document Sharing Hub

Full document details: BS ISO 21573-2:2020

National foreword

This British Standard is the UK implementation of ISO 21573-2:2020.

The UK participation in its preparation was entrusted to Technical Committee B/513, Construction equipment and plant and site safety.

A list of organizations represented on this committee can be obtained on request to its committee manager.

This publication does not purport to include all the necessary provisions of a contract. Users are responsible for its correct application.

© The British Standards Institution 2021
Published by BSI Standards Limited 2021

ISBN 978 0 580 99817 1

ICS 91.220

Compliance with a British Standard cannot confer immunity from legal obligations.

This British Standard was published under the authority of the Standards Policy and Strategy Committee on 28 February 2021.

Amendments/corrigenda issued since publication

Date	Text affected

Documents
Document Sharing Hub

Full document details: BS ISO 21573-2:2020

INTERNATIONAL STANDARD

ISO 21573-2

Second edition
2020-12

Building construction machinery and equipment — Concrete pumps —

Part 2: Procedure for examination of technical parameters

Machines et matériels pour la construction des bâtiments — Pompes à béton —

Partie 2: Procédure pour la détermination des paramètres techniques

Reference number
ISO 21573-2:2020(E)

Documents
Document Sharing Hub
© ISO 2020

Full document details: BS ISO 21573-2:2020

COPYRIGHT PROTECTED DOCUMENT

© ISO 2020

All rights reserved. Unless otherwise specified, or required in the context of its implementation, no part of this publication may be reproduced or utilized otherwise in any form or by any means, electronic or mechanical, including photocopying, or posting on the internet or an intranet, without prior written permission. Permission can be requested from either ISO at the address below or ISO's member body in the country of the requester.

ISO copyright office
CP 401 • Ch. de Blandonnet 8
CH-1214 Vernier, Geneva
Phone: +41 22 749 01 11
Email: copyright@iso.org
Website: www.iso.org

Published in Switzerland

© ISO 2020 – All rights reserved

Documents
Document Sharing Hub

Full document details: BS ISO 21573-2:2020

Contents

Page

Foreword ..... **v**

1 Scope **1**

2 Normative references **1**

3 Terms and definitions **1**

4 Test items of performances **2**

5 Overall parameters **2**
5.1 Operating mass 2
5.1.1 Measuring conditions 2
5.1.2 Measuring apparatus and accuracy requirement 2
5.1.3 Measuring procedure 2
5.2 Overall dimensions 4
5.2.1 Conditions for taking measurements 4
5.2.2 Measuring apparatus and accuracy requirement 4
5.2.3 Measuring procedure 4

6 Pumping performance **10**
6.1 Piston pump 10
6.1.1 Pumping output 10
6.1.2 Concrete delivery pressure 15
6.2 Rotary pump 16
6.2.1 Single-roller rotary pump (see A.1) 16
6.2.2 Double-roller rotary pump (see A.2) 19

7 Feeding height of hopper **21**
7.1 Measuring conditions 21
7.2 Measurement equipment and accuracy requirement 22
7.3 Measuring procedure 22

8 Performance of water pump **22**
8.1 Measuring conditions 22
8.2 Measurement equipment and accuracy requirement 23
8.3 Measuring procedure 23
8.3.1 Relief pressure of water system 23
8.3.2 Water output without load 23

9 Performance of concrete-placing boom **23**
9.1 Measuring conditions 23
9.2 Measurement equipment and accuracy requirement 23
9.3 Measuring procedure 24
9.3.1 Maximum length of the concrete-placing boom 24
9.3.2 Maximum height of the concrete-placing boom 25
9.3.3 Concrete-placing boom section folding angle 25
9.3.4 Length of concrete-placing boom section 25
9.3.5 Concrete-placing boom operation zone 26
9.3.6 Minimum unfolding/folding time and average speed of concrete-placing boom section 26
9.3.7 Maximum slewing speed 27
9.3.8 Maximum slewing angle 28
9.3.9 Concrete-placing boom system pressure 29

10 Performance of outriggers **31**
10.1 Span of outrigger 31
10.1.1 Measuring conditions 31
10.1.2 Measurement equipment and accuracy requirement 31
10.1.3 Measuring procedure 31
10.2 Maximum load on each outrigger 32

© ISO 2020 – All rights reserved

AVA Documents
Document Sharing Hub
Full document details: BS ISO 21573-2:2020

10.2.1 Measuring conditions ... 33
10.2.2 Measuring apparatus and accuracy requirement ... 33
10.2.3 Measuring procedure ... 33
10.3 Speed of outriggers movement ... 34
10.3.1 Measuring conditions ... 34
10.3.2 Measuring apparatus and accuracy requirement ... 34
10.3.3 Measuring procedure ... 34
10.4 Outriggers system pressure ... 37
10.4.1 Measuring conditions ... 37
10.4.2 Measuring apparatus and accuracy requirement ... 37
10.4.3 Measuring procedure ... 37

Annex A (informative) **Theoretic pumping output and delivery pressure of rotary pump** ... **39**

© ISO 2020 – All rights reserved

Documents
Document Sharing Hub
Full document details: BS ISO 21573-2:2020

Foreword

ISO (the International Organization for Standardization) is a worldwide federation of national standards bodies (ISO member bodies). The work of preparing International Standards is normally carried out through ISO technical committees. Each member body interested in a subject for which a technical committee has been established has the right to be represented on that committee. International organizations, governmental and non-governmental, in liaison with ISO, also take part in the work. ISO collaborates closely with the International Electrotechnical Commission (IEC) on all matters of electrotechnical standardization.

The procedures used to develop this document and those intended for its further maintenance are described in the ISO/IEC Directives, Part 1. In particular, the different approval criteria needed for the different types of ISO documents should be noted. This document was drafted in accordance with the editorial rules of the ISO/IEC Directives, Part 2 (see www.iso.org/directives).

Attention is drawn to the possibility that some of the elements of this document may be the subject of patent rights. ISO shall not be held responsible for identifying any or all such patent rights. Details of any patent rights identified during the development of the document will be in the Introduction and/or on the ISO list of patent declarations received (see www.iso.org/patents).

Any trade name used in this document is information given for the convenience of users and does not constitute an endorsement.

For an explanation of the voluntary nature of standards, the meaning of ISO specific terms and expressions related to conformity assessment, as well as information about ISO's adherence to the World Trade Organization (WTO) principles in the Technical Barriers to Trade (TBT), see www.iso.org/iso/foreword.html.

This document was prepared by Technical Committee ISO/TC 195, *Building construction machinery and equipment*, Subcommittee SC 1, *Machinery and equipment for concrete work*.

This second edition cancels and replaces the first edition (ISO 21573-2:2008), which has been technically revised.

The main changes compared to the previous edition are as follows:

— added the actual pumping output and efficiency measurement under defined working conditions (e.g. concrete grade and pumping speed) in order to describe the actual pumping performance;

— added the following characteristic parameters measuring methods:

  — operating mass;

  — overall dimensions including length (L), width (W) and height (H);

  — delivery pressure of pump for driving the distributing and outriggers;

  — maximum load on each outrigger;

  — outrigger speed;

— complemented performance measuring methods and indicated conditions in the following clauses/subclauses:

  — concrete delivery pressure;

  — feeding height of hopper;

  — length, height and angle of the boom;

  — speed of the concrete-placing boom;

© ISO 2020 – All rights reserved

Documents
Document Sharing Hub
Full document details: BS ISO 21573-2:2020

— slewing speed;

— slewing angle;

— span of outrigger.

A list of all parts in the ISO 21573 series can be found on the ISO website.

Any feedback or questions on this document should be directed to the user's national standards body. A complete listing of these bodies can be found at www.iso.org/members.html.

© ISO 2020 – All rights reserved
Documents
Document Sharing Hub
Full document details: BS ISO 21573-2:2020

Building construction machinery and equipment — Concrete pumps —

Part 2: Procedure for examination of technical parameters

1 Scope

This document specifies the procedure and requirements for examining the technical commercial specifications of factory new piston-type concrete pump and rotary-type concrete pump as defined in ISO 21573-1.

It applies to mobile concrete pumps (with or without concrete-placing boom) and stationary concrete pumps.

2 Normative references

The following documents are referred to in the text in such a way that some or all of their content constitutes requirements of this document. For dated references, only the edition cited applies. For undated references, the latest edition of the referenced document (including any amendments) applies.

ISO 21573-1, *Building construction machinery and equipment — Concrete pumps — Part 1: Terminology and commercial specifications*

3 Terms and definitions

For the purposes of this document, the terms and definitions given in ISO 21573-1 and the following apply.

ISO and IEC maintain terminological databases for use in standardization at the following addresses:

— ISO Online browsing platform: available at https://www.iso.org/obp

— IEC Electropedia: available at http://www.electropedia.org/

3.1
single-roller rotary pump
rotary-type concrete pump that discharges fresh concrete by squeezing an elastic tube by one rotating roller

3.2
double-roller rotary pump
rotary-type concrete pump that discharges fresh concrete by squeezing an elastic tube between double rotating rollers

3.3
concrete storage, mixing and feeding device
device for agitating and discharging concrete or mortar

3.4
outrigger span
actual distance between adjacent centrelines of vertical cylinders with outriggers fully extended or projection distance of the actual distance on the reference plane

© ISO 2020 – All rights reserved

Documents
Document Sharing Hub
Full document details: BS ISO 21573-2:2020

4 Test items of performances

The following performances are measured or tested in this examination:

a) overall parameters;

b) pumping performance;

c) feeding height of hopper;

d) performance of the water pump;

e) performance of the concrete-placing boom;

f) performance of the outrigger.

5 Overall parameters

5.1 Operating mass

5.1.1 Measuring conditions

Measure the mass of the concrete pump under the following conditions:

— with the pump fully operational and all systems functional;

— including all standard equipment following the manufacturer's specifications;

— with a driver of mass 75 kg;

— with the fuel tank full;

— with cleaning water, cooling, lubrication and hydraulic systems full;

— with the vehicle parked steadily, the engine switched off, the gearbox shifted to neutral gear, and the brake released.

— with the weighing of the machine which should be done with the brakes of the truck released, for safety reasons, apply wheel stoppers on 2 wheels at least.

5.1.2 Measuring apparatus and accuracy requirement

Truck scale should be used as the measuring apparatus with an accuracy of 0,5 %.

5.1.3 Measuring procedure

5.1.3.1 Measuring method

The weighing platform of the scale shall be big enough to accommodate all points of support of the machinery at one time.

The entry ground of the weighing platform shall be kept at the same level with the weighing platform.

Measure the operating mass as shown in Figure 1.

a) Drive the concrete pump at low speed from one direction into the weighing platform, stop it steadily, and measure the mass $G_0^{'}$ of the concrete pump.

b) Make a turnaround, drive it onto the weighing platform from the opposite direction, stop it steadily, and measure the mass $G_0^{''}$ of the concrete pump again.

© ISO 2020 – All rights reserved
Documents
Document Sharing Hub
Full document details: BS ISO 21573-2:2020

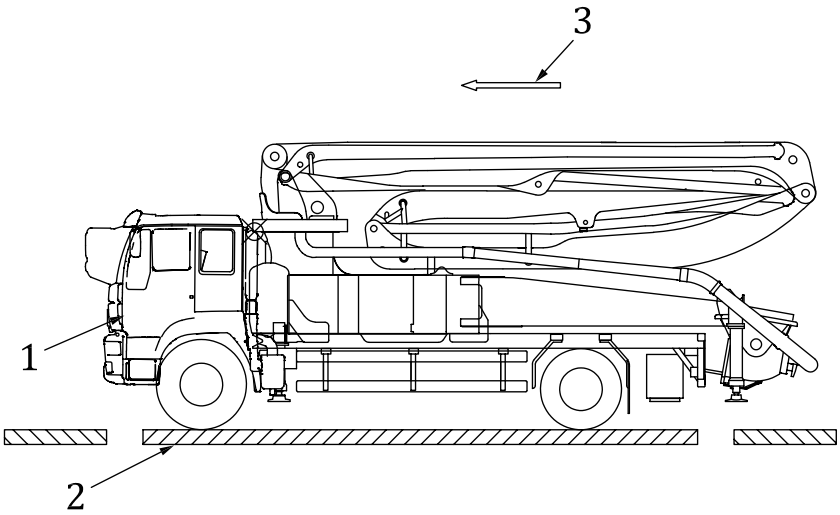

a) The first mass measurement

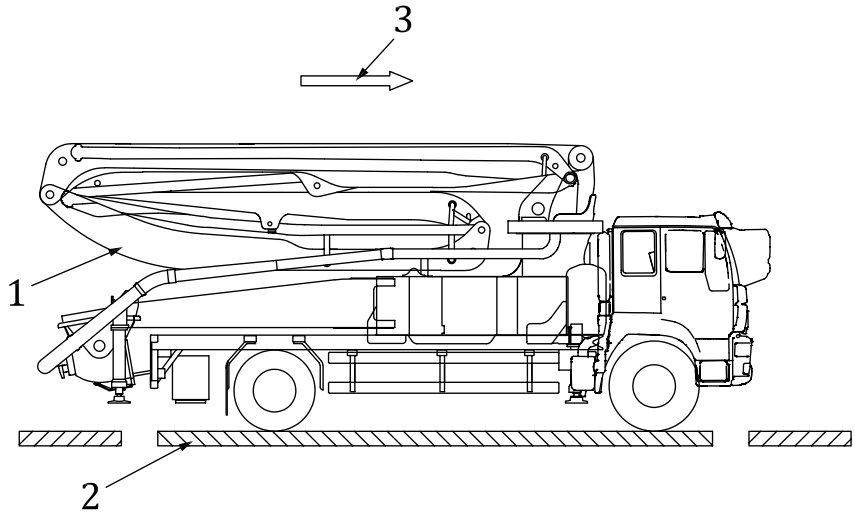

b) The second mass measurement

Key

1 concrete pump

2 weighing platform

3 driving direction

Figure 1 — Diagram for mass measuring of concrete pump

5.1.3.2 Calculation method

Calculate the mass of the concrete pump using Formula (1):

$$G_0 = \frac{G'_0 + G''_0}{2} - (G_1 - 75) \tag{1}$$

where

© ISO 2020 – All rights reserved

Documents
Document Sharing Hub
Full document details: BS ISO 21573-2:2020

G_0 is the mass of the concrete pump (kg);

$G_0^{'}, G_0^{''}$ is the mass of the concrete pump measured by driving it onto the weighing platform from two directions respectively (kg);

G_1 is the actual driver weight (kg).

Record the measurement results in Table 1.

Table 1 — Measurement record — Mass of the concrete pump

Date of measuring			Place		
Model of concrete pump			Serial number		
Apparatus	Truck scale				Remarks
Characteristics	Parameter	Measured data	Parameter	Calculated value	
Operating mass	$G_0^{'}$		G_0		
	$G_0^{''}$				
	G_1				

5.2 Overall dimensions

5.2.1 Conditions for taking measurements

Measure the overall dimensions of the concrete pump under the following conditions:

— on the rigid and horizontal ground;

— under non-working state (with the concrete-placing boom folded and the outriggers retracted);

— with the wheels straight forward;

— with the tire pressure required;

— with the doors of the driver cab and hood, base-frame panels and hopper cover closed;

— with the radio antenna retracted;

— not including the license plate, but including the bracket of the license plate.

5.2.2 Measuring apparatus and accuracy requirement

Use a tape measure or comparable apparatus with an accuracy of ±1 mm.

5.2.3 Measuring procedure

5.2.3.1 General

The measurement shall be taken between impenetrable, horizontal or vertical, theoretical planes. Measure the overall length, overall width, overall height and wheelbase of several typical types of the concrete pump as shown in Figure 3, Figure 4 and Figure 5. Record the measured values in Table 2, Table 3 and Table 4.

a) Place the machine on a horizontal area. The machine shall be put into the transport or travel mode as specified by the manufacturer.

© ISO 2020 – All rights reserved
Documents
Document Sharing Hub
Full document details: BS ISO 21573-2:2020

b) The machine shall be placed between two virtual impenetrable planes. Move the virtual planes as close together as possible without penetrating them. No elements of the machine other than the specified exemptions are allowed to penetrate the virtual plane. The planes are defined in Figure 2.

c) The measurement taken is the distance between the two parallel planes.

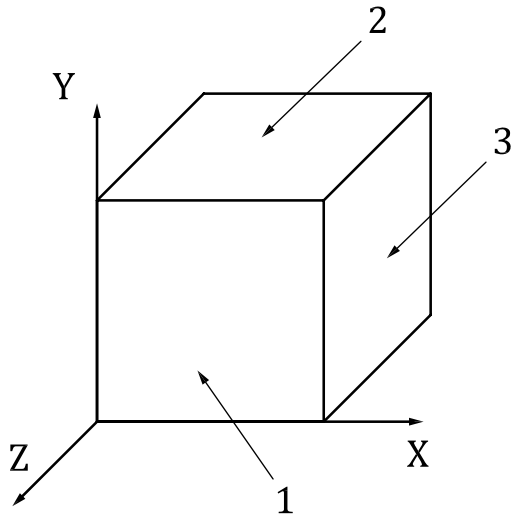

Figure 2 — Planes definition

Key

X X-axi
Z Z-axis
Y Y-axis
1 XY plane
2 parallel to XZ plane
3 parallel to YZ plane

5.2.3.2 Overall length

a) Determine the closest XY plane to the front and rear of the machine.

b) The measurement taken is the distance between the two parallel planes.

c) Record the value as the overall length L (mm) of the machine.

5.2.3.3 Overall width

a) Determine the closest YZ plane to the left and right of the machine, excluding the following protrusion parts: the rear-view mirrors, side indicator light and flexible mudguards.

b) The measurement taken is the distance between the two parallel planes.

c) Record the value as the overall width W (mm) of the machine.

5.2.3.4 Overall height

a) Determine the closest XZ plane to the top of the machine and ground.

b) The measurement taken is the distance between the two parallel planes.

© ISO 2020 – All rights reserved

Documents
Document Sharing Hub
Full document details: BS ISO 21573-2:2020

c) Record the value as the overall height H (mm) of the machine.

5.2.3.5 Wheelbase

a) Determine the XY plane passing through the centrelines of two adjacent axles. Measure the distance between two planes.

For XY plane passing through the centrelines, place marks on the ground for convenience of measuring.

b) Record the values as individual wheelbase L_1, L_2, L_3, L_4, L_5 (mm) of the machine.

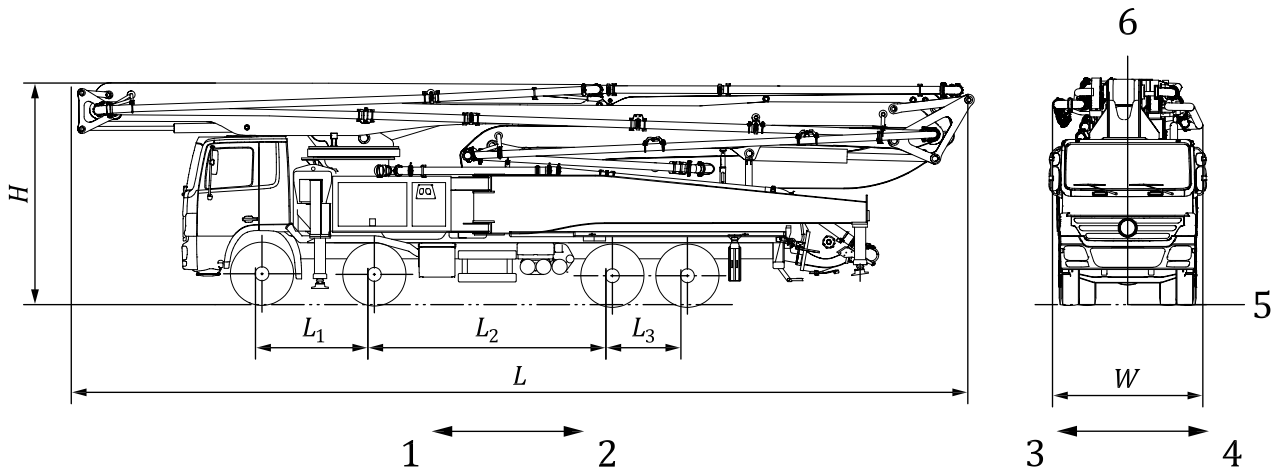

a) 4-axis chassis

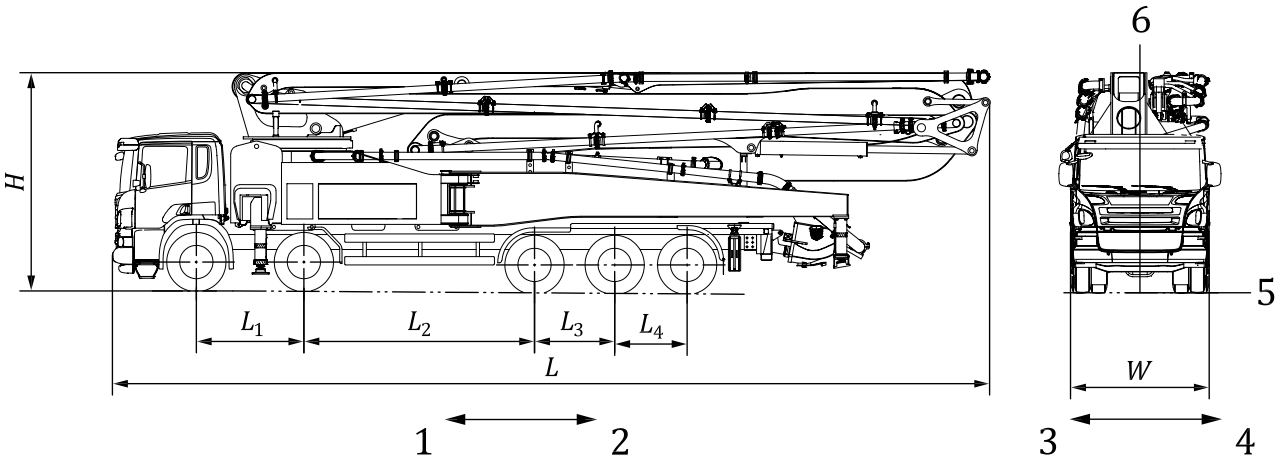

b) 5-axis chassis

© ISO 2020 – All rights reserved
Documents
Document Sharing Hub
Full document details: BS ISO 21573-2:2020

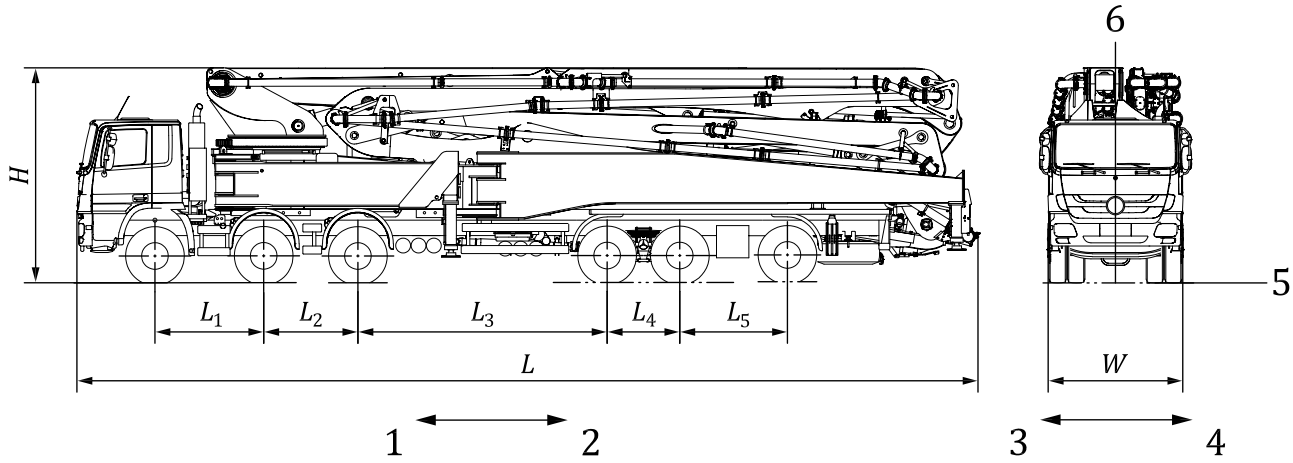

c) 6-axis chassis

Key

L	overall length of machine	1	front
W	overall width of machine	2	rear
H	overall height of machine	3	right
L_1	wheelbase between 1st and 2nd axles	4	left
L_2	wheelbase between 2nd and 3rd axle	5	plane XZ
L_3	wheelbase between 3rd and 4th axles	6	plane YZ
L_4	wheelbase between 4th and 5th axles		
L_5	wheelbase between 5th and 6th axles		

Figure 3 — Overall dimensions of the truck mounted concrete pump with concrete-placing boom

© ISO 2020 – All rights reserved

Documents
Document Sharing Hub
Full document details: BS ISO 21573-2:2020

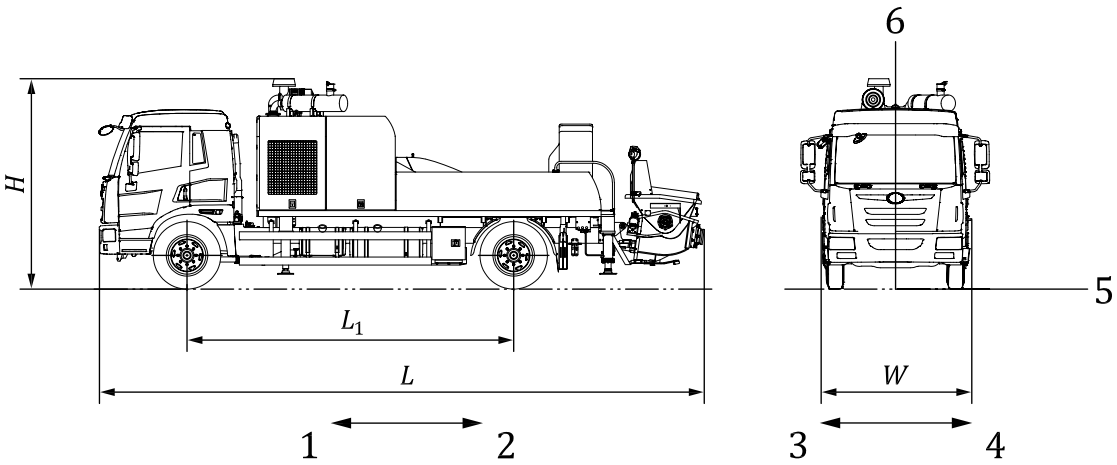

Key

L	overall length of machine
W	overall width of machine
H	overall height of machine
L_1	wheelbase between 1st and 2nd axles
1	front
2	rear
3	right
4	left
5	plane XZ
6	plane YZ

Figure 4 — Overall dimensions of the truck-mounted concrete pump for connection of a conveying pipeline

© ISO 2020 – All rights reserved
Documents
Document Sharing Hub
Full document details: BS ISO 21573-2:2020

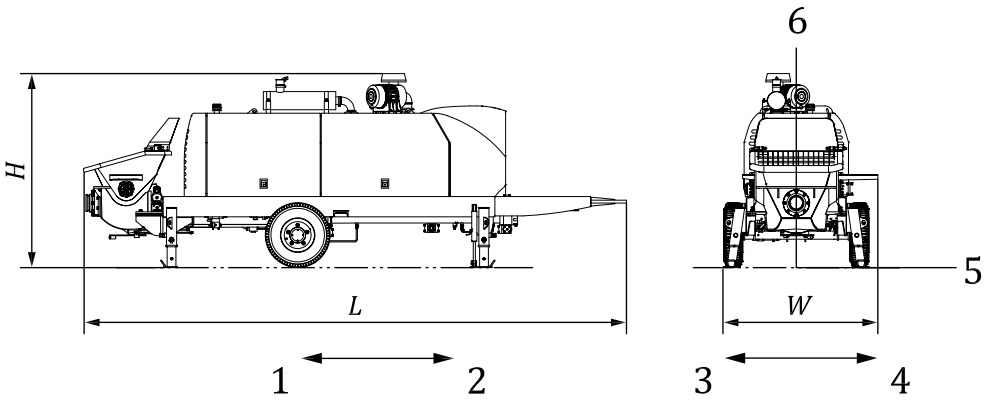

Key

L overall length of machine
W overall width of machine
H overall height of machine
1 front
2 rear
3 right
4 left
5 plane XZ
6 plane YZ

Figure 5 — Overall dimensions of the trailer-type concrete pump

Table 2 — Measurement record — Overall dimensions of the truck mounted concrete pump

Date of measuring		Place	
Model of concrete pump		Serial number	

Characteristics		Measured data	Unit	Remarks
Overall dimensions	Overall length, *L*		mm	
	Overall width, *W*		mm	
	Overall height, *H*		mm	
	L_1 - Wheelbase between 1st and 2nd axles		mm	
	L_2 – Wheelbase between 2nd and 3rd axles		mm	
	L_3 – Wheelbase between 3rd and 4th axles		mm	
	L_4 – Wheelbase between 4th and 5th axles		mm	
	L_5 – Wheelbase between 5th and 6th axles		mm	

Table 3 — Measurement record — Overall dimensions of the truck-mounted concrete pump for connection of a conveying pipeline

Date of measuring		Place	
Model of concrete pump		Serial number	

© ISO 2020 – All rights reserved

Documents
Document Sharing Hub
Full document details: BS ISO 21573-2:2020