BS ISO 21806-9:2020

BSI Standards Publication

Road vehicles — Media Oriented Systems Transport (MOST)

Part 9: 150-Mbit/s optical physical layer conformance test plan

Documents
Document Sharing Hub

Full document details: BS ISO 21806-9:2020

National foreword

This British Standard is the UK implementation of ISO 21806-9:2020.

The UK participation in its preparation was entrusted to Technical Committee AUE/16, Data Communication (Road Vehicles).

A list of organizations represented on this committee can be obtained on request to its committee manager.

This publication does not purport to include all the necessary provisions of a contract. Users are responsible for its correct application.

© The British Standards Institution 2020
Published by BSI Standards Limited 2020

ISBN 978 0 539 03049 5

ICS 43.040.15

Compliance with a British Standard cannot confer immunity from legal obligations.

This British Standard was published under the authority of the Standards Policy and Strategy Committee on 31 October 2020.

Amendments/corrigenda issued since publication

Date	Text affected

Documents
Document Sharing Hub

Full document details: BS ISO 21806-9:2020

INTERNATIONAL STANDARD

ISO 21806-9

First edition
2020-10

Road vehicles — Media Oriented Systems Transport (MOST) —

Part 9: 150-Mbit/s optical physical layer conformance test plan

Véhicules routiers — Système de transport axé sur les médias —

Partie 9: Plan d'essais de conformité de la couche optique physique à 150-Mbit/s

Reference number
ISO 21806-9:2020(E)

Documents
Document Sharing Hub

© ISO 2020

Full document details: BS ISO 21806-9:2020

COPYRIGHT PROTECTED DOCUMENT

© ISO 2020

All rights reserved. Unless otherwise specified, or required in the context of its implementation, no part of this publication may be reproduced or utilized otherwise in any form or by any means, electronic or mechanical, including photocopying, or posting on the internet or an intranet, without prior written permission. Permission can be requested from either ISO at the address below or ISO's member body in the country of the requester.

ISO copyright office
CP 401 • Ch. de Blandonnet 8
CH-1214 Vernier, Geneva
Phone: +41 22 749 01 11
Email: copyright@iso.org
Website: www.iso.org

Published in Switzerland

© ISO 2020 – All rights reserved

Documents
Document Sharing Hub

Full document details: BS ISO 21806-9:2020

Contents

Page

Foreword ..... **v**

Introduction ..... **vi**

1 Scope **1**

2 Normative references **1**

3 Terms and definitions **1**

4 Symbols and abbreviated terms **2**
4.1 Symbols 2
4.2 Abbreviated terms 2

5 Conventions **3**

6 Operating conditions and measurement tools, requested accuracy **3**
6.1 Operating conditions 3
6.2 Apparatus — Measurement tools, requested accuracy 3

7 Electrical characteristics **5**
7.1 Test according to LVDS 5
7.2 Test according to LVTTL 5

8 Optical characteristics **5**
8.1 Measurement of optical output power at SP2 5
8.2 Measurement of optical input power at SP3 6
8.3 Measurement of pigtail fibre attenuation 7
8.3.1 General 7
8.3.2 Practical considerations 9
8.4 Spectral parameters at SP2 11
8.5 $\boldsymbol{b}_0/\boldsymbol{b}_1$ detection at SP2 11
8.6 Extinction ratio at SP2 13
8.7 Optical overshoot and undershoot at SP2 13
8.7.1 General 13
8.7.2 Overshoot measurement example 14
8.7.3 Undershoot (2 UI) measurement example 16
8.7.4 Undershoot (4UI) measurement example 16
8.8 Transition times at SP2 17
8.9 Stimulus creation for SP3 18

9 Measurement of phase variation **19**
9.1 General 19
9.2 Measuring alignment jitter 21
9.3 Measuring transferred jitter 23
9.4 Test set-ups 25
9.4.1 Relevant eye mask for MOST components 25
9.4.2 SP4 Jitter measurement (AJ and TJ) 26
9.4.3 SP2 jitter measurement (AJ and TJ) 27
9.5 Crosstalk 28
9.5.1 General 28
9.5.2 Measurement set-up 28
9.5.3 Procedure 29

10 Power-on and power-off **29**
10.1 General 29
10.2 Measuring EOC parameters 30
10.2.1 Measuring EOC parameters — Test set-up 30
10.2.2 Measuring EOC parameters — Signal charts 31
10.2.3 Measuring EOC parameters — Test sequences 33
10.3 Measuring OEC parameters 37

AVA Documents
Document Sharing Hub

© ISO 2020 – All rights reserved

Full document details: BS ISO 21806-9:2020

10.3.1 Measuring OEC parameters — Test set-up 37
10.3.2 Measuring OEC parameters — Signal charts 38
10.3.3 Measuring OEC parameters — Test sequences 39

11 Detecting bit rate (frequency reference) 43

12 System performance 43
12.1 General 43
12.2 SP4 receiver tolerance 43
12.3 TimingMaster delay tolerance 44

13 Conformance tests of 150-Mbit/s optical physical layer 47
13.1 Location of interfaces 47
13.2 Control signals 48
13.3 Limited access to specification points 49
13.4 Parameter overview 49

14 Physical layer verification for MOST components, MOST modules, and MOST devices 51
14.1 FOT 51
14.2 Pigtail 52
14.3 MOST device 52
14.4 Development tool 52

15 Full physical layer conformance 52
15.1 Overview 52
15.2 Consideration of FOT 52
15.3 Consideration of pigtail 52
15.4 Consideration of connector interfaces 52
15.5 Generating test signals for the IUT 53
15.5.1 General information 53
15.5.2 Test set-up for jitter measurement 53

16 Limited physical layer conformance 53
16.1 Overview 53
16.2 Generating test signals for the IUT input section SP3 55
16.3 Analysis of test results 56
16.4 Test flow overview 56
16.5 Measurement of SP3 input signal of the IUT 57
16.6 Measurement of SP2 output signal of the IUT 58
16.7 Functional testing of wake-up and shutdown 58

17 Direct physical measuring accuracy 59

18 General remarks 61
18.1 Definition of family 61
18.2 Supplier guideline for product changes 61
18.3 Dependency of the network frame rate 62

Annex A (informative) **Measuring optical signals at SP2 using averaging 63**

Annex B (normative) **SNR requirements for test equipment 64**

Annex C (informative) **Limited physical layer conformance for development tools 67**

Bibliography 68

© ISO 2020 – All rights reserved

Documents
Document Sharing Hub
Full document details: BS ISO 21806-9:2020

Foreword

ISO (the International Organization for Standardization) is a worldwide federation of national standards bodies (ISO member bodies). The work of preparing International Standards is normally carried out through ISO technical committees. Each member body interested in a subject for which a technical committee has been established has the right to be represented on that committee. International organizations, governmental and non-governmental, in liaison with ISO, also take part in the work. ISO collaborates closely with the International Electrotechnical Commission (IEC) on all matters of electrotechnical standardization.

The procedures used to develop this document and those intended for its further maintenance are described in the ISO/IEC Directives, Part 1. In particular, the different approval criteria needed for the different types of ISO documents should be noted. This document was drafted in accordance with the editorial rules of the ISO/IEC Directives, Part 2 (see www.iso.org/directives).

Attention is drawn to the possibility that some of the elements of this document may be the subject of patent rights. ISO shall not be held responsible for identifying any or all such patent rights. Details of any patent rights identified during the development of the document will be in the Introduction and/or on the ISO list of patent declarations received (see www.iso.org/patents).

Any trade name used in this document is information given for the convenience of users and does not constitute an endorsement.

For an explanation of the voluntary nature of standards, the meaning of ISO specific terms and expressions related to conformity assessment, as well as information about ISO's adherence to the World Trade Organization (WTO) principles in the Technical Barriers to Trade (TBT), see www.iso.org/iso/foreword.html.

This document was prepared by Technical Committee ISO/TC 22, *Road vehicles*, Subcommittee SC 31, *Data communication*.

A list of all parts in the ISO 21806 series can be found on the ISO website.

Any feedback or questions on this document should be directed to the user's national standards body. A complete listing of these bodies can be found at www.iso.org/members.html.

© ISO 2020 – All rights reserved

Documents
Document Sharing Hub
Full document details: BS ISO 21806-9:2020

Introduction

The Media Oriented Systems Transport (MOST) communication technology was initially developed at the end of the 1990s in order to support complex audio applications in cars. The MOST Cooperation was founded in 1998 with the goal to develop and enable the technology for the automotive industry. Today, MOST[1)] enables the transport of high quality of service (QoS) audio and video together with packet data and real-time control to support modern automotive multimedia and similar applications. MOST is a function-oriented communication technology to network a variety of multimedia devices comprising one or more MOST nodes.

Figure 1 shows a MOST network example.

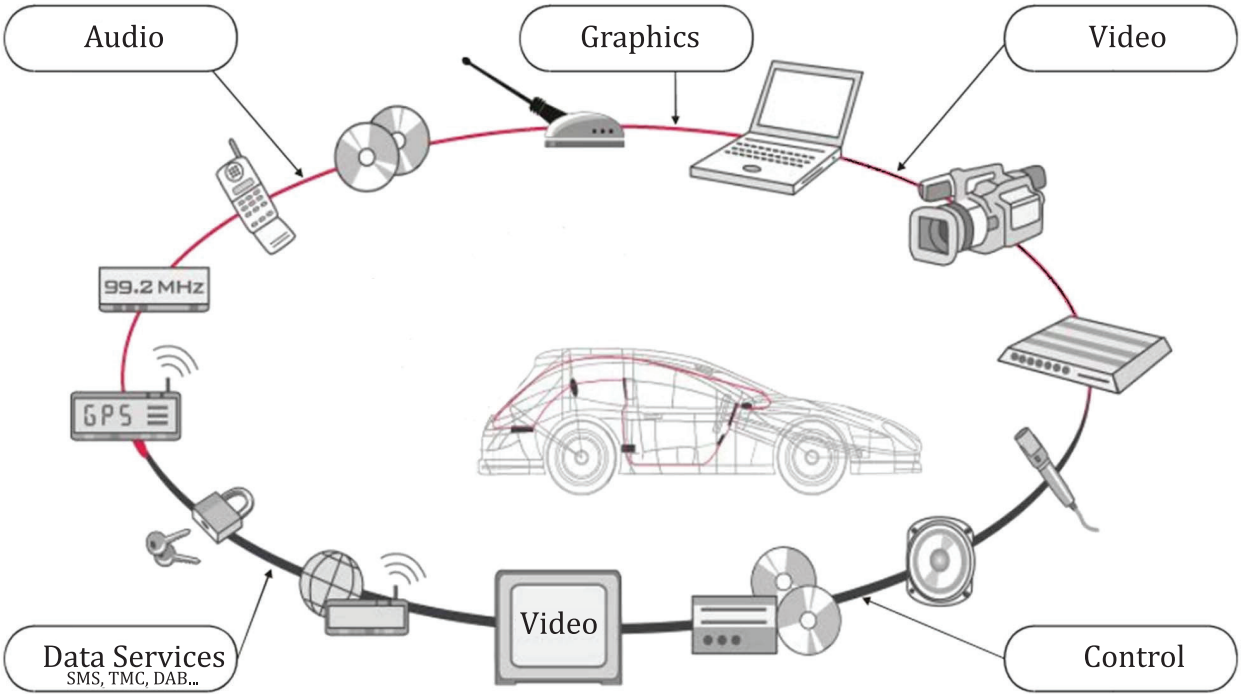

Figure 1 — MOST network example

The MOST communication technology provides

— synchronous and isochronous streaming,

— small overhead for administrative communication control,

— a functional and hierarchical system model,

— API standardization through a function block (FBlock) framework,

— free partitioning of functionality to real devices,

— service discovery and notification, and

— flexibly scalable automotive-ready Ethernet communication according to ISO/IEC/IEEE 8802-3[3].

MOST is a synchronous time-division-multiplexing (TDM) network that transports different data types on separate channels at low latency. MOST supports different bit rates and physical layers. The network clock is provided with a continuous data signal.

1) MOST® is the registered trademark of Microchip Technology Inc. This information is given for the convenience of users of this document and does not constitute an endorsement by ISO.

© ISO 2020 – All rights reserved
Documents
Document Sharing Hub
Full document details: BS ISO 21806-9:2020

Within the synchronous base data signal, the content of multiple streaming connections and control data is transported. For streaming data connections, bandwidth is reserved to avoid interruptions, collisions, or delays in the transport of the data stream.

MOST specifies mechanisms for sending anisochronous, packet-based data in addition to control data and streaming data. The transmission of packet-based data is separated from the transmission of control data and streaming data. None of them interfere with each other.

A MOST network consists of devices that are connected to one common control channel and packet channel.

In summary, MOST is a network that has mechanisms to transport the various signals and data streams that occur in multimedia and infotainment systems.

The ISO standards maintenance portal (https://standards.iso.org/iso/) provides references to MOST specifications implemented in today's road vehicles because easy access via hyperlinks to these specifications is necessary. It references documents that are normative or informative for the MOST versions 4V0, 3V1, 3V0, and 2V5.

The ISO 21806 series has been established in order to specify requirements and recommendations for implementing the MOST communication technology into multimedia devices and to provide conformance test plans for implementing related test tools and test procedures.

To achieve this, the ISO 21806 series is based on the open systems interconnection (OSI) basic reference model in accordance with ISO/IEC 7498-1[1] and ISO/IEC 10731[2], which structures communication systems into seven layers as shown in Figure 2. Stream transmission applications use a direct stream data interface (transparent) to the data link layer.

© ISO 2020 – All rights reserved

Documents
Document Sharing Hub
Full document details: BS ISO 21806-9:2020

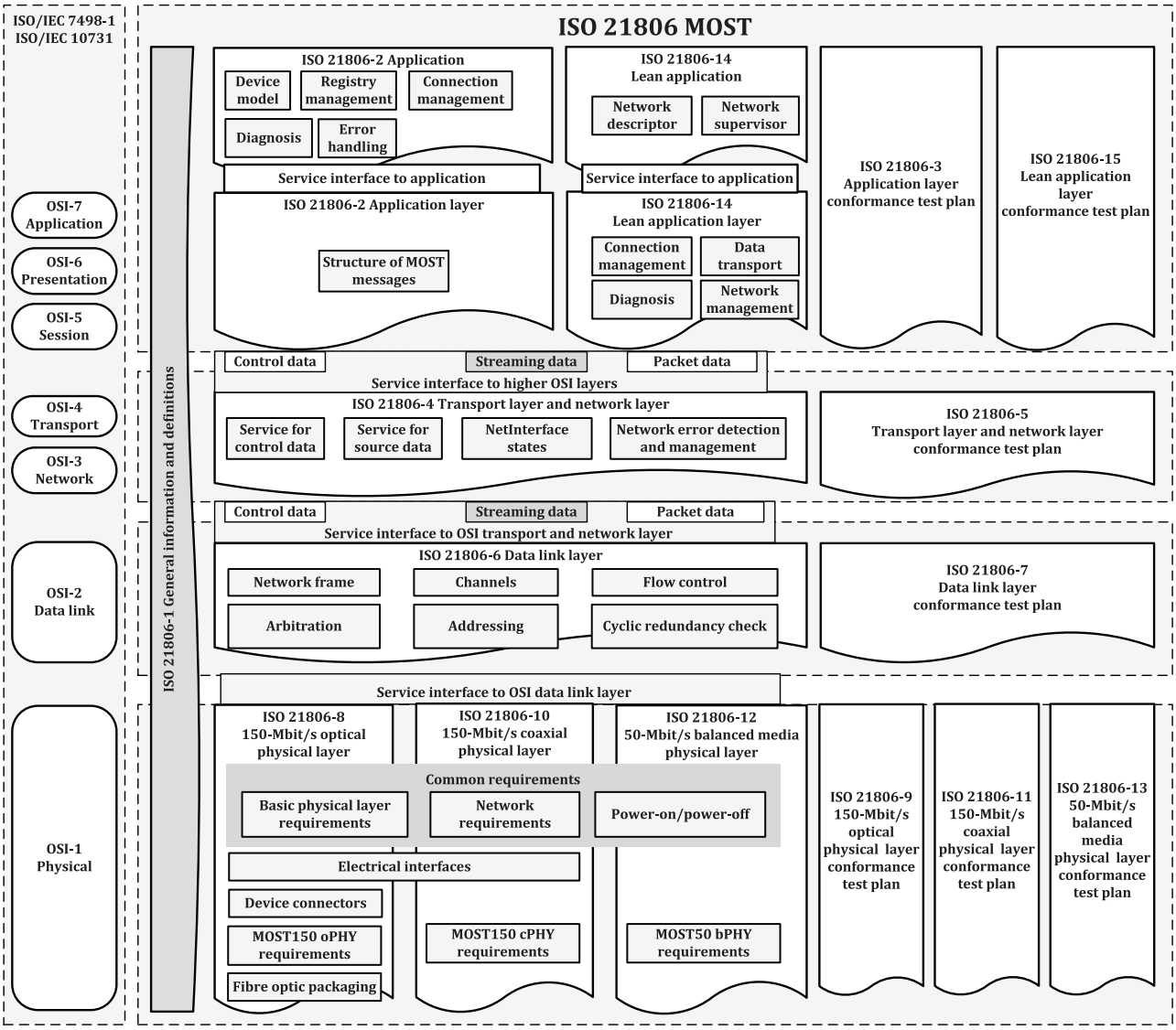

Figure 2 — The ISO 21806 series reference according to the OSI model

The International Organization for Standardization (ISO) draws attention to the fact that it is claimed that compliance with this document may involve the use of a patent.

ISO takes no position concerning the evidence, validity and scope of this patent right.

The holder of this patent right has assured ISO that he/she is willing to negotiate licences under reasonable and non-discriminatory terms and conditions with applicants throughout the world. In this respect, the statement of the holder of this patent right is registered with ISO. Information may be obtained from the patent database available at www.iso.org/patents.

Attention is drawn to the possibility that some of the elements of this document may be the subject of patent rights other than those in the patent database. ISO shall not be held responsible for identifying any or all such patent rights.

© ISO 2020 – All rights reserved
Documents
Document Sharing Hub
Full document details: BS ISO 21806-9:2020

Road vehicles — Media Oriented Systems Transport (MOST) —

Part 9: 150-Mbit/s optical physical layer conformance test plan

1 Scope

This document specifies the conformance test plan for the 150-Mbit/s optical physical layer for MOST (MOST150 oPHY), a synchronous time-division-multiplexing network.

This document specifies the basic conformance test measurement methods, relevant for verifying compatibility of networks, nodes, and MOST components with the requirements specified in ISO 21806-8.

2 Normative references

The following documents are referred to in the text in such a way that some or all of their content constitutes requirements of this document. For dated references, only the edition cited applies. For undated references, the latest edition of the referenced document (including any amendments) applies.

ISO 21806-1, *Road vehicles — Media Oriented Systems Transport (MOST) — Part 1: General information and definitions*

ISO 21806-8:2020, *Road vehicles — Media Oriented Systems Transport (MOST) — Part 8: 150-Mbit/s optical physical layer*

IEC 60793-1-40, *Optical fibres — Part 1-40: Measurement methods and test procedures — Attenuation*

IEC 61280-1-3, *Fibre optic communication subsystem test procedures — Part 1-3: General communication subsystems — Central wavelength and spectral width measurement, Method B*

IEC 61280-2-2, *Fibre optic communication subsystem test procedures — Part 2-2: Digital systems — Optical eye pattern, waveform and extinction ratio measurement*

IEC 61300-3-4, *Fibre optic interconnecting devices and passive components — Basic test and measurement procedures — Part 3-4: Examinations and measurements — Attenuation*

JEDEC No. JESD8C.01[2)], *Interface Standard for Nominal 3 V/3.3 V Supply Digital Integrated Circuits*

TIA/EIA-644-A[3)], *Electrical Characteristics of Low-Voltage Differential Signaling (LVDS) Interface Circuits*

3 Terms and definitions

For the purposes of this document, the terms and definitions given in ISO 21806-1, ISO 21806-8, and the following apply.

ISO and IEC maintain terminological databases for use in standardization at the following addresses:

— ISO Online browsing platform: available at https://www.iso.org/obp

2) Available at https://www.jedec.org/.

3) Available at https://www.tiaonline.org/standards/.

© ISO 2020 – All rights reserved

Documents
Document Sharing Hub
Full document details: BS ISO 21806-9:2020

— IEC Electropedia: available at http://www.electropedia.org/

3.1
intersymbol interference
disturbance due to the overflowing into the signal element representing a wanted digit of signal elements representing preceding or following digits

[SOURCE: IEC Electropedia 702-08-33]

4 Symbols and abbreviated terms

4.1 Symbols

---	empty cell/undefined
t_{OSLE}	time of optical signal level detection end
t_{OSLS}	time of optical signal level detection start
ρ_{Fs}	frame rate
ρ_{BR}	bit rate

4.2 Abbreviated terms

For the purposes of this document, the abbreviated terms given in ISO 21806-1, ISO 21806-8, and the following apply.

AC	alternate current
AJ	alignment jitter
AWG	arbitrary waveform generator
BW	bandwidth
DC	direct current
DCD	duty cycle distortion
DSO	digital sampling oscilloscope
IUT	implementation under test
EMD	equilibrium mode power distribution
EOC	electrical optical converter
FOT	fibre optic transceiver
MNC	MOST network controller
NA	numerical aperture
OEC	optical electrical converter
PG	pattern generator
PHYSTT	physical layer stress test tool

© ISO 2020 – All rights reserved
Documents
Document Sharing Hub
Full document details: BS ISO 21806-9:2020

PLL	phase lock loop
POF	plastic optical fibre
RMS	root mean square
SDA	serial data analyser
SMD	surface mount device
SNR	signal-to-noise ratio
SP	Specification Point
THM	through hole mount
TJ	transferred jitter
UI	unit interval
VCM	common mode voltage

5 Conventions

This document is based on OSI service conventions as specified in ISO/IEC 10731[2].

6 Operating conditions and measurement tools, requested accuracy

6.1 Operating conditions

Temperature range for MOST components: T_A = −40 °C to +95 °C according to ISO 21806-8:2020, 11.4.

Voltage range for MOST components: V_{CC} = 3,135 V to 3,465 V according to ISO 21806-8:2020, Clause 10.

NOTE There are functional requirements for the EOC within an extended voltage supply range according to ISO 21806-8.

6.2 Apparatus — Measurement tools, requested accuracy

The following list provides state-of-the-art tools.

6.2.1 Oscilloscope

— digital sampling oscilloscope;

— sampling rate ≥10 gigasample/s;

— bandwidth ≥1,5 GHz;

— sampling memory ≥10 megasample;

— active probe (single-ended, differential).

6.2.2 High-speed OEC

— bandwidth ≥250 MHz (DC-coupled) for b_0/b_1 measurement to calculate extinction ratio r_{e2};

— bandwidth ≥750 MHz (DC- or AC-coupled) for all other measurements;

© ISO 2020 – All rights reserved

Documents
Document Sharing Hub
Full document details: BS ISO 21806-9:2020

— performance recommendation:

  — response flatness: 1 dB (constant gain over bandwidth; linear transfer function over the optical input range);

  — low DC offset error (see 8.5).

6.2.3 High-speed EOC

— light source with a pulse shape representing a high-bandwidth emitter:

  — transition time t_r and t_f below 1 ns;

  — overshoot greater than 1,25 of normalized amplitude;

  — extinction ratio: 10 dB to 12 dB.

— light source with a pulse shape representing a low-bandwidth emitter:

  — transition time t_r and t_f between 1 ns and 0,5 UI;

  — overshoot: no overshoot;

  — extinction ratio: 10 dB to 12 dB.

6.2.4 Optical power meter

— accuracy: at least ±0,25 dB;

— accuracy optical power meter and SP2 adaptor: at least ±0,5 dB;

— wavelength: 650 nm;

— range: at least -60 dBm to 0 dBm;

— trigger input (for timing measurements).

6.2.5 Ampere meter

— accuracy ≤2 µA;

— trigger input (for timing measurements).

6.2.6 Pattern generator for generating MOST150 oPHY stress pattern

— bandwidth 300 Mbit/s;

— trigger output (for timing measurements).

6.2.7 Optical attenuator

— attenuation up to 40 dB;

— preferably attenuation via grey filter, not via air gap.

6.2.8 Optical Y–coupler.

6.2.9 Optical spectrometer

— resolution ≤1 nm;

© ISO 2020 – All rights reserved
Documents
Document Sharing Hub
Full document details: BS ISO 21806-9:2020

— spectral range at least 500 nm to 800 nm.

7 Electrical characteristics

7.1 Test according to LVDS

Testing of MOST devices or MOST components shall be performed according to the measurement methods and set-ups specified in TIA/EIA-644-A. Parameters and their respective limits are also derived from TIA/EIA-644-A, with the exception of common mode voltage (V_{CM}) as specified in ISO 21806-8:2020, 12.1.

7.2 Test according to LVTTL

Testing of MOST devices or MOST components shall be performed in accordance with JEDEC No. JESD8C.01.

8 Optical characteristics

8.1 Measurement of optical output power at SP2

Figure 3 shows the schematic of an optical power meter. This measurement adaptor allows the test of parameter P_{opt2} considering the power within a far field angle of 30° (NA = 0,5) and a diameter of 1,0 mm.

The optical power at SP2 is transferred by a glass fibre with a numerical aperture of greater than 0,5, a core diameter of 1 000 µm, and a typical length of 30 mm. An aperture between glass fibre and photo detector confines the transferred beam to the required numerical aperture of 0,5. The size of the aperture depends on the distance between glass fibre and the aperture (see Figure 4). The end face of the glass fibre shall be polished to avoid scattering and a conversion of the beam waist from SP2 to the end of the glass fibre. The glass fibre is mounted into a ferrule, which can be inserted into an SP2-contact of a MOST device for measuring the optical power at SP2 (MOST compatible ferrule, i.e. derived from connector drawing).

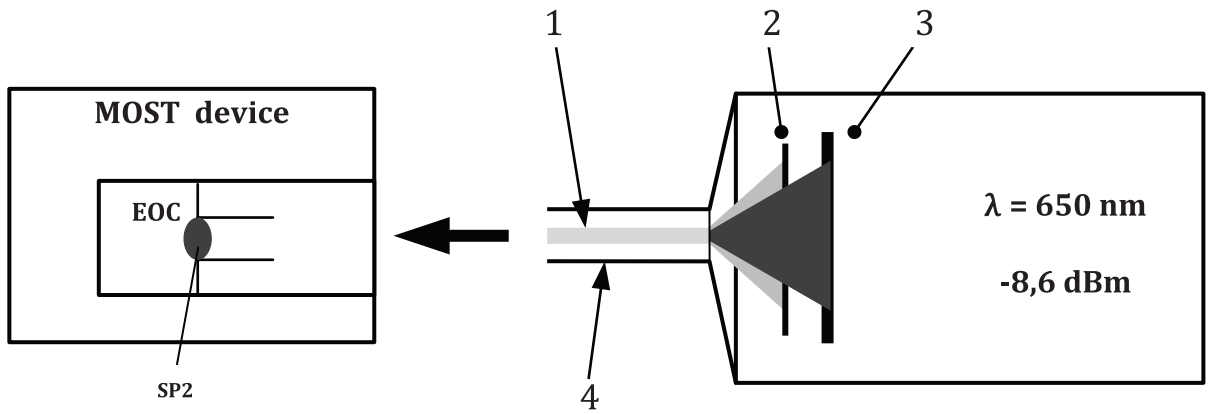

Key

1 glass fibre, D = 1 mm, NA ≥ 0,5

2 NA = 0,5

3 large area photo detector

4 MOST compatible ferrule

Figure 3 — Schematic of optical power meter

Figure 4 shows the calculation of aperture size d_B.

© ISO 2020 – All rights reserved

Documents
Document Sharing Hub
Full document details: BS ISO 21806-9:2020

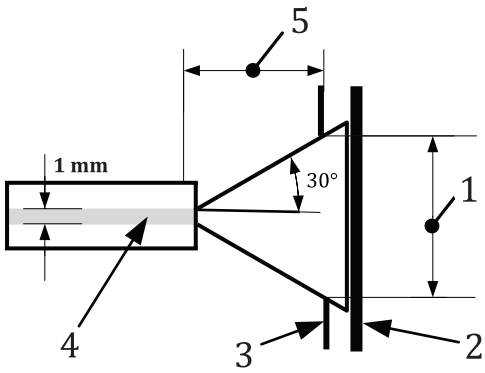

Key

1 aperture size d_B: see Formula (1)
2 photo detector
3 aperture
4 glass fibre
5 distance X between the glass fibre and the aperture

Figure 4 — Calculation of aperture size d_B

IMPORTANT — It should be ensured that the size of the photo detector is large enough to receive all the light after the aperture.

$$d_B = c + 2 \times X \times \tan(30°) \quad (1)$$

where

d_B is the aperture size;

X is the distance between the glass fibre and the aperture;

c is the diameter: 1 mm.

8.2 Measurement of optical input power at SP3

The optical power measurement set-up is given in Figure 5. This measurement allows the testing of the parameter P_{opt3} considering the power within a far field angle of 30° (NA = 0,5) and a diameter of 1,0 mm.

Figure 5 shows the optical power measurement set-up for SP3.

© ISO 2020 – All rights reserved
Documents
Document Sharing Hub
Full document details: BS ISO 21806-9:2020

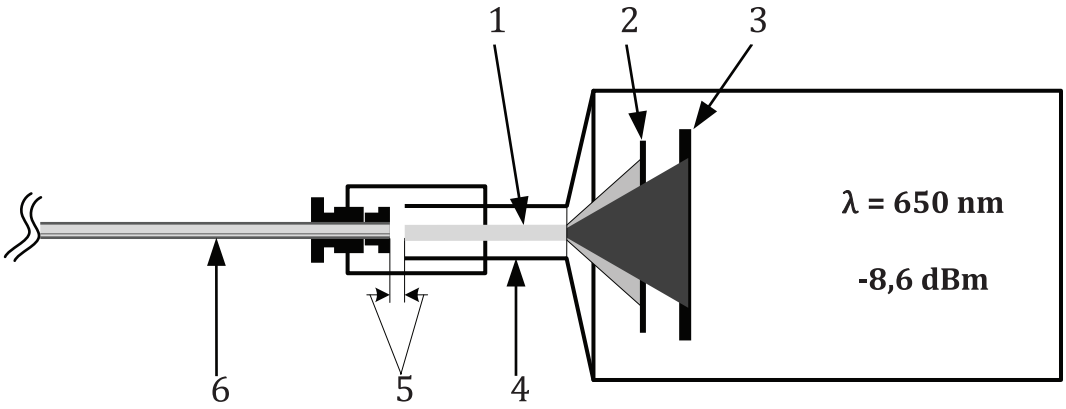

Key

1 glass fibre, D = 1 mm, NA ≥ 0,5

2 NA = 0,5

3 large area photo detector

4 MOST ferrule

5 50 µm to 100 µm; see connector interfaces in ISO 21806-8

6 1 mm POF cable harness

Figure 5 — Optical power measurement set-up for SP3

A glass fibre and an aperture transfer the measured optical power-on a large area photo detector. For description and the calculation base for the aperture see 8.1.

In ISO 21806-8, P_{opt3} is the value of the optical power, when the incoming signal passes the receiving contact end face.

Compared to the glass fibre used in the measurement set-up, the surface quality of a real SP3 contact might be worse. This might result in a lower input power than shown by the measurement. This small mismatch is covered by the specified connection loss. The axial offset shown in Figure 5 considers a requirement defined in the connector interface drawings (see ISO 21806-8).

8.3 Measurement of pigtail fibre attenuation

8.3.1 General

Attenuation of a pigtail fibre is measured using the insertion method, which shall be in accordance with IEC 61300-3-4. The measurement set-up consists of a light source, a mode mixer, which shall be in accordance with IEC 60793-1-40, and a launching fibre for generating the stimulus signal. For detection of optical power, a power meter is used. The connection between IUT and power meter is realized with a secondary launching fibre or an equivalent arrangement.

The measurement is performed in two steps. The first step consists of the measurement of the initial power level $P_{Initial}$ (see Figure 6) while the second step provides the measurement of the power level with the connected pigtail fibre P_{IUT} (see Figure 7). Figure 6 shows the measurement of $P_{Initial}$.

© ISO 2020 – All rights reserved

Documents
Document Sharing Hub
Full document details: BS ISO 21806-9:2020

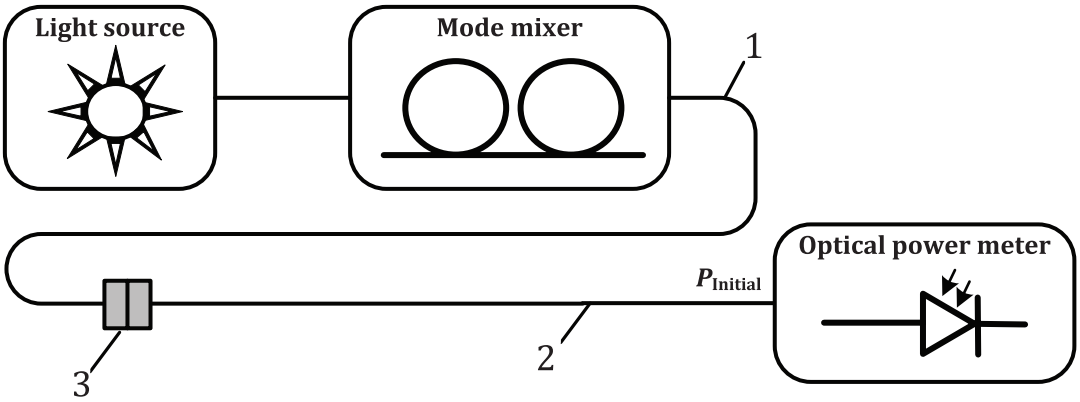

Key

1 launching fibre #1

2 launching fibre #2

3 connector

Figure 6 — Measurement of $P_{Initial}$

Figure 7 shows the measurement of P_{IUT}.

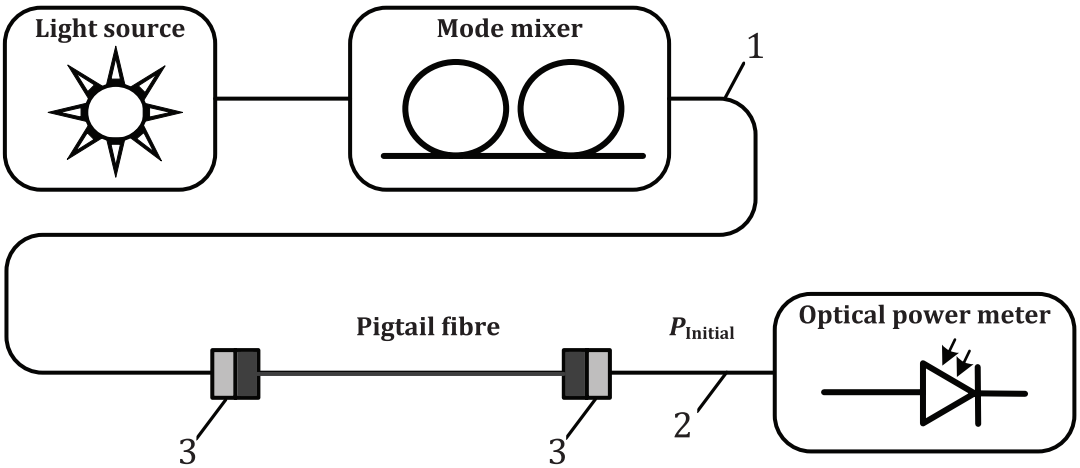

Key

1 launching fibre #1

2 launching fibre #2

3 connector

Figure 7 — Measurement of P_{IUT}

The optical power is measured in logarithmic scale (dBm). The attenuation of a pigtail fibre [see Formula (2)] is measured using the insertion method between $P_{Initial}$ and P_{IUT} expressed in (dB).

© ISO 2020 – All rights reserved
Documents
Document Sharing Hub
Full document details: BS ISO 21806-9:2020

$$A_{\text{PigTail}} = P_{\text{IUT}} - P_{\text{Initial}} \quad (2)$$

where

A_{PigTail} is the attenuation of the pig tail;

P_{IUT} is the power implementation under test;

P_{Initial} is the power initial.

8.3.2 Practical considerations

The optical power levels are measured within a diameter of 1 mm and an acceptance angle of 30°. This represents the coupling characteristic of a POF with NA = 0,5, which is typically used in the wire harness. The light source in combination with the mode mixer and the launching fibre #1 creates the equilibrium mode power distribution (EMD). The pigtail fibre is tested using the EMD launch condition. The secondary launching fibre is used for interfacing with the pigtail fibre. It would also eliminate power above NA = 0,5, if it exists. As long as the pigtail fibre does not modify the power distribution, the filter function of set-up the secondary launching fibre is not required. For simplification, the launching fibre #2 can be replaced by an SP2 adaptor or equivalent set-ups.

For testing, optical terminals are created for interfacing with the SP2/SP3 contact geometry on one side and with the ferrules for the SMD transceiver on the other side. The contact shape of the FOT-side ferrules provides different diameters (mechanical coding). Apart from that, the SP2/SP3 contacts have different contact dimensions. According to IEC 61300-3-4 an adaptor may be used (known as “temporary joint”) for coupling of these differently shaped ferrules.

Figure 8 shows the usage of adaptors for matching different contact shapes.

© ISO 2020 – All rights reserved

Documents
Document Sharing Hub
Full document details: BS ISO 21806-9:2020

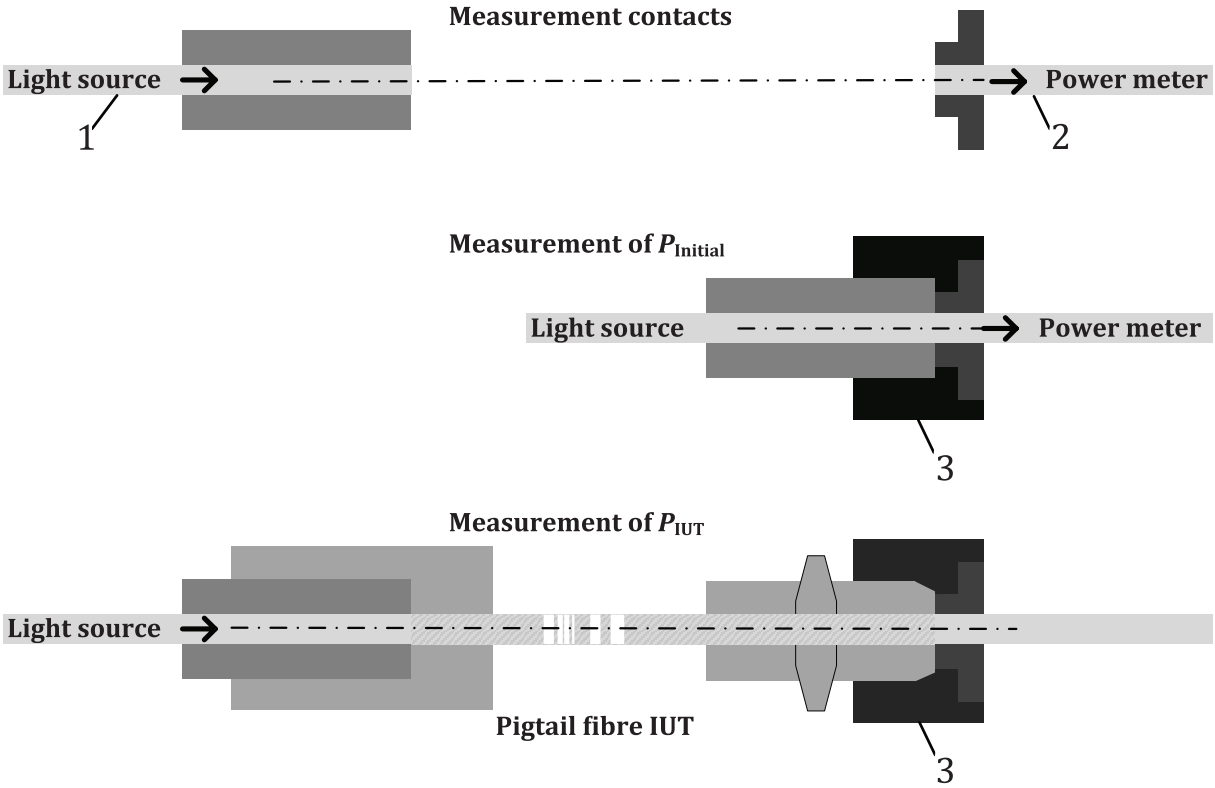

Key

1 launching fibre #1

2 launching fibre #2

3 adaptor "temporary joint"

Figure 8 — Usage of adaptors for matching different contact shapes

Figure 9 shows an example of a mode mixer (D = 42 mm, d = ~4,5 mm, number of turns = 10, length of optical fibre ≤15 m).

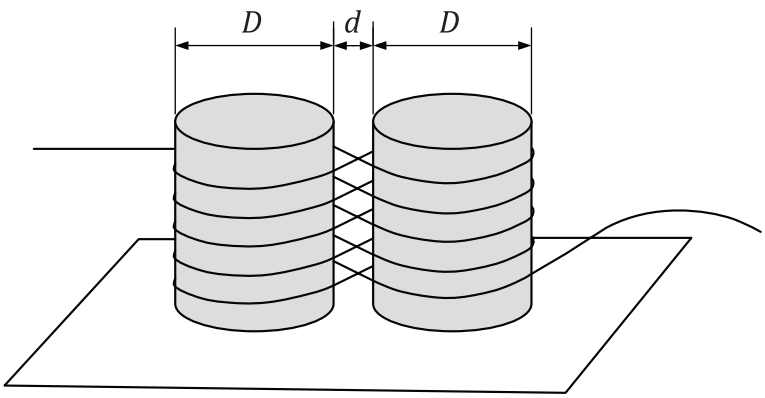

Key

d distance

D diameter

Figure 9 — Example of a mode mixer

© ISO 2020 – All rights reserved

Documents
Document Sharing Hub

Full document details: BS ISO 21806-9:2020

8.4 Spectral parameters at SP2

Centre wavelength and spectral width

ISO 21806-8 defines the wavelength spectrum of a transmitter with the parameter centre wavelength and spectral width. This is necessary to consider possible spectral asymmetries of state-of-the-art light sources.

The measurement procedure shall be in accordance with IEC 61280-1-3 with the following constraints:

— measurement resolution is ≤1 nm;

— SNR for the measurement equipment is ≥20 dB;

— SNR determines the part, which may be cut from the spectrum; and

— dark calibration.

Measurement resolution shall be ≤1 nm:

— SNR for the measurement equipment at least 20 dB;

— SNR determines the part which may be cut from the spectrum;

— dark calibration necessary.

Figure 10 shows an example of how to determine centre wavelength and spectral width.

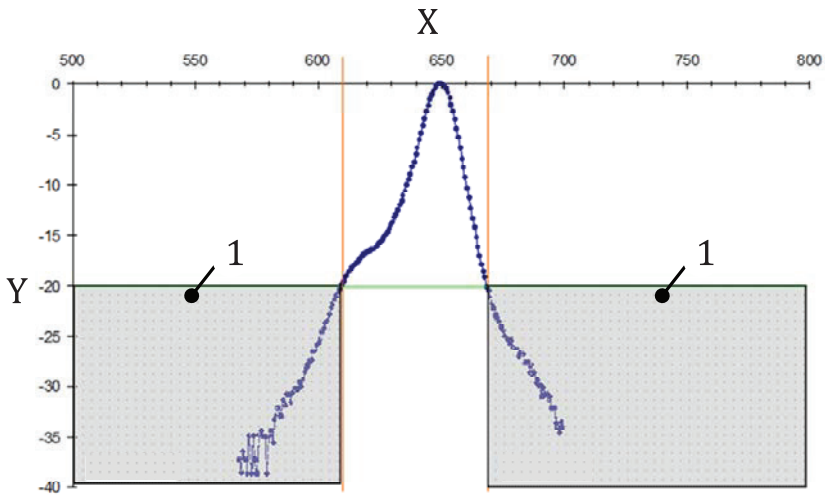

Key

X wavelength [nm]

Y relative optical power [dB]

1 measured values in grey zone are set to zero

Figure 10 — Example determination of spectral parameters

8.5 b_0/b_1 detection at SP2

To determine b_0/b_1 levels, the pattern generator shall generate the MOST150 oPHY stress pattern. At least 500 pulses (5 UI or 6 UI) shall be extracted out of the measured data. Extraction can be done by triggering on pulse-width ranges or by software-based selection on a prior acquired waveform. b_1 is the statistical mean of all amplitude samples lying in the slice between t_{OSLS} and t_{OSLE} for all acquired high pulses. b_0 is the statistical mean of all amplitude samples lying in the slice between t_{OSLS} and t_{OSLE} for all acquired low pulses. t_{OSLS} and t_{OSLE} are specified in Table 1.

© ISO 2020 – All rights reserved

Documents
Document Sharing Hub
Full document details: BS ISO 21806-9:2020

Table 1 — Optical signal level measurement interval

Measurement region	Value	Unit
t_{OSLS}	2,5	UI
t_{OSLE}	4,0	UI

The measured optical amplitudes b_1 and b_0 are an integral part of further measurements at SP2. The accuracy of b_0/b_1 detection determines the accuracy of such a linked measurement. Any variation in a measurement set-up or in the environmental conditions has an impact on b_1 and b_0. Therefore, b_0/b_1 detection should be a part of the linked measurement.

For b_0/b_1 detection, DC-coupled or AC-coupled measurement OECs may be used but there are restrictions given due to the corresponding measurement. Table 2 shows the parameters, which are based on b_0/b_1 and the restriction for the measurement OEC.

Measurement should compensate the DC offset of a DC-coupled OEC using dark calibration. For accurate measurement results, the signal-to-noise ratio (SNR) shall be in accordance with Annex B.

Table 2 — Restrictions for measurement OECs

Parameter	Symbol	Restriction	Usage of b_0 and b_1
Extinction ratio	r_{e2}	DC-coupled, BW > 250 MHz	Calculation, ratio of b_1 to b_0
Transition times	t_{r2}, t_{f2}	DC-coupled, BW > 750 MHz AC-coupled, BW > 750 MHz	Determination of the 20 % and 80 % amplitudes
Transferred jitter	J_{tr2}	DC-coupled, BW > 750 MHz AC-coupled, BW > 750 MHz	Determination of the trip-point, 50 % amplitude
Alignment jitter	---	DC-coupled, BW > 750 MHz AC-coupled, BW > 750 MHz	Normalization of the amplitude for adjusting the eye mask
Overshoot/ undershoot	---	DC-coupled, BW > 750 MHz AC-coupled, BW > 750 MHz	Normalization of the amplitude for adjusting the masks

In the case of using an AC-coupled measurement OEC for all measurements excluding extinction ratio, a DC-coupled OEC with lower bandwidth-setting such as used for MOST25 oPHY can be reused for determination of extinction ratio. See 6.2 for more detailed OEC requirements.

Figure 11 provides an example of how to measure b_0 and b_1 by a histogram method.

© ISO 2020 – All rights reserved
Documents
Document Sharing Hub
Full document details: BS ISO 21806-9:2020

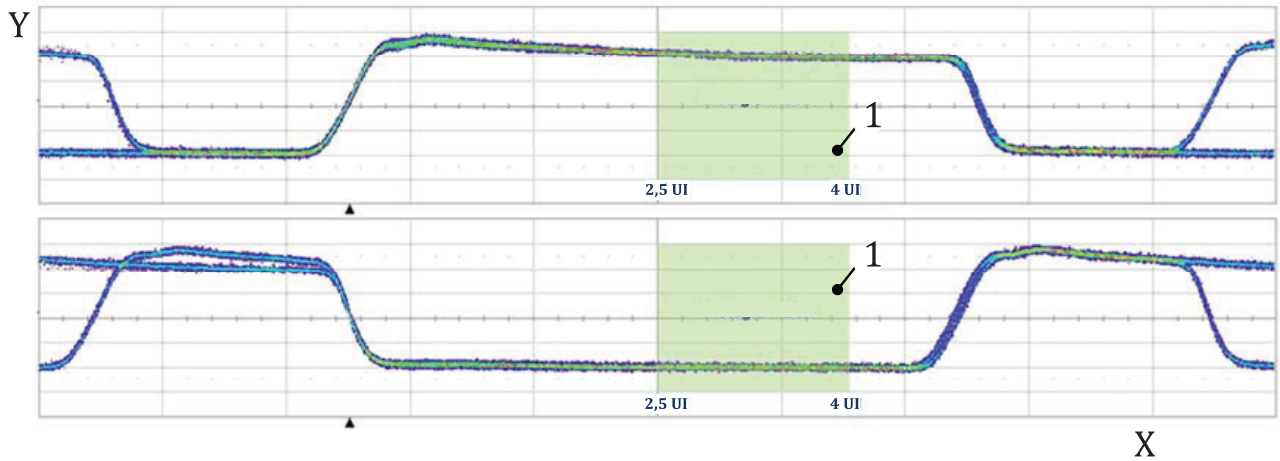

Key

X normalised timeline

Y normalised amplitude

1 histogram box

Oscilloscope measurements: b_{1mean} = 192,37 mV, b_{0mean} = −246,46 mV, ρ_{BR} = 147,455 989 Mbit/s.

Figure 11 — Detection of b_0 and b_1

Measuring optical signals at SP2 using averaging is described in Annex A.

8.6 Extinction ratio at SP2

Extinction ratio r_{e2} is calculated based on the measured optical levels for b_1 and b_0 as described in 8.5 by using a DC-coupled OEC according to Table 2.

The extinction ratio r_{e2} is given with Formulae (3).

$$r_{e2} = 10 \times \log\left(\frac{b_1}{b_0}\right) \tag{3}$$

where

r_{e2} is the extinction ratio;

b_0 is the optical signal level when a logic 0 is transmitted;

b_1 is the optical signal level when a logic 1 is transmitted.

For measuring b_1 and b_0, a DC-coupled OEC according to Table 2 shall be used. The measurement procedure shall be in accordance with IEC 61280-2-2.

8.7 Optical overshoot and undershoot at SP2

8.7.1 General

The optical pulse shape of an SP2 signal is tested with a parameterized mask. The mask parameters are given in normalized amplitude, which is based on the measured optical signal levels b_0 and b_1. Time parameters are specified in units of UI and the origin for the timescale is defined from the midpoint of the rising or falling edge of the signal. Overshoot and undershoot measurements contain only one edge of a pulse class, which forms the trigger edge. Timing variations that might be included in the data stream and be visible on subsequent edges are excluded from this measurement. The timing corridor

© ISO 2020 – All rights reserved

AVA Documents Document Sharing Hub
Full document details: BS ISO 21806-9:2020

given around the trigger point (overshoot H_O, C_O, undershoot G_U, R_U given in this document) serves for tolerating noise coming from the measurement OEC. The test case shall verify that the measured signal does not touch the keep-out areas of the masks.

There are two basic strategies to perform the measurement:

a) Draw a mask that is adjusted in vertical and horizontal scale to the conditions (b_1, b_0, timing resolution) given by a particular measured waveform.

b) Predefine a fixed scheme for horizontal and vertical settings of the mask and normalize the measured waveform.

8.7.2, 8.7.3 and 8.7.4 show an overshoot and undershoot measurement using the basic strategy b). The oscilloscope's display grid is used (ten horizontal divisions and eight vertical divisions) to fix the tolerance scheme.

8.7.2 Overshoot measurement example

Horizontally, 2 UI are displayed. According to the requested timing extremes of −0,63 UI (A_O, F_O) and 1,37 UI (K_O, E_O) given in the mask parameters in this document, the zero point is set to 3,15 divisions. Vertically, the 50 % level of the amplitude swing is centred in the oscilloscope's grid; b_0 is set to −2 divisions (see Figure 12), b_1 is set to +2 divisions, which gives sufficient space for displaying the maximum tolerable overshoot of 40 %. The trigger is set to rising edge for all types of data pulses (2 UI to 6 UI).

The waveform's amplitude is normalised using Formulae (4), (5), and (6).

$$a_{\text{normal}}(i) = \frac{a(i) - v_{\text{offset}}}{v_{\text{scale}}} \tag{4}$$

where

a is the amplitude;

a_{normal} is the normalised amplitude;

i is the index, ranging between 1 and the length of the waveform;

v_{offset} is 50 % level;

v_{scale} is the full swing (b_1 - b_0), which is normalised to 4 divisions on the oscilloscope display.

$$v_{\text{offset}} = \frac{(b_1 + b_0)}{2} \tag{5}$$

where

v_{offset} is 50 % level;

b_0 is the optical signal level when a logic 0 is transmitted;

b_1 is the optical signal level when a logic 1 is transmitted.

© ISO 2020 – All rights reserved
Documents
Document Sharing Hub
Full document details: BS ISO 21806-9:2020