BS ISO 21919-1:2019

BSI Standards Publication

Automation systems and integration — Interfaces for automated machine tending

Part 1: Overview and fundamental principles

Documents
Document Sharing Hub

Full document details: BS ISO 21919-1:2019

National foreword

This British Standard is the UK implementation of ISO 21919-1:2019.

The UK participation in its preparation was entrusted to Technical Committee AMT/4, Industrial data and manufacturing interfaces.

A list of organizations represented on this committee can be obtained on request to its secretary.

This publication does not purport to include all the necessary provisions of a contract. Users are responsible for its correct application.

© The British Standards Institution 2019
Published by BSI Standards Limited 2019

ISBN 978 0 580 99609 2

ICS 25.040.20

Compliance with a British Standard cannot confer immunity from legal obligations.

This British Standard was published under the authority of the Standards Policy and Strategy Committee on 30 November 2019.

Amendments/corrigenda issued since publication

Date	Text affected

Documents
Document Sharing Hub

Full document details: BS ISO 21919-1:2019

INTERNATIONAL STANDARD

ISO 21919-1

First edition
2019-10

Automation systems and integration — Interfaces for automated machine tending —

Part 1: Overview and fundamental principles

Systèmes d'automatisation et integration — Interfaces pour le chargement automatisé des machines —

Partie 1: Aperçu et principes fondamentaux

Reference number
ISO 21919-1:2019(E)

Documents
Document Sharing Hub

© ISO 2019

Full document details: BS ISO 21919-1:2019

COPYRIGHT PROTECTED DOCUMENT

© ISO 2019

All rights reserved. Unless otherwise specified, or required in the context of its implementation, no part of this publication may be reproduced or utilized otherwise in any form or by any means, electronic or mechanical, including photocopying, or posting on the internet or an intranet, without prior written permission. Permission can be requested from either ISO at the address below or ISO's member body in the country of the requester.

ISO copyright office
CP 401 • Ch. de Blandonnet 8
CH-1214 Vernier, Geneva
Phone: +41 22 749 01 11
Fax: +41 22 749 09 47
Email: copyright@iso.org
Website: www.iso.org

Published in Switzerland

© ISO 2019 – All rights reserved

Documents
Document Sharing Hub

Full document details: BS ISO 21919-1:2019

Contents

Page

Foreword ... **iv**
Introduction ... **v**
1 Scope ... **1**
2 Normative references ... **1**
3 Terms and definitions ... **1**
4 Description of the interfaces ... **4**
4.1 General ... 4
4.2 Structure, range and standards of the interface ... 4
4.2.1 General ... 4
4.2.2 Characteristics of the interface ... 4
4.2.3 Conformance class ... 5
4.2.4 Conformance options ... 6
4.2.5 Extension of the interfaces ... 7
4.2.6 Description of the signal structure ... 8
4.2.7 Index for parts-related signals ... 12
4.2.8 Standards for signal exchange ... 12
5 Documentation ... **14**
Annex A (informative) **Illustrative examples** ... **15**
Bibliography ... **18**

© ISO 2019 – All rights reserved

Documents
Document Sharing Hub
Full document details: BS ISO 21919-1:2019

Foreword

ISO (the International Organization for Standardization) is a worldwide federation of national standards bodies (ISO member bodies). The work of preparing International Standards is normally carried out through ISO technical committees. Each member body interested in a subject for which a technical committee has been established has the right to be represented on that committee. International organizations, governmental and non-governmental, in liaison with ISO, also take part in the work. ISO collaborates closely with the International Electrotechnical Commission (IEC) on all matters of electrotechnical standardization.

The procedures used to develop this document and those intended for its further maintenance are described in the ISO/IEC Directives, Part 1. In particular, the different approval criteria needed for the different types of ISO documents should be noted. This document was drafted in accordance with the editorial rules of the ISO/IEC Directives, Part 2 (see www.iso.org/directives).

Attention is drawn to the possibility that some of the elements of this document may be the subject of patent rights. ISO shall not be held responsible for identifying any or all such patent rights. Details of any patent rights identified during the development of the document will be in the Introduction and/or on the ISO list of patent declarations received (see www.iso.org/patents).

Any trade name used in this document is information given for the convenience of users and does not constitute an endorsement.

For an explanation of the voluntary nature of standards, the meaning of ISO specific terms and expressions related to conformity assessment, as well as information about ISO's adherence to the World Trade Organization (WTO) principles in the Technical Barriers to Trade (TBT), see www.iso.org/iso/foreword.html.

This document was prepared by Technical Committee ISO/TC 184, *Automation systems and integration*, Subcommittee SC 1, *Physical device control*.

A list of all parts in the ISO 21919 series can be found on the ISO website.

Any feedback or questions on this document should be directed to the user's national standards body. A complete listing of these bodies can be found at www.iso.org/members.html.

© ISO 2019 – All rights reserved
Documents
Document Sharing Hub
Full document details: BS ISO 21919-1:2019

Introduction

Automated machine tending refers to the automatic loading or unloading of one or more machines by using a machine tending device.

NOTE Examples for machines are machine tools, typically computer numerically controlled (CNC), metrology co-ordinate measuring machines (CMM), 3D structured light scanner (3DSL), and X-ray machines. Examples for machine tending devices are robots, handling systems, gantries, autonomous intelligent vehicles (AIV), and automated guided vehicles (AGV).

Automated machine tending is a substantial element in highly productive industrial environments. It is a complex endeavour. Necessary devices are complex systems in themselves, are often provided by different suppliers and they encounter each other for the first time at the production site. For a trouble-free collaboration of all units, a clear definition of the interfaces is indispensable. For manufacturing systems, such standardized interfaces at an international level have not yet been defined.

The definition of the interfaces is often project-specific from the start or each supplier tries to establish its in-house standards. These procedures cause great efforts, are prone to failure and take a lot of time and manpower. As each interface is built individually and testing beforehand is often not possible, commissioning times exceed the planned ones. Machine builders, system integrators and production plant operators report these issues being substantial obstacles for such automation projects.

Standardized interfaces lead to lean coordination processes, give higher planning reliability, shorten times for commissioning and are less error-prone.

On the other hand, automated machine tending systems can be very complex systems and standards need to be flexible enough to allow an adaption to the requirements of individual projects.

Applications range from simple parts removal to material flow dedicated complex production lines. The processing technologies of the machines are independent from the interface and a majority of machine technologies can be integrated with the same standard.

Figure 1 and Figure 2 display the range of complexity of machine tending systems covered by ISO 21919. Figure 1 shows an example of a simple automated machine tending system, consisting of a machine tool loaded by a conveyor.

© ISO 2019 – All rights reserved

Documents
Document Sharing Hub
Full document details: BS ISO 21919-1:2019

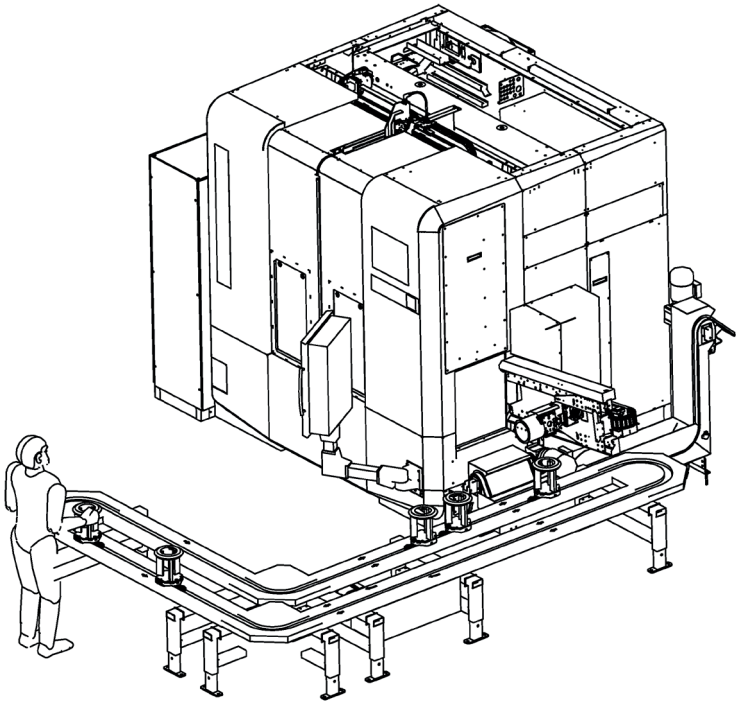

Figure 1 — Example of a simple automated machine tending system

Figure 2 shows an example of a complex production line with five computer numerically controlled machine tools tended by a loading gantry.

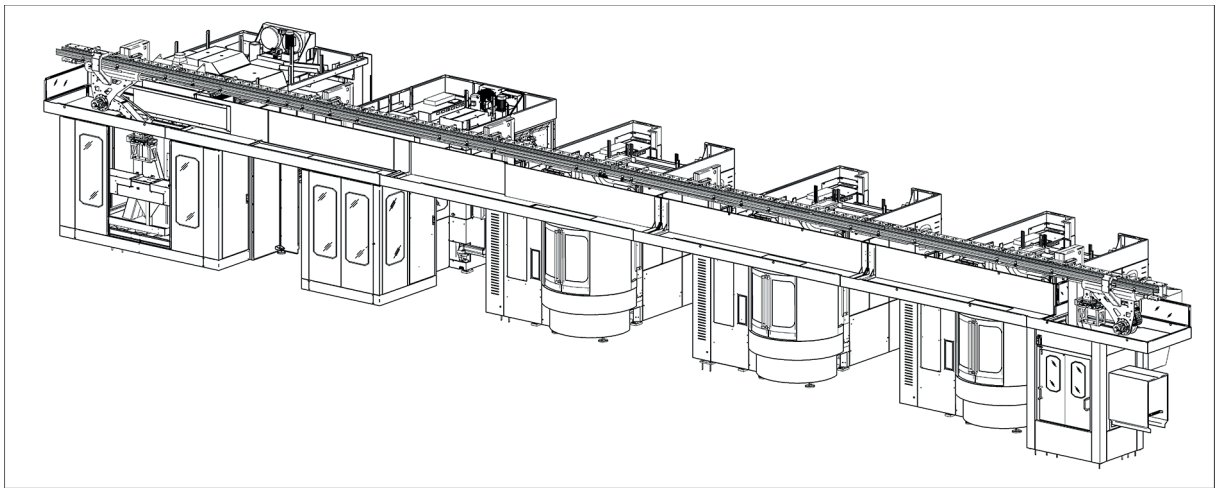

Figure 2 — Example of a complex production line loaded by a gantry

In general, the interfaces for automated machine tending are composed of mechanical, control-related, and safety-related connections.

© ISO 2019 – All rights reserved
Documents
Document Sharing Hub
Full document details: BS ISO 21919-1:2019

Automation systems and integration — Interfaces for automated machine tending —

Part 1:
Overview and fundamental principles

1 Scope

ISO 21919 describes interfaces for automated machine tending of at least one computer numerically controlled (CNC) machine by using a machine tending device. These interfaces are the link between automated machine tending devices and machines used for production. The automated machine tending is initiated by either the machine tending system or by the machine.

This document gives an overview and defines the fundamental principles on how the interfaces are set up. It defines the necessary vocabulary and sets the syntax for the structure of signals. It distinguishes between the safety interface, the control interface and project specific extensions.

This document defines three conformance classes and dedicated conformance options. Classes and options consist of a number of signals to simultaneously:

— allow a flexible adaptation of the interface(s) to a project-specific scope of functions;

— tie sets of signals tight enough to avoid unnecessary coordination efforts between suppliers of the machine tending devices and machines.

ISO 21919 concentrates on the control-related and safety-related connections. It does not describe the mechanical connections, it does not determine the transfer physics, a pin assignment, the hardware of the interfaces or measure of communication, e.g. protocol, and it is not intended to be used for communication to a MES (Manufacturing Execution System).

NOTE ISO 21919-2 deals with the safety interface and control interface, allocating signals to a conformance class and/or conformance option, describing the detailed functions of each signal, describing and displaying the timing interactions between signals in flow charts and showing examples for safety matrices and safety-related functional relationships.

2 Normative references

There are no normative references in this document.

3 Terms and definitions

For the purposes of this document, the following terms and definitions apply.

ISO and IEC maintain terminological databases for use in standardization at the following addresses:

— ISO Online browsing platform: available at https://www.iso.org/obp

— IEC Electropedia: available at http://www.electropedia.org/

© ISO 2019 – All rights reserved

Documents
Document Sharing Hub
Full document details: BS ISO 21919-1:2019