BS ISO 21927-3:2021

BSI Standards Publication

Smoke and heat control systems

Part 3: Specifications for powered smoke and heat exhaust ventilators

Documents
Document Sharing Hub

Full document details: BS ISO 21927-3:2021

National foreword

This British Standard is the UK implementation of ISO 21927-3:2021. It supersedes BS ISO 21927-3:2006+A1:2010, which is withdrawn.

The UK participation in its preparation was entrusted to Technical Committee FSH/25, Smoke, heat control systems and components.

A list of organizations represented on this committee can be obtained on request to its committee manager.

Contractual and legal considerations

This publication has been prepared in good faith, however no representation, warranty, assurance or undertaking (express or implied) is or will be made, and no responsibility or liability is or will be accepted by BSI in relation to the adequacy, accuracy, completeness or reasonableness of this publication. All and any such responsibility and liability is expressly disclaimed to the full extent permitted by the law.

This publication is provided as is, and is to be used at the recipient's own risk.

The recipient is advised to consider seeking professional guidance with respect to its use of this publication.

This publication is not intended to constitute a contract. Users are responsible for its correct application.

© The British Standards Institution 2021
Published by BSI Standards Limited 2021

ISBN 978 0 580 99339 8

ICS 13.220.20

Compliance with a British Standard cannot confer immunity from legal obligations.

This British Standard was published under the authority of the Standards Policy and Strategy Committee on 31 May 2021.

Amendments/corrigenda issued since publication

Date	Text affected

Documents
Document Sharing Hub

Full document details: BS ISO 21927-3:2021

INTERNATIONAL STANDARD

ISO 21927-3

Second edition
2021-05

Smoke and heat control systems —

Part 3: Specifications for powered smoke and heat exhaust ventilators

Systèmes de contrôle de fumée et de chaleur —

Partie 3: Spécifications pour les ventilateurs mécaniques d'évacuation des fumées et de la chaleur

Reference number
ISO 21927-3:2021(E)

Documents
Document Sharing Hub
© ISO 2021

Full document details: BS ISO 21927-3:2021

COPYRIGHT PROTECTED DOCUMENT

© ISO 2021

All rights reserved. Unless otherwise specified, or required in the context of its implementation, no part of this publication may be reproduced or utilized otherwise in any form or by any means, electronic or mechanical, including photocopying, or posting on the internet or an intranet, without prior written permission. Permission can be requested from either ISO at the address below or ISO's member body in the country of the requester.

ISO copyright office
CP 401 • Ch. de Blandonnet 8
CH-1214 Vernier, Geneva
Phone: +41 22 749 01 11
Email: copyright@iso.org
Website: www.iso.org

Published in Switzerland

© ISO 2021 – All rights reserved

Documents
Document Sharing Hub

Full document details: BS ISO 21927-3:2021

Contents

Page

Foreword ... **v**

Introduction ... **vi**

1 Scope ... **1**

2 Normative references ... **1**

3 Terms, definitions, symbols and abbreviated terms ... **1**

4 Requirements ... **2**
- 4.1 Response delay (response time) ... 2
  - 4.1.1 Opening under wind load within a given time ... 2
  - 4.1.2 Opening under snow load within a given time ... 3
- 4.2 Operational reliability ... 3
  - 4.2.1 General ... 3
  - 4.2.2 Application categories ... 3
  - 4.2.3 Motor rating ... 3
- 4.3 Effectiveness of smoke/hot gas extraction ... 4
  - 4.3.1 General ... 4
  - 4.3.2 Gas flow and pressure maintenance during smoke and heat extraction test ... 4
- 4.4 Resistance to fire ... 4
- 4.5 Ability to open under environmental conditions ... 4
  - 4.5.1 Opening under wind load within a given time ... 4
  - 4.5.2 Opening under snow load within a given time ... 4
- 4.6 Durability of operational reliability ... 4

5 Testing, assessment and sampling methods ... **4**
- 5.1 General ... 4
- 5.2 Test of response delay (response time) opening under wind / snow load within a given time ... 5
  - 5.2.1 Wind load ... 5
  - 5.2.2 Snow load ... 6
- 5.3 Operational reliability ... 6
  - 5.3.1 Application categories ... 6
  - 5.3.2 Motor rating ... 6
- 5.4 Effectiveness of smoke/hot gas extraction: gas flow and pressure maintenance during smoke and heat extraction test ... 6
- 5.5 Resistance to fire ... 6
- 5.6 Ability to open under environmental conditions: opening under wind or snow load within a given time ... 6
- 5.7 Durability of operational reliability ... 6

6 Marking, labelling and packaging ... **7**

Annex A (normative) **Criteria to determine the family of fans in order to select the sizes to be tested** ... **8**

Annex B (normative) **Criteria to determine a family of motors in order to select the sizes to be tested** ... **29**

Annex C (normative) **Test method for the determination of fire resistance of powered smoke and heat control ventilators (fans)** ... **38**

Annex D (normative) **Test methods for electric motors to determine the impact of the changes on the product characteristics** ... **47**

Annex E (normative) **Test method for assessing the response delay and ability to open under environmental conditions** ... **52**

Annex F (informative) **Explanatory notes** ... **53**

Annex G (informative) **General guidance for installation and maintenance** ... **69**

© ISO 2021 – All rights reserved

AVA Documents
Document Sharing Hub

Full document details: BS ISO 21927-3:2021

Bibliography **70**

© ISO 2021 – All rights reserved

Documents
Document Sharing Hub
Full document details: BS ISO 21927-3:2021

Foreword

ISO (the International Organization for Standardization) is a worldwide federation of national standards bodies (ISO member bodies). The work of preparing International Standards is normally carried out through ISO technical committees. Each member body interested in a subject for which a technical committee has been established has the right to be represented on that committee. International organizations, governmental and non-governmental, in liaison with ISO, also take part in the work. ISO collaborates closely with the International Electrotechnical Commission (IEC) on all matters of electrotechnical standardization.

The procedures used to develop this document and those intended for its further maintenance are described in the ISO/IEC Directives, Part 1. In particular, the different approval criteria needed for the different types of ISO documents should be noted. This document was drafted in accordance with the editorial rules of the ISO/IEC Directives, Part 2 (see www.iso.org/directives).

Attention is drawn to the possibility that some of the elements of this document may be the subject of patent rights. ISO shall not be held responsible for identifying any or all such patent rights. Details of any patent rights identified during the development of the document will be in the Introduction and/or on the ISO list of patent declarations received (see www.iso.org/patents).

Any trade name used in this document is information given for the convenience of users and does not constitute an endorsement.

For an explanation of the voluntary nature of standards, the meaning of ISO specific terms and expressions related to conformity assessment, as well as information about ISO's adherence to the World Trade Organization (WTO) principles in the Technical Barriers to Trade (TBT), see www.iso.org/iso/foreword.html.

This document was prepared by Technical Committee ISO/TC 21, *Equipment for fire protection and fire fighting*, Subcommittee SC 11, *Smoke and heat control systems and components*.

This second edition cancels and replaces the first edition (ISO 21927-3:2006), which has been technically revised. It also incorporates the Amendment ISO 21927-3:2006/Amd. 1:2010.

The main changes compared to the previous edition are as follows:

— amendment of the test apparatus;

A list of all parts in the ISO 21927 series can be found on the ISO website.

Any feedback or questions on this document should be directed to the user's national standards body. A complete listing of these bodies can be found at www.iso.org/members.html.

© ISO 2021 – All rights reserved

Documents
Document Sharing Hub
Full document details: BS ISO 21927-3:2021

Introduction

Smoke and heat exhaust ventilation systems create a smoke-free layer above the floor by removing smoke and, thus, improve the conditions for the safe escape and/or rescue of people and animals and the protection of property and permit the fire to be fought while still in its early stages. They also exhaust hot gases released by a fire in the developing stage.

The use of smoke and heat exhaust ventilation systems to create smoke-free areas beneath a buoyant smoke layer has become widespread. Their value in assisting in the evacuation of people from construction works, reducing fire damage and financial loss by preventing smoke logging, facilitating firefighting, reducing roof temperatures and delaying the lateral spread of fire is firmly established. For these benefits to be obtained, it is essential that smoke and heat exhaust ventilation systems be a scheme of safety equipment intended to perform a positive role in a fire emergency.

© ISO 2021 – All rights reserved
Documents
Document Sharing Hub
Full document details: BS ISO 21927-3:2021

Smoke and heat control systems —

Part 3: Specifications for powered smoke and heat exhaust ventilators

1 Scope

This document specifies the product characteristics for powered smoke and heat control ventilators (fans) intended to be used as part of a powered smoke and heat control ventilation system in construction works.

It provides test and assessment methods of the characteristics and the conformance criteria of the test assessment results.

This document applies to the following:

a) fans for smoke and heat control ventilation;

b) impulse/jet fans for smoke and heat control ventilation.

2 Normative references

The following documents are referred to in the text in such a way that some or all of their content constitutes requirements of this document. For dated references, only the edition cited applies. For undated references, the latest edition of the referenced document (including any amendments) applies.

ISO 281, *Rolling bearings — Dynamic load ratings and rating life*

ISO 834-1, *Fire-resistance tests — Elements of building construction — Part 1: General requirements*

ISO 5167 (all parts), *Measurement of fluid flow by means of pressure differential devices inserted in circular cross-section conduits running full*

ISO 5801, *Fans — Performance testing using standardized airways*

IEC 60034-1, *Rotating electrical machines — Part 1: Rating and performance*

IEC 60034-2-1, *Rotating electrical machines — Part 2-1: Standard methods for determining losses and efficiency from tests (excluding machines for traction vehicles)*

IEC 60085, *Electrical insulation — Thermal evaluation and designation*

IEC 60584-1, *Thermocouples — Part 1: EMF specifications and tolerances*

EN 1363-1, *Fire resistance tests — Part 1: General Requirements*

EN 13501-4, *Fire classification of construction products and building elements — Part 4: Classification using data from fire resistance tests on components of smoke control systems*

3 Terms, definitions, symbols and abbreviated terms

For the purposes of this document, the following terms and definitions apply.

© ISO 2021 – All rights reserved

Documents
Document Sharing Hub
Full document details: BS ISO 21927-3:2021

ISO and IEC maintain terminological databases for use in standardization at the following addresses:

— ISO Online browsing platform: available at https://www.iso.org/obp

— IEC Electropedia: available at http://www.electropedia.org/

3.1
powered smoke and heat control ventilator
PSHC ventilator
smoke-ventilating fan that is suitable for handling smoke and hot gases for a specified time/temperature profile

3.2
smoke reservoir
region within a building, limited or bordered by smoke curtains or structural elements, which retains a thermally buoyant smoke layer in the event of a fire

3.3
powered roof ventilator
fan designed for mounting on a roof and with exterior weather protection

3.4
smoke reservoir ventilator
ventilator suitable for operation fully immersed in a *smoke reservoir* (3.2)

3.5
product family
physically similar fans using the same form of construction and materials throughout, with the same methods of impeller construction, motor mounting and construction, and electrical connection in which the following may vary across the range:

— overall dimensions of the fans; and/or

— the impeller diameter and width, hub size, blade length and number of blades of the impeller; and/or

— the motor details, as per 3.7

3.6
impulse/jet fans for smoke and heat control ventilation
fan used for producing a jet of air in a space and unconnected to any ducting

Note 1 to entry: The air jet may be used, for example, for adding momentum to the air within a duct, a tunnel or other space, or for intensifying the heat transfer in a determined zone.

3.7
motor rating
maximum power that a motor delivers continuously without exceeding the allowable temperature rise

4 Requirements

4.1 Response delay (response time)

4.1.1 Opening under wind load within a given time

If the fan is designed to be installed at the atmospheric termination of a smoke control system (e.g. powered roof ventilator) and is fitted with a fan shutter flaps or louvers which project above the wind deflectors (cowl or wind shield), the shutter, flaps or louvers shall open in less than 30 s when tested in accordance with 5.2.1.

© ISO 2021 – All rights reserved
Documents
Document Sharing Hub
Full document details: BS ISO 21927-3:2021

4.1.2 Opening under snow load within a given time

If the fan is designed to be installed at the atmospheric termination of a smoke control system (e.g. powered roof ventilator) and is fitted with a fan shutter flaps or louvers which project above the wind deflectors (cowl or wind shield), the shutter, flaps or louvers shall open in less than 30 s when tested in accordance with 5.2.2.

4.2 Operational reliability

4.2.1 General

Operational reliability of a PSHC ventilator (fan) shall be demonstrated by verification against application categories and by verification of motor ratings.

4.2.2 Application categories

To demonstrate its operational reliability, a PSHC ventilator (fan) shall be verified against certain categories.

Table 1 shows the relevant method to allocate the results in the corresponding category.

Table 1 — Application categories

Subclause of the test method (within ISO 21927-3)	Application category	Conformance criteria
5.3.1	Thermally insulated	When tested in accordance with Annex C: — the outer surface temperature of a thermal insulated fan shall not increase by more than 180 K for any individual value; — the cooling air expelled from the unit shall not exhibit an increase of temperature of more than 180 K from the initial room temperature.
5.3.1	Thermally uninsulated	—
C.3.3	Installation inside the smoke reservoir	—
C.3.3	Installation outside the smoke reservoir	—
A.1 i)	Horizontal direction of motor shaft	—
A.1 i)	Vertical direction of motor shaft	—
A.1 n)	Converter feed (driven by frequency converter)	—
A.1 n)	Direct feed (no speed variation)	—
C.4.2.1	Dual purpose use	—
C.4.2.1, C.4.2.2	Emergency only use	—
C.3.3	Ducted cooling air required	—

4.2.3 Motor rating

Since the PSHC ventilator (fan) can be operated at different temperatures (current or emergency), motors shall be selected for operation at the power required for normal ambient temperature and not just for operation at high temperature.

© ISO 2021 – All rights reserved

Documents
Document Sharing Hub
Full document details: BS ISO 21927-3:2021

Selection of the motors shall conform with the following requirements:

— Motors shall conform with the requirements of IEC 60034-1.

— Motor ratings shall be limited by the temperature rise for one class lower than the insulation class of the motor, as defined in IEC 60085.

— The fan tested in accordance with 5.3.2 shall conform with the stability requirement in C.4.2.2.

4.3 Effectiveness of smoke/hot gas extraction

4.3.1 General

The effectiveness of smoke/hot gas extraction of the fan is the ability to continue to extract the required volume flow at high temperature.

4.3.2 Gas flow and pressure maintenance during smoke and heat extraction test

The effectiveness of smoke/hot gas extraction is demonstrated by conformance with the performance requirements in C.5, when tested according to 5.4.

4.4 Resistance to fire

The fan is shown to be functioning satisfactorily by its continued ability to provide the initial volume or pressure within the defined limits in C.5, when tested according to 5.5.

The test result shall be classified in accordance with EN 13501-4.

4.5 Ability to open under environmental conditions

4.5.1 Opening under wind load within a given time

When the fan is fitted with shutter, louvers or dampers, their ability to open under environmental conditions shall be demonstrated by fulfilling the requirements in E.5 when tested in accordance with 5.6.

4.5.2 Opening under snow load within a given time

When the fan is fitted with shutter, louvers or dampers, their ability to open under environmental conditions shall be demonstrated by fulfilling the requirements in E.5 when tested in accordance with 5.6.

4.6 Durability of operational reliability

Durability of operational reliability is demonstrated by motor rating according to 4.2.3 when tested according to 5.7.

5 Testing, assessment and sampling methods

5.1 General

PSHC ventilator (fan), tests shall be carried out in accordance with Annexes A, B, C and E.

For each test, a test report shall be prepared in accordance with Annex C.

© ISO 2021 – All rights reserved
Documents
Document Sharing Hub
Full document details: BS ISO 21927-3:2021

A fan can be tested completely assembled with ancillaries, for example:

— flexible connection elements;

— anchors (fastenings for mounting to external structure);

— airflow operated dampers or external powered dampers;

— shock absorber (anti-vibration mount);

— sound absorber (silencer or acoustic attenuator);

— support construction (e.g. for powered roof or partition fans);

— thermal protection (e.g. PTC thermistor, Thermocouple, Pt100, etc.);

— ON-OFF switch and other electrical ancillaries (e.g. electrical safety box) which are directly mounted on the fan;

— guide vanes;

— flow deflectors;

— a jet fan shall be tested completely assembled and suspended from a supporting construction in accordance with the manufacturer's installation instructions.

For testing of motors alone, tests shall be carried out and test reports prepared in accordance with Annex D.

5.2 Test of response delay (response time) opening under wind / snow load within a given time

5.2.1 Wind load

The fan shutter, flaps or louvers shall open in less than 30 s against a horizontally applied load of 200 Pa, simulated by means of an additional fan blowing on the flap at a suitable velocity, or by any suitable mechanical means when the fan is tested in accordance with Annex E and/or Annex C.

WARNING — For fans which use the air pressure from the fan to open flaps or louvers.

Due to the temperature rise, the density of air decreases resulting in a corresponding decrease in the pressure developed. This pressure is needed to open the termination system (flaps or louvers).

In this case, the laboratory shall perform the wind load test also during the high temperature test.

If fans selected according to Annex A and tested according to Annex C are intended for use with external, air-pressure operated shutters, the combination shall also be tested with a wind load according to Annex E.

The operating position can be considered as reached if the volume flow exhausted by the fan working under wind loads did not decrease by more than 10 % of that exhausted by the fan working without these loads.

If a fan intended for mounting on an external wall is fitted with external shutters, flaps or louvers and/or is not protected from wind force acting against it by a deflector or cowl, it shall be tested in accordance with this Clause. Otherwise, the manufacture shall include a statement in his instructions that suitable wind guarding shall be fitted by the installer.

© ISO 2021 – All rights reserved

Documents
Document Sharing Hub
Full document details: BS ISO 21927-3:2021

5.2.2 Snow load

The fan shutter, flaps or louvers shall open in less than 30 s against a vertically applied load shown in Table 2, simulated by any suitable mechanical means, when the fan is tested in accordance with Annex E, at ambient temperature only.

Table 2 — Snow load classes

Class	Load Pa
SL 0	0
SL 125	125
SL 250	250
SL 500	500
SL 1 000	1 000
SL A	A

The operating position can be considered as reached if the volume flow exhausted by the fan working under snow loads did not decrease by more than 10 % of that exhausted by the fan working without these loads.

Where the minimum angle of installation recommended by the supplier exceeds 45° from the horizontal, the fan takes the classification SL 1 000 without a test, except where snow is prevented from slipping from the fan, for example by wind deflectors. In this case, the fan shall be tested for a snow load classification which shall not be less than SL = 2 000 · d, where d is the depth of snow, in metres, which can be contained with the confines of the deflectors.

5.3 Operational reliability

5.3.1 Application categories

The relevant test methods are those indicated in Table 1 in 4.2.2.

5.3.2 Motor rating

The test method to be applied is in C.4.2.

5.4 Effectiveness of smoke/hot gas extraction: gas flow and pressure maintenance during smoke and heat extraction test

The test method is given in Annex C.

5.5 Resistance to fire

The test method is given in Annex C.

5.6 Ability to open under environmental conditions: opening under wind or snow load within a given time

The test method is given in Annex E.

5.7 Durability of operational reliability

Durability of operational reliability is demonstrated by the test method given in 5.3.2.

© ISO 2021 – All rights reserved
Documents
Document Sharing Hub
Full document details: BS ISO 21927-3:2021

6 Marking, labelling and packaging

The PSHC ventilator (fan) shall be marked with the following:

— the manufacturer’s name or trademark;

— the resistance to fire classification;

— a reference to this document and its year of its publication (i.e. ISO 21927-3:2021, followed by the generic name of the product "powered smoke and heat control ventilator";

— the model/type;

— power requirements, e.g. power, current, voltage and rotational speed;

— the snow load class where applicable;

— the flow direction inside the fan (motor upstream, downstream or both);

— the direction of the motor shaft (vertical, horizontal or both);

— the minimum flow and maximum temperature of cooling air, where applicable;

— information about electrical connections of motor (e.g. Y or Δ);

— the following statement: "This powered smoke and heat control ventilator shall be installed as per the manufacturer's instructions.";

— the manufacturer's installation instructions or a reference to a document held by the manufacturer giving these instructions;

— the date of manufacture (month and year).

© ISO 2021 – All rights reserved

Documents
Document Sharing Hub
Full document details: BS ISO 21927-3:2021

Annex A
(normative)

Criteria to determine the family of fans in order to select the sizes to be tested

A.1 Reduction of numbers of tests for PSHC ventilators forming a product range

It is not usually considered necessary to test every size of ventilator in a family of fans, provided that the following are tested and the family conforms to the rules given in A.3, A.4 and Annex B:

a) the fan with the most highly stressed impeller, and the ventilators with impellers in which the individual stress in any component, weld or fastening is the highest, as appropriate, if not the same (see A.4);

b) for fans with motors mounted in an enclosure which restricts the cooling, the worst case shall be tested; this is the smallest free area of the motor enclosure or the smallest section of exit or entry airway for cooling air;

c) at least two sizes of fans are tested at their highest rotational speed;

d) the fan with the smallest motor frame size to be used, except for fans where the impeller is not mounted on the motor shaft and the motors are out of the airstream in ambient air and the cooling of the motor is not affected by heat transfer from the ventilator or the ventilator construction;

e) if the highest impeller stress levels are determined by geometric similarity conditions from A.4.1, sufficient sizes of fans to ensure that the impeller diameters of the range are from 0,8 to 1,27 of those tested;

f) if the highest impeller stress levels are determined by the calculation methods in A.4.2, sufficient sizes of fans to ensure that the impeller diameters of the range are from 0,63 to 1,27 of those tested;

NOTE The coefficients are taken from Renard Series R20 in accordance with several ISO standards. The aim of the coefficients 0,8 or 0,63 and 1,27 is to validate fans down to 2 or 4 sizes smaller and up to 2 sizes larger than the tested size. See Annex F for more information.

g) for a direct drive axial fan where the blade profile is not symmetrical and the fan may be supplied with motor upstream or motor downstream, the fan shall be tested with motor downstream, which is the worst case;

h) if the fan range is intended to operate only with motor upstream, the tests can be performed in this configuration;

i) if a fan or range of fans is intended for installation in either vertical or horizontal or intermediate positions, a minimum of one fan shall be tested in each of vertical (shaft down and motor downstream or shaft up and motor upstream if the fan range is intended to work only with the motor upstream) and horizontal orientation;

j) if a family of axial fans is also intended to be used for jet fan application, a minimum of one size of fan shall be tested in the jet fan configuration;

k) a fan for use as a jet fan shall be tested completely assembled, with its ancillaries as listed in 5.1 if supplied with the jet fan. A test of the fan with only the inlet side silencer is allowed to qualify a jet fan, unless the jet fan is suspended by the silencers;

© ISO 2021 – All rights reserved
Documents
Document Sharing Hub
Full document details: BS ISO 21927-3:2021

l) for a reversible fan or jet fan, equipped with a symmetrical impeller (symmetrical blade profile or impeller with alternate blades) the test shall be performed with motor downstream;

m) a fan shall be tested with any electrical device used in combination with the motor which could have a negative impact on the motor (e.g. change electrical signal, overheating, etc.);

n) a fan driven by pulse width modulation (PWM) frequency converter at ambient and at high temperature.

The currently well-known impacts of a PWM frequency converter driving on an electric three-phase motor are the following:

— creation of partial discharges through the air voids located inside motor insulation. These discharges are in proportion with the temperature;

— creation of voltage peaks higher than those obtained from direct online supply;

— damage in the windings due to these voltage peaks and voltage gradient (d_u/d_t);

— influence of the cable type/length;

— stray bearing currents.

In order to estimate the final impact of the combination of converter and cable on the motor, it is necessary to measure directly at the motor terminals by means of a suitable instrument (e.g. an oscilloscope), only at ambient temperature for 10 min before the warm up period of the test:

— the maximum peak voltage value, U_p, or peak to peak, $U_{pk}/_{pk}$; and

— the maximum rate of voltage rise, d_u/d_t, of the voltage fluctuations as indicated in Figure A.1 and Formula (A.1):

$$d_u/d_t = (0{,}9\ U_p - 0{,}1\ U_p) / (t_{90} - t_{10}) \quad \text{(A.1)}$$

Refer to IEC 60034-18-41 for more details.

© ISO 2021 – All rights reserved

Documents
Document Sharing Hub
Full document details: BS ISO 21927-3:2021

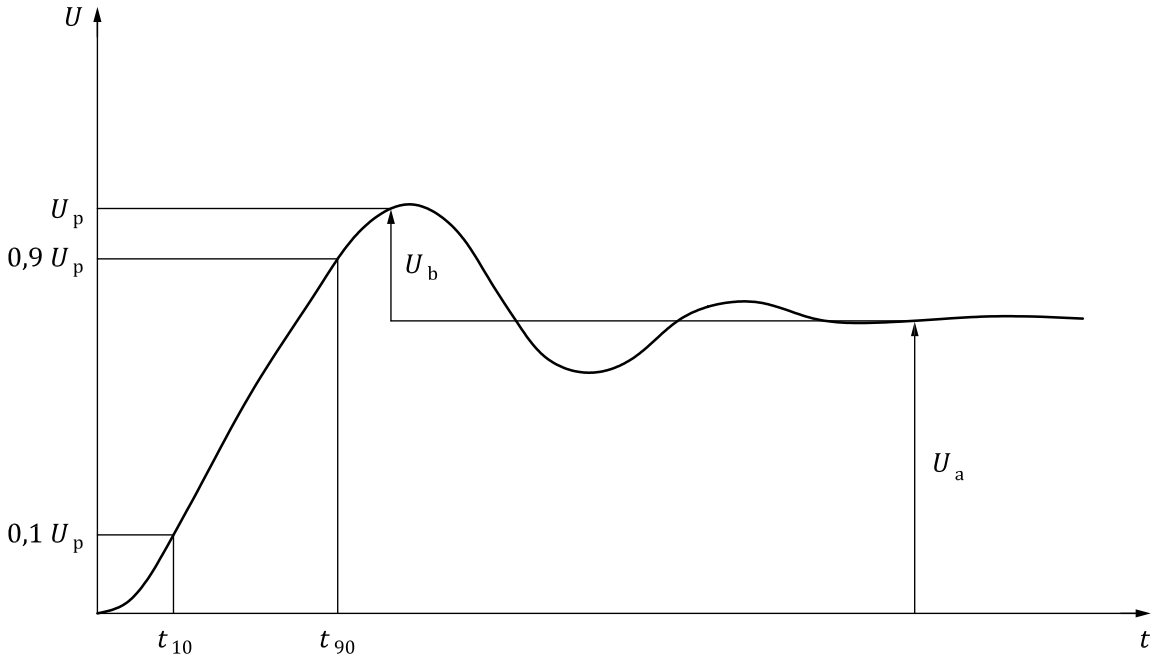

Key

U_a final size of the voltage pulse

U_b value of the peak voltage above the pulse voltage un steady-state condition

Figure A.1 — Voltage curve

© ISO 2021 – All rights reserved

Documents
Document Sharing Hub

Full document details: BS ISO 21927-3:2021

Application of the test results:

The fan unit can be assumed to be able to withstand the same maximum peak to peak voltage values and rate of voltage rise at the motor terminals in an installation as during the test, independent of the pulse width modulation (PWM) frequency converter.

a) Fan driven by PWM frequency converter only at ambient temperature.

   A fan tested directly on line can be installed with a frequency converter, provided the converter is by-passed during smoke and heat exhausting operation, without additional testing.

b) Fan driven by voltage converter (but switched off during smoke exhausting).

   A motor which is supplied from a voltage converter may experience an increased temperature rise when run at a reduced voltage.

   Because of this effect on the temperature rise inside the motor, the warm-up period of the test shall be performed with the output of the voltage converter set to run the motor at 70 % of nominal speed.

   The temperature rise of the motor during this warm up period shall not be greater than one class lower than the insulation class of motor.

c) Fan started by soft starter.

   Since the soft starter is bypassed just after the motor starting, it is not obligatory to test it, especially if the fan manufacturer wants to record both applications (with and without soft starter).

d) Contra-rotating installation.

   Such installation does not require any additional test provided the fan range was tested individually with motor downstream (see Figure A.2).

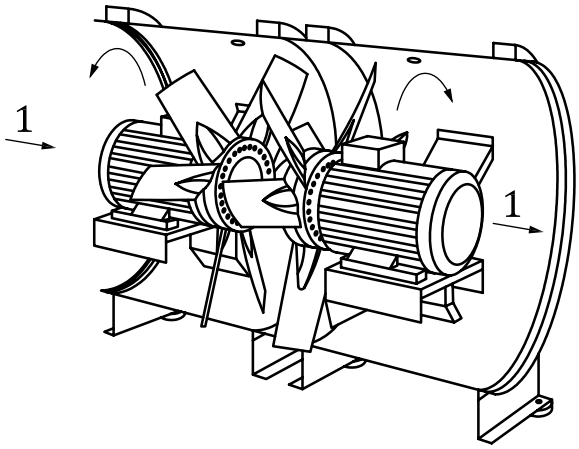

Key

1 air flow

Figure A.2 — Contra-rotating installation

A.2 Motors

A.2.1 General

A family of motors shall only be assessed if the smallest and largest frame size motors used in the family are tested within the fans, at their highest ratings (voltage, power, rotational speed, etc.), except when the impeller is not mounted on the motor shaft and the motors are out of the air stream in ambient

© ISO 2021 – All rights reserved

Documents
Document Sharing Hub
Full document details: BS ISO 21927-3:2021

air and the cooling of the motor is not affected by heat transfer from the ventilator or the ventilator construction (type 1). When the motor is out of the air stream and the impeller is mounted on the motor shaft (type 2), motors from a different supplier to the one used in the ventilator test may be used, provided that the tested and alternative motors are of the same construction, i.e. same class of insulation and bearing type and class of fit and same synchronous speed and rating.

A.2.2 Type 1 motor: Motor out of airstream and impeller not mounted on shaft

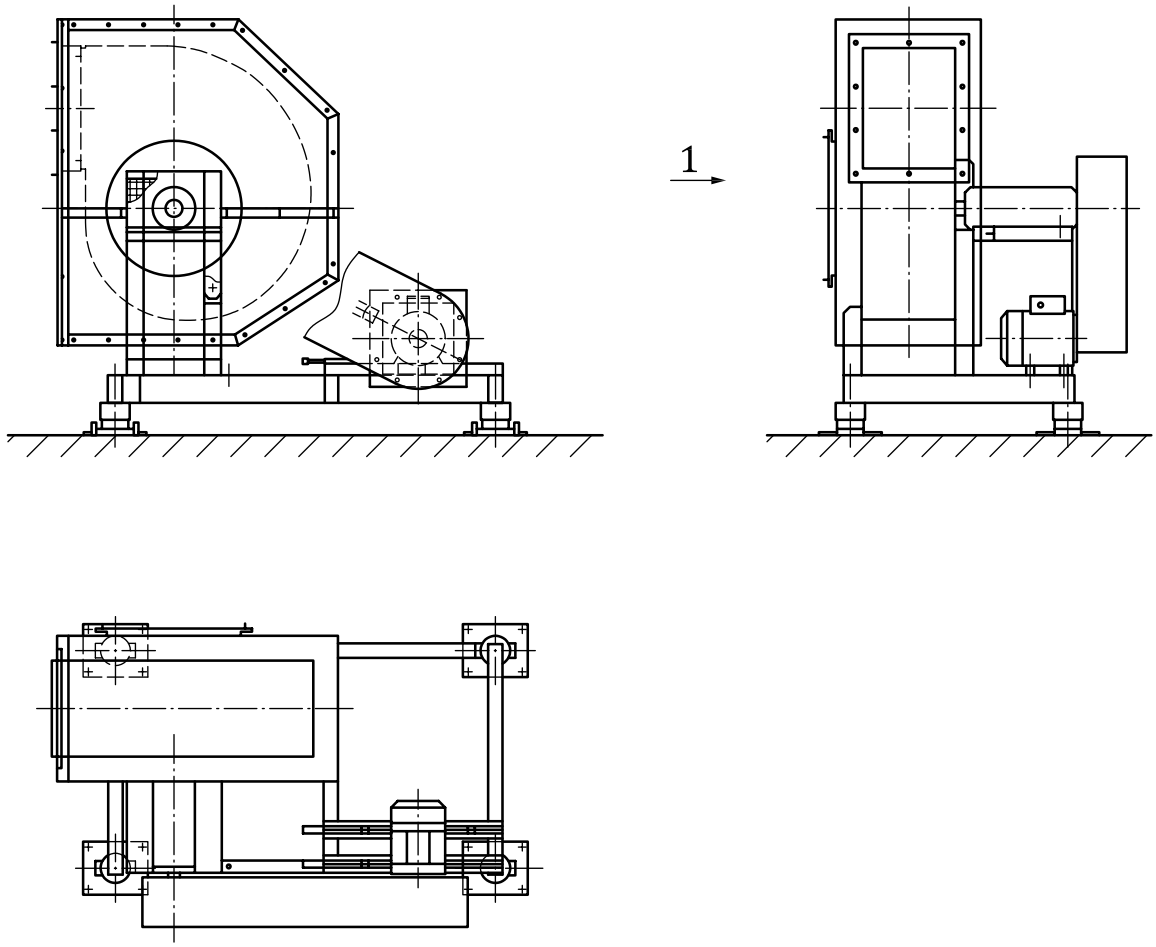

Key

1 air flow

Figure A.3 — Type 1 motor

In this case, Type 1 motors do not need to be approved and there are no requirements, except those described in 4.2.3.

© ISO 2021 – All rights reserved
Documents
Document Sharing Hub
Full document details: BS ISO 21927-3:2021

A.2.3 Type 2 motor: Centrifugal fans with impeller mounted on the motor shaft

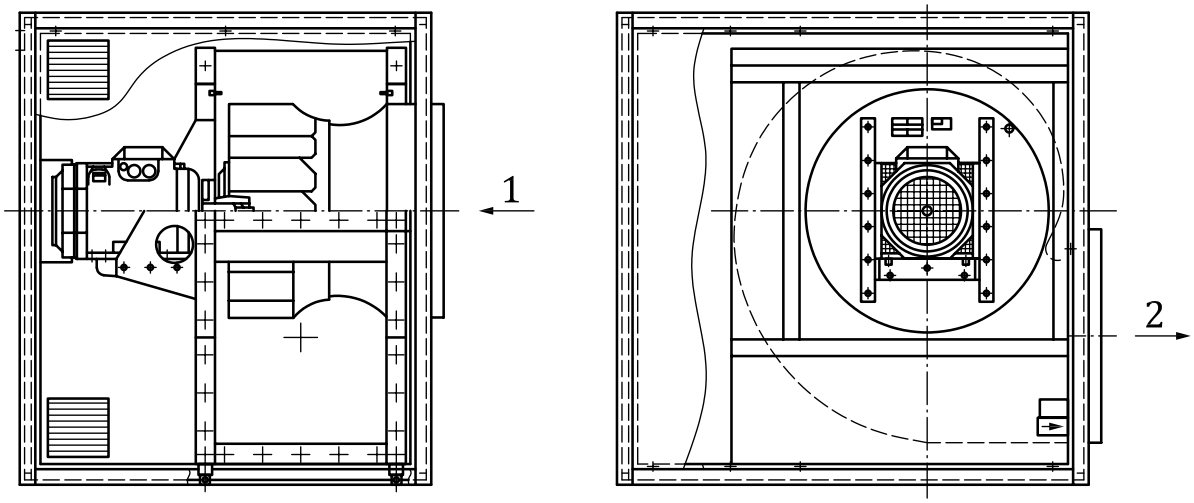

Key

1 air flow (inlet)

2 air flow (outlet)

Figure A.4 — Type 2 motor

Type 2 motors shall be tested.

For interchangeability, the motor winding temperature shall be measured just after the test (according to the resistance measurement method of IEC 60034-1) to ensure that the temperature rise inside the motor is equal to or lower than that permitted for the insulation class. For example, with a standard class F motor, the motor winding temperature rise at the end of the high temperature test shall not exceed the class F requirement, i.e. 105 K.

Where single-phase motors were tested, the above rule for motor interchangeability applies, provided that the alternative capacitor is located at the same place (a plastic capacitor can be replaced by an aluminium capacitor but not vice-versa).

Otherwise, a motor cannot be changed without a new test. If new tests are required, see A.3.

© ISO 2021 – All rights reserved

Documents
Document Sharing Hub
Full document details: BS ISO 21927-3:2021

A.2.4 Type 3 motor: Fans with motor inside the airstream without cooling

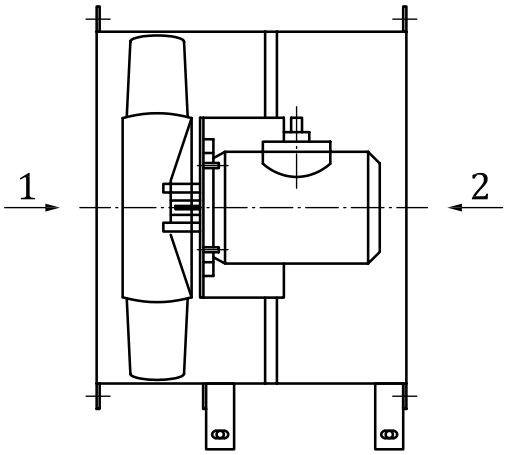

Key

1 airflow 1

2 airflow 2

Figure A.5 — Motor Type 3

Type 3 motors shall be tested and interchangeability is only possible with other motors already tested under specific conditions, see A.3.

A.2.5 Type 4 motor: Motors out of airstream but without fan casing

A.2.5.1 General

Type 4 motor: Fans with insulation class F (temperature rise B) or class H (temperature rise F) standard motors for F_{400} and lower temperature/times classes and motors affected by thermal transfer.

See examples in A.2.5.2 and A.2.5.3.

A.2.5.2 Motor Type 4.1

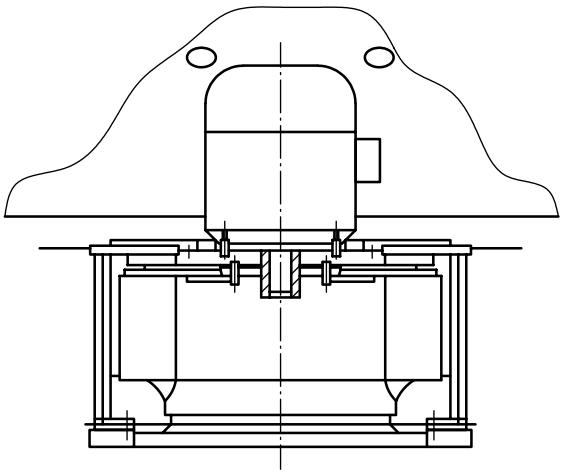

Figure A.6 — Motor Type 4.1

Motors of type 4.1 shall be tested.

© ISO 2021 – All rights reserved
Documents
Document Sharing Hub
Full document details: BS ISO 21927-3:2021

For interchangeability, the motor winding temperature shall be measured just after the test (according to the resistance measurement method of IEC 60034-1) to ensure that temperature rise inside the motor is equal to or lower than that permitted for the insulation class. For example, with a standard class F motor, the motor winding temperature rise at the end of the high temperature test shall not exceed the class F requirement, i.e. 105 K.

Where single-phase motors were tested, the above rule for motor interchangeability applies, provided that the alternative capacitor is located at the same place (a plastic capacitor can be replaced by an aluminium capacitor but not vice-versa).

Otherwise the motor cannot be changed without a new test. If new tests are required, see A.3.

A.2.5.3 Motor Type 4.2

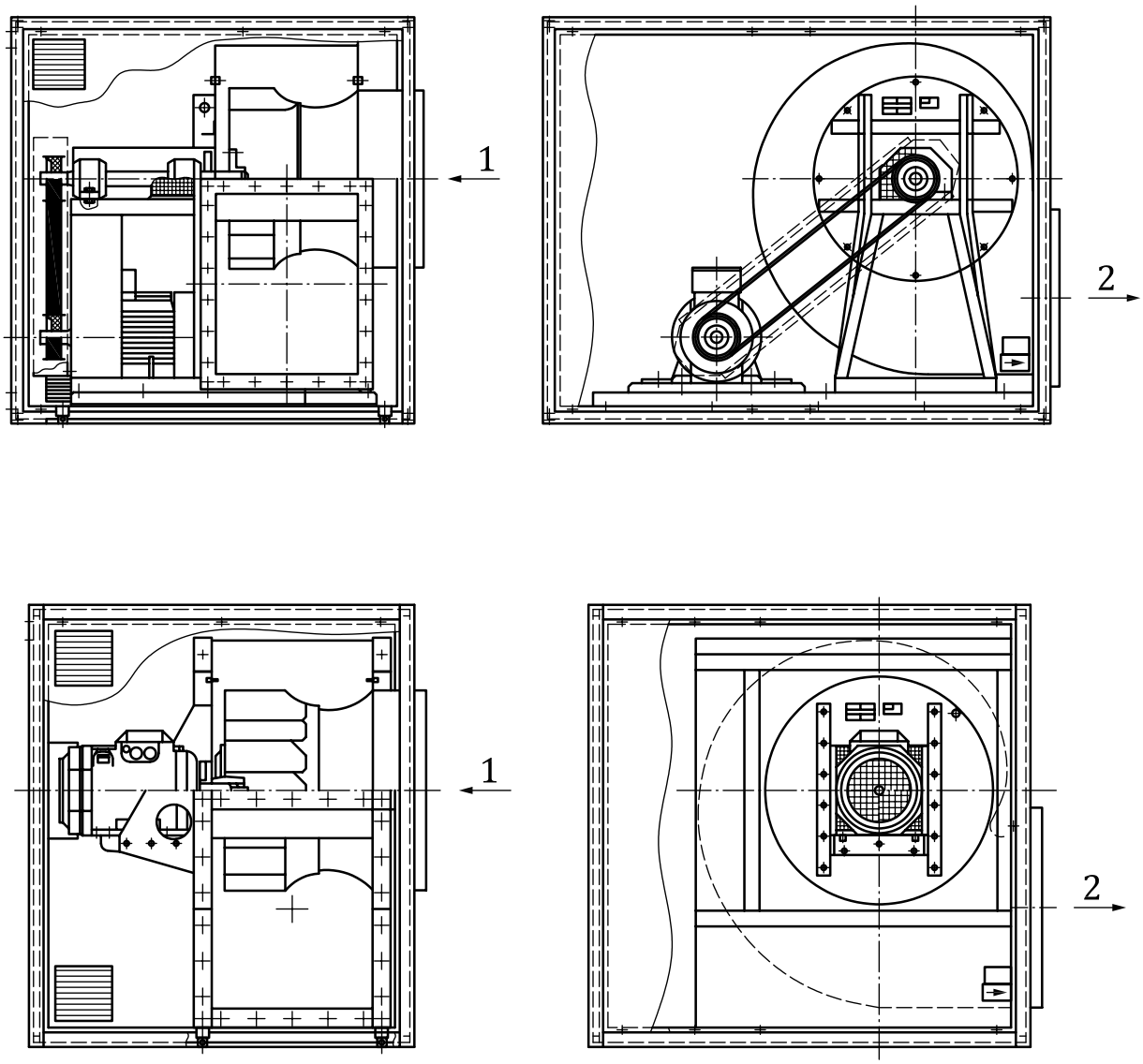

Key

1 input

2 output

Figure A.7 — Motor Type 4.2

Motors of type 4.2 shall be tested.

© ISO 2021 – All rights reserved

Documents
Document Sharing Hub
Full document details: BS ISO 21927-3:2021

For interchangeability, the motor winding temperature shall be measured just after the test (according to the resistance measurement method of EN 60034-1) to ensure that temperature rise inside the motor is equal to or lower than that permitted for the insulation class. For example, with a standard class F motor, the motor winding temperature rise at the end of the high temperature test shall not exceed the class F requirement, i.e. 105 K.

Where single-phase motors are tested, the above rule for motor interchangeability is the same, provided that the alternative capacitor is located at the same place (a plastic capacitor can be replaced by an aluminium capacitor but not vice-versa).

Otherwise, the motor is not permitted to be changed without a new test. If new tests are required, see A.3.

A.3 Combined testing

A.3.1 General rule

To allow the mounting of a new family of motors inside an already tested family of fans, test the smallest and largest frame motor sizes at their highest ratings within fans, provided that the motors are part of the same homogeneous range.

A.3.2 Specific rule for an axial fan

When the family of fans is large, the motor family may consist of two or more homogeneous ranges. This means that for each homogeneous family, both the smallest and largest frame sizes shall be tested (i.e. 4 or more tests).

However, if the alternative motor family was already successfully tested according to Annex D, or within another family of fans, in accordance with the same criteria listed in A.1 and for the same temperature-time classification, only the smallest and largest frame size of the complete motor family shall be retested within the fans (only 2 tests).

EXAMPLE Fan family A tested with motor range X consisting of 2 homogeneous families:

— X1: Frame sizes 80 to 132;

— X2: Frame sizes 160 to 250.

According to Annex B, the frame sizes 80, 132, 160 and 250 were tested during the initial assessment.

A fan manufacturer wants to mount motor family Y consisting of 2 homogeneous families:

— Y1: Frame sizes 90 to 112;

— Y2: Frame sizes 132 to 225.

If Y motors were never tested, tests of 90, 112, 132 and 225 frame sizes motors are carried out.

If Y motors (at least the 90 up to 225 frame sizes range) were successfully tested with a load (according to Annex D) or within a fan family B with the same criteria in accordance with A.1 and for the same temperature-time classification, then only frame sizes 90 and 225 are retested.

A.4 Determination of highest stresses in impellers

A.4.1 PSHC Ventilators with geometrically similar impellers

For geometrically similar impellers, the impeller with the highest peripheral speed is the most highly stressed.

© ISO 2021 – All rights reserved
Documents
Document Sharing Hub
Full document details: BS ISO 21927-3:2021