BS ISO 21940-21:2022

BSI Standards Publication

Mechanical vibration — Rotor balancing

Part 21: Description and evaluation of balancing machines

Documents
Document Sharing Hub

Full document details: BS ISO 21940-21:2022

National foreword

This British Standard is the UK implementation of ISO 21940-21:2022. It supersedes BS ISO 21940-21:2012, which is withdrawn.

The UK participation in its preparation was entrusted to Technical Committee GME/21/5, Vibration of machines, vehicles and structures.

A list of organizations represented on this committee can be obtained on request to its committee manager.

Contractual and legal considerations

This publication has been prepared in good faith, however no representation, warranty, assurance or undertaking (express or implied) is or will be made, and no responsibility or liability is or will be accepted by BSI in relation to the adequacy, accuracy, completeness or reasonableness of this publication. All and any such responsibility and liability is expressly disclaimed to the full extent permitted by the law.

This publication is provided as is, and is to be used at the recipient's own risk.

The recipient is advised to consider seeking professional guidance with respect to its use of this publication.

This publication is not intended to constitute a contract. Users are responsible for its correct application.

© The British Standards Institution 2022
Published by BSI Standards Limited 2022

ISBN 978 0 539 14475 8

ICS 21.120.40

Compliance with a British Standard cannot confer immunity from legal obligations.

This British Standard was published under the authority of the Standards Policy and Strategy Committee on 30 November 2022.

Amendments/corrigenda issued since publication

Date	Text affected

Documents
Document Sharing Hub

Full document details: BS ISO 21940-21:2022

INTERNATIONAL STANDARD

ISO 21940-21

Second edition
2022-11

Mechanical vibration — Rotor balancing —

Part 21: Description and evaluation of balancing machines

Vibrations mécaniques — Équilibrage des rotors —

Partie 21: Description et évaluation des machines à équilibrer

Reference number
ISO 21940-21:2022(E)

Documents
Document Sharing Hub

© ISO 2022

Full document details: BS ISO 21940-21:2022

COPYRIGHT PROTECTED DOCUMENT

© ISO 2022

All rights reserved. Unless otherwise specified, or required in the context of its implementation, no part of this publication may be reproduced or utilized otherwise in any form or by any means, electronic or mechanical, including photocopying, or posting on the internet or an intranet, without prior written permission. Permission can be requested from either ISO at the address below or ISO's member body in the country of the requester.

ISO copyright office
CP 401 • Ch. de Blandonnet 8
CH-1214 Vernier, Geneva
Phone: +41 22 749 01 11
Email: copyright@iso.org
Website: www.iso.org

Published in Switzerland

© ISO 2022 – All rights reserved

Documents
Document Sharing Hub

Full document details: BS ISO 21940-21:2022

Contents

Page

Foreword ... **vi**
Introduction ... **vii**
1 Scope ... **1**
2 Normative references ... **1**
3 Terms and definitions ... **1**
4 Capacity and performance data of the balancing machine ... **1**
4.1 General ... 1
4.2 Data for horizontal balancing machines ... 1
4.2.1 Rotor mass and unbalance limitations ... 1
4.2.2 Production efficiency ... 2
4.2.3 Rotor dimensions ... 3
4.2.4 Balancing machine drive data ... 4
4.2.5 Torque ... 4
4.2.6 Type of rotor drive ... 5
4.2.7 Brake ... 5
4.2.8 Motor and controls ... 5
4.2.9 Speed regulation ... 5
4.2.10 Couple moment interference ratio, I_{sc} ... 5
4.2.11 Air pressure requirements ... 5
4.3 Data for vertical balancing machines ... 5
4.3.1 Rotor mass and unbalance limitations ... 5
4.3.2 Production efficiency ... 6
4.3.3 Rotor dimensions ... 6
4.3.4 Balancing machine drive data ... 8
4.3.5 Torque ... 8
4.3.6 Type of drive to rotor ... 8
4.3.7 Brake ... 8
4.3.8 Motor and controls ... 8
4.3.9 Speed regulation ... 8
4.3.10 Couple moment interference ratio ... 8
4.3.11 Air pressure requirements ... 8
5 Machine features ... **8**
5.1 Principle of operation ... 8
5.2 Machine arrangement ... 8
5.3 Measuring system ... 9
5.3.1 General ... 9
5.3.2 Unbalance indicators ... 9
5.3.3 Additional features ... 9
5.3.4 Operation of the indicating system ... 10
5.4 Plane separation system ... 10
5.4.1 Multi-plane balancing machines ... 10
5.4.2 Single-plane horizontal or vertical balancing machines ... 10
5.5 Setting and calibration of the measuring system ... 10
5.5.1 General ... 10
5.5.2 Soft-bearing machines ... 11
5.5.3 Hard-bearing machines ... 11
6 Production efficiency ... **11**
6.1 General ... 11
6.2 Time per balance cycle ... 12
6.3 Unbalance reduction ratio, R_{UR} ... 13
7 Performance qualifying factors ... **14**

© ISO 2022 – All rights reserved

Documents
Document Sharing Hub
Full document details: BS ISO 21940-21:2022

8 Installation requirements ... **14**
8.1 General ... 14
8.2 Supply requirements ... 14
8.3 Foundation ... 15

9 Proving rotors and test masses ... **15**
9.1 General ... 15
9.2 Standardized proving rotors ... 15
9.3 User defined proving rotors ... 17
9.4 Test masses ... 17
9.4.1 General ... 17
9.4.2 U_{mar} test masses ... 24
9.4.3 R_{UR} test masses ... 25
9.4.4 Permissible test mass errors ... 26
9.4.5 Material ... 27

10 Balance machine verification tests ... **27**
10.1 General ... 27
10.2 Requirements for evaluating balance machine performance ... 28
10.3 Test speed ... 29
10.4 Test for establishing the minimum achievable residual unbalance, U_{mar} ... 29
10.4.1 General ... 29
10.4.2 Initial balancing machine setting ... 29
10.4.3 Unbalance added ... 31
10.4.4 Readings ... 32
10.4.5 Correction ... 32
10.4.6 Reference change ... 32
10.4.7 Plane setting for U_{mar} test ... 32
10.4.8 Test runs ... 32
10.4.9 U_{mar} evaluation ... 32
10.5 Test for unbalance reduction ratio, R_{UR} ... 33
10.5.1 R_{UR} tests on single-plane balancing machines ... 33
10.5.2 R_{UR} tests on two-plane balancing machines ... 33
10.5.3 General ... 33
10.5.4 Test data sheet completion ... 36
10.5.5 Plane setting ... 36
10.5.6 R_{UR} test runs ... 36
10.5.7 Plotting R_{UR} test data ... 37
10.5.8 Evaluation ... 41
10.6 Test for couple moment interference on single-plane machines ... 42
10.6.1 Starting point ... 42
10.6.2 Procedure ... 42
10.6.3 Evaluation ... 42
10.7 Compensator test ... 42
10.7.1 Initial point ... 42
10.7.2 Procedure ... 42
10.7.3 Evaluation ... 43
10.8 Simplified tests ... 43
10.8.1 General ... 43
10.8.2 Simplified U_{mar} test ... 43
10.8.3 Simplified R_{UR} test ... 44

Annex A (informative) **Information provided by the user to the balancing machine manufacturer** ... **45**

Annex B (informative) R_{UR} **limit diagrams** ... **51**

Annex C (informative) **Shafts of outboard Type C proving rotors** ... **54**

Annex D (informative) **User defined proving rotors for special cases including using a user production part** ... **56**

© ISO 2022 – All rights reserved

Documents
Document Sharing Hub
Full document details: BS ISO 21940-21:2022

Annex E (informative) **Modifications to proving rotors prepared in accordance with ISO 2953 to this document** **57**
Annex F (informative) **Optional repeatability test** **59**
Annex G (informative) **Optional speed range test** **61**
Bibliography **62**

© ISO 2022 – All rights reserved

Documents
Document Sharing Hub
Full document details: BS ISO 21940-21:2022

Foreword

ISO (the International Organization for Standardization) is a worldwide federation of national standards bodies (ISO member bodies). The work of preparing International Standards is normally carried out through ISO technical committees. Each member body interested in a subject for which a technical committee has been established has the right to be represented on that committee. International organizations, governmental and non-governmental, in liaison with ISO, also take part in the work. ISO collaborates closely with the International Electrotechnical Commission (IEC) on all matters of electrotechnical standardization.

The procedures used to develop this document and those intended for its further maintenance are described in the ISO/IEC Directives, Part 1. In particular, the different approval criteria needed for the different types of ISO documents should be noted. This document was drafted in accordance with the editorial rules of the ISO/IEC Directives, Part 2 (see www.iso.org/directives).

Attention is drawn to the possibility that some of the elements of this document may be the subject of patent rights. ISO shall not be held responsible for identifying any or all such patent rights. Details of any patent rights identified during the development of the document will be in the Introduction and/or on the ISO list of patent declarations received (see www.iso.org/patents).

Any trade name used in this document is information given for the convenience of users and does not constitute an endorsement.

For an explanation of the voluntary nature of standards, the meaning of ISO specific terms and expressions related to conformity assessment, as well as information about ISO's adherence to the World Trade Organization (WTO) principles in the Technical Barriers to Trade (TBT), see www.iso.org/iso/foreword.html.

ISO 21940-21 was prepared by Technical Committee ISO/TC 108, *Mechanical vibration, shock and condition monitoring*, Subcommittee SC 2, *Measurement and evaluation of mechanical vibration and shock as applied to machines, vehicles and structures*.

This second edition cancels and replaces the first edition (ISO 21940-21:2012), which has been technically revised.

The main changes are as follows:

— the introduction of new computer based technology into balance machine indication systems;

— the introduction of additional tests for repeatability and speed range (see Annex F and Annex G);

— the introduction of greater clarification for use with automated and special purpose machines.

A list of all parts in the ISO 21940 series can be found on the ISO website.

Any feedback or questions on this document should be directed to the user's national standards body. A complete listing of these bodies can be found at www.iso.org/members.html.

© ISO 2022 – All rights reserved
Documents
Document Sharing Hub
Full document details: BS ISO 21940-21:2022

Introduction

The purpose of this document is to provide a common framework for the specification, comparison and evaluation of balancing machines.

It describes a proforma on which the baseline balancing machine characteristics can be presented by the manufacturer enabling users to compare products from different manufacturers. Additionally, guidelines are given on the information by which users provide their data and requirements to a balancing machine manufacturer.

This document describes the tests to be performed during the acceptance testing of a balancing machine and later, on a periodic basis, to ensure that the balancing machine is capable of handling the actual balancing tasks. For periodic tests, simplified procedures are specified.

Methods and requirements for preparing proving rotors (which can be of Type A, Type B or Type C, or a user defined proving rotor e.g. based on a user supplied part) are specified, allowing a wide range of applications to be covered.

The accuracy of all balance machines is inherently non-linear over their mass and speed range. In normal practice, a hard bearing balance machine is calibrated over a particular part of its speed and mass range, but outside that its accuracy cannot be assumed. As a consequence, a rotor specific calibration should be performed to establish the machine accuracy at a specific speed and for a rotor of a particular mass. This is normal practice for soft bearing machines or where the manufacturer states that rotor specific calibration should be carried out.

© ISO 2022 – All rights reserved

Documents
Document Sharing Hub
Full document details: BS ISO 21940-21:2022

Documents
Document Sharing Hub

Mechanical vibration — Rotor balancing —

Part 21: Description and evaluation of balancing machines

1 Scope

This document sets out the requirements for evaluating hard and soft bearing balancing machines that support and rotate:

a) rotors with rigid behaviour at balancing speed (as described in ISO 21940-11);

b) rotors with shaft elastic behaviour and balanced in accordance with low speed balancing procedures (as described in ISO 21940-12).

2 Normative references

The following documents are referred to in the text in such a way that some or all of their content constitutes requirements of this document. For dated references, only the edition cited applies. For undated references, the latest edition of the referenced document (including any amendments) applies.

ISO 21940-2, *Mechanical vibration — Rotor balancing — Part 2: Vocabulary*

3 Terms and definitions

For the purposes of this document, the terms and definitions given in ISO 21940-2 apply.

ISO and IEC maintain terminological databases for use in standardization at the following addresses:

— ISO Online browsing platform: available at https://www.iso.org/obp

— IEC Electropedia: available at https://www.electropedia.org/

4 Capacity and performance data of the balancing machine

4.1 General

The manufacturer shall specify the data listed in 4.2 for horizontal or 4.3 for vertical balancing machines. Information to be provided by the user to the balancing machine manufacturer is summarized in Annex A.

4.2 Data for horizontal balancing machines

4.2.1 Rotor mass and unbalance limitations

The maximum rotor mass, m, which can be balanced, shall be stated over the range of balancing speeds (n_1, n_2, ...).

The maximum moment of inertia of a rotor (given by, $m\,r^2$ where m is the rotor mass and r the radius of gyration) with respect to the shaft axis, which the machine can accelerate in a stated acceleration time, shall be given for the range of balancing speeds (n_1, n_2, ...) together with the corresponding cycle rate (see Table 1, Note 2).

© ISO 2022 – All rights reserved

Documents Document Sharing Hub
Full document details: BS ISO 21940-21:2022

4.2.2 Production efficiency

The production efficiency (further requirements are described in Clause 7) is the total time taken to carry out the individual steps necessary to perform a balance measuring run.

The individual steps to be measured are:

a) time for mechanical adjustment (s);

b) time for setting indicating system (s);

c) time for preparation of rotor (s);

d) acceleration time for a stated rotor (s);

e) time taken for the balance reading to stabilize and for it to be recorded (s);

f) deceleration time for a stated rotor (s);

g) identifying unbalance readings taken (s);

h) any other times to be taken into account for operations to be carried out but not included in 4.2.2 a) to 4.2.2 g) (s).

Total time per measuring run is given by adding the individual times measured in steps 4.2.2 a) to 4.2.2 h) (s).

Table 1 — Horizontal balancing machine data

Manufacturer:		**Model:**					
Balancing speeds or speed ranges			n_1	n_2	n_3	n_4	...
Rotor mass (kg) (see Note 1)		maximum, m_{max}					
		minimum					
Occasional overload force per support (N) (see Note 1)							
Maximum negative force per support (N) (see Note 1)							
Maximum rotor moment of inertia with respect to the shaft axis (kg m^2)							
Cycle rate per hour (see Note 2)							
Maximum unbalance (g mm/kg or g mm) (see Note 3)		measurable					
		permissible					
a) For inboard rotors minimum achievable residual specific unbalance, e_{mar}, (g mm/kg) (see Note 4)	Rotor mass (kg) (see Note 1)	maximum mass, m_{max}					
		0,2 m_{max}					
		minimum mass					
b) For outboard rotors minimum achievable residual specific unbalance, e_{mar}, (g mm/kg) (see Note 4)	Rotor mass (kg) (see Note 1)	maximum mass, m_{max}					
		0,2 m_{max}					
		minimum mass					

NOTE 1 The occasional overload force is only stated for the lowest balancing speed. It is the maximum force per support that can be accommodated by the machine without immediate damage. The negative force is the static upward force resulting from a rotor having its centre of mass outside the bearing support.

NOTE 2 The cycle rate per hour for a given balancing speed is the number of starts and stops, which the machine can perform per hour without damage to the machine when balancing a rotor of the maximum moment of inertia.

NOTE 3 In general, for rotors with rigid behaviour with two planes, the stated value is distributed proportionally to each tolerance plane. For disc-shaped rotors with only one tolerance plane, the full stated value holds for one plane.

NOTE 4 This is the machine's ability to measure the smallest amount of unbalance for a rotor (see 5.5.3).

© ISO 2022 – All rights reserved
Documents
Document Sharing Hub
Full document details: BS ISO 21940-21:2022

4.2.3 Rotor dimensions

General arrangement drawings of the pedestals and other obstructions (e.g. belt-drive mechanism, shroud mounting pads, thrust arms and tie bars) shall be supplied to enable the user to determine the maximum rotor envelope that can be accommodated and the tooling or adaptors required to support and or drive the rotor.

A combination of large journal diameter and high balancing speed can result in an excessive journal peripheral speed. The maximum journal peripheral speed shall be stated.

When belt drive is supplied, balancing speeds shall be stated for both the maximum and minimum diameters over which the belt can drive the rotor.

The manufacturer shall state if the axial position of the drive can be adjusted.

Rotor envelope limitations shall be stated (see Figure 1).

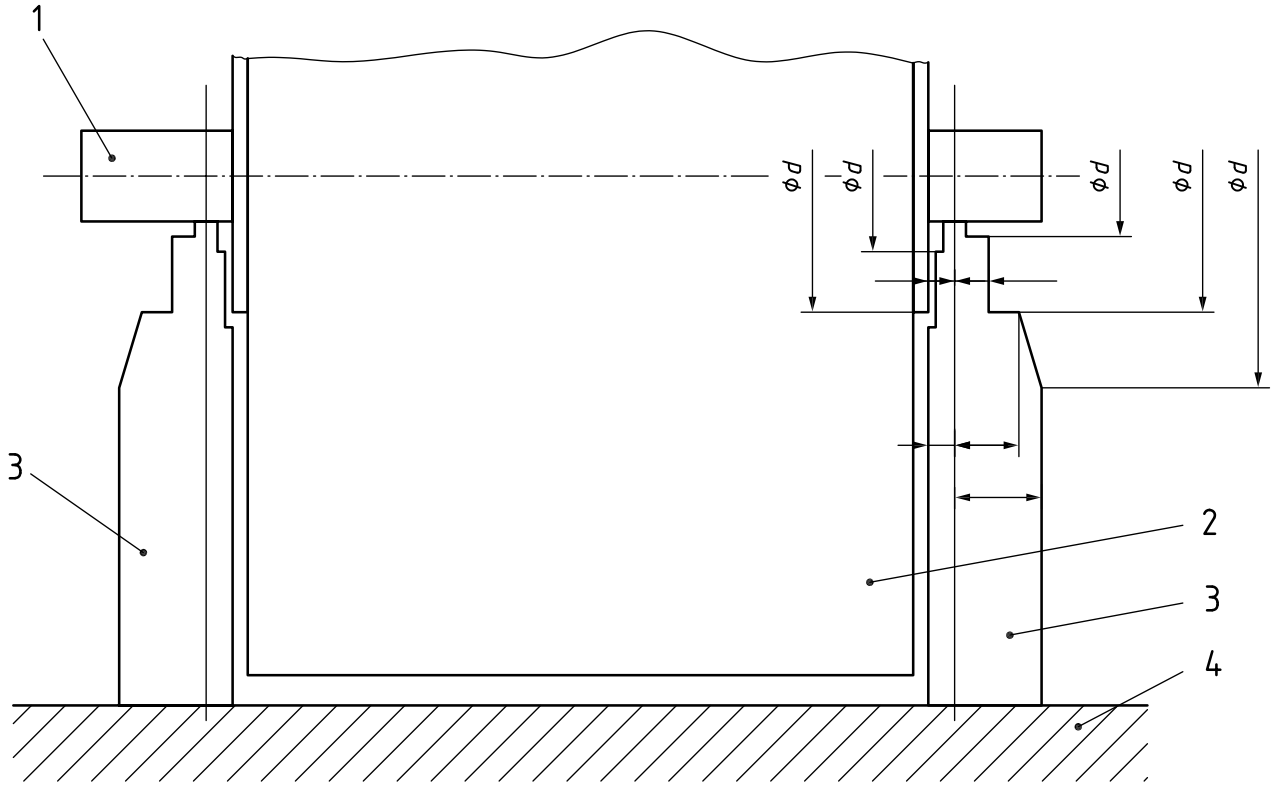

Key

1 shaft
2 rotor
3 supports
4 bed
d diameter

Figure 1 — Example of a machine support drawing, illustrating rotor envelope limitations

If the left-hand support is not a mirror image of the right-hand support, separate dimensions for each shall be shown. All maximum rotor swing diameters shall be dimensioned along with the pedestal widths as indicated in the right hand pedestal.

If applicable, the profile of the belt-drive equipment shall be shown.

© ISO 2022 – All rights reserved

Documents
Document Sharing Hub
Full document details: BS ISO 21940-21:2022

In addition, these dimensions shall be recorded:

a) maximum diameter over bed (mm);

b) maximum diameter over which the belt can drive (mm);

c) minimum diameter over which the belt can drive (mm);

d) distance between journal centrelines:

   1) maximum (mm);

   2) minimum (mm);

   3) maximum distance from coupling flange to centreline of farthest bearing (mm);

   4) minimum distance from coupling flange to centreline of nearest bearing (mm).

e) journal diameter:

   1) maximum (mm);

   2) minimum (mm).

f) maximum permissible peripheral journal speed (m s^{-1});

g) correction plane limitations (consistent with the requirements of 5.4);

h) correction plane interference ratios (consistent with the requirements of 5.4 and based on the proving rotor used).

4.2.4 Balancing machine drive data

Balancing machine drive parameters shall be recorded as shown in Table 2.

Table 2 — Balancing machine drive parameters

	Balancing speed r/min	**Rated torque on motor** N m
n_1		
n_2		
n_3		
n_4		
n_5		
n_6		
n_7		
n_8		
	or steplessly variable	or steplessly variable
from		
to		

4.2.5 Torque

The balancing machine torque parameters to be recorded are

a) zero-speed torque (% of rated torque on rotor),

b) adjustable run-up torque (from …… % to …… % of rated torque on rotor), and

© ISO 2022 – All rights reserved
Documents
Document Sharing Hub
Full document details: BS ISO 21940-21:2022

c) peak torque (% of rated torque on rotor).

In most cases, the maximum torque is required for accelerating a rotor. However, in the case of a rotor with high windage or friction loss, maximum torque can be required at balancing speed. When there is axial thrust, it is necessary that provisions are made to take this into account.

4.2.6 Type of rotor drive

The type of rotor drive shall be recorded (e.g. end drive by band, belt drive, magnetic field, driven bearing rollers, air jet).

In addition, these drive motor parameters shall be recorded:

a) rated power (kW);

b) motor speed (r/min);

c) power supply, voltage (V), frequency (Hz) and phase (single or three phase).

4.2.7 Brake

These brake parameters shall be recorded:

a) type of brake;

b) adjustable braking torque (from …… % to …… % of rated torque on rotor);

c) if the brake can be used as a holding device.

4.2.8 Motor and controls

The standards against which the drive motor and its controls have been manufactured and tested shall be recorded.

4.2.9 Speed regulation

It shall be recorded whether or not motor speed regulation has been incorporated and if it has, what its specifications are (range within …… % of …… r/min, or constant at …… r/min).

4.2.10 Couple moment interference ratio, I_{sc}

The couple moment interference ratio (g mm/(g mm^2)) shall be recorded.

NOTE This value is only applicable for single-plane balancing machines. It describes the influence of couple unbalance in the rotor on the indication of a resultant unbalance.

4.2.11 Air pressure requirements

The air pressure requirements for the balancing machine shall be recorded in Pa and volume flow rate in m^3 s^{-1}.

4.3 Data for vertical balancing machines

4.3.1 Rotor mass and unbalance limitations

The maximum mass of a rotor, m, which can be balanced shall be stated over the range of balancing speeds (n_1, n_2, ...) for the machine.

The maximum moment of inertia of a rotor (given by, $m\,r^2$ where, m, is the rotor mass and, r, is the radius of gyration) with respect to the shaft axis, which the machine can accelerate in a stated acceleration

© ISO 2022 – All rights reserved

AVA Documents Document Sharing Hub
Full document details: BS ISO 21940-21:2022

time, shall be given for the range of balancing speeds (n_1, n_2, ...) together with the corresponding cycle rate (see Table 3).

Table 3 — Vertical balancing machine data

Manufacturer:		**Model:**				
Balancing speeds or speed ranges		n_1	n_2	n_3	n_4	...
Rotor mass (kg) (see Note 1)	maximum, m_{max}					
	minimum					
Occasional overload force per support (N) (see Note 1)						
Maximum rotor moment of inertia with respect to the shaft axis (kg m^2) (see Note 2)						
Cycle rate per hour (see Note 2)						
Maximum unbalance (g mm/kg or g mm) (see Note 3)	measurable					
	permissible					

NOTE 1 The occasional overload force is only stated for the lowest balancing speed. It is the maximum force per support that can be accommodated by the machine without immediate damage.

NOTE 2 Cycle rate per hour for a given balancing speed is the number of starts and stops, which the machine can perform per hour without damage to the machine when balancing a rotor of the maximum moment of inertia.

NOTE 3 In general, for rotors with rigid behaviour with two planes, the stated value is distributed proportionally to each tolerance plane. For disc-shaped rotors with only one tolerance plane, the full stated value holds for one plane.

NOTE 4 This is the machine's ability to measure the smallest amount of unbalance for a rotor (see 5.5.3).

4.3.2 Production efficiency

The production efficiency (further requirements are described in Clause 6) is the total time taken to carry out the individual steps necessary to perform a balance measuring run.

The individual steps to be measured are

a) any mechanical adjustment of the balancing machine needed, including to the drive, tooling or adaptor,

b) preparation of any other devices and systems needed,

c) setting the indicating system,

d) preparation of the rotor for the measuring run,

e) balance cycle acceleration time,

f) reading time (e.g. the total time between the end of the acceleration run and the start of the deceleration run),

g) deceleration time,

h) any further operations necessary to relate the readings obtained to the rotor being balanced,

i) loading and unloading times, and

j) time taken for any other relevant operations to be completed (e.g. safety measures).

4.3.3 Rotor dimensions

If the machine has two or more speeds, the rotor dimensions shall be stated for each speed. If the machine has continuously variable balancing speeds, then the information shall be presented in the form of a table, formula or graph.

© ISO 2022 – All rights reserved
Documents
Document Sharing Hub
Full document details: BS ISO 21940-21:2022

Drawings of the spindle support surface or mounting plate and of any obstructions (e.g. drill heads and electrical control cabinets) above the mounting plate shall be supplied to enable the user to determine the maximum rotor envelope that can be accommodated and the tooling or adaptors required.

In addition, these rotor dimensions shall be recorded:

a) maximum diameter (mm);

b) height:

   1) maximum overall height (mm);

   2) maximum centre of mass height (mm):

      i) at 100 % of maximum mass (mm);

      ii) at 50 % of maximum mass (mm);

      iii) at 25 % of maximum mass (mm).

c) envelope limitations (including machine spindle or mounting plate interface (see Figure 2));

d) correction plane limitations (consistent with the requirements of 5.4).

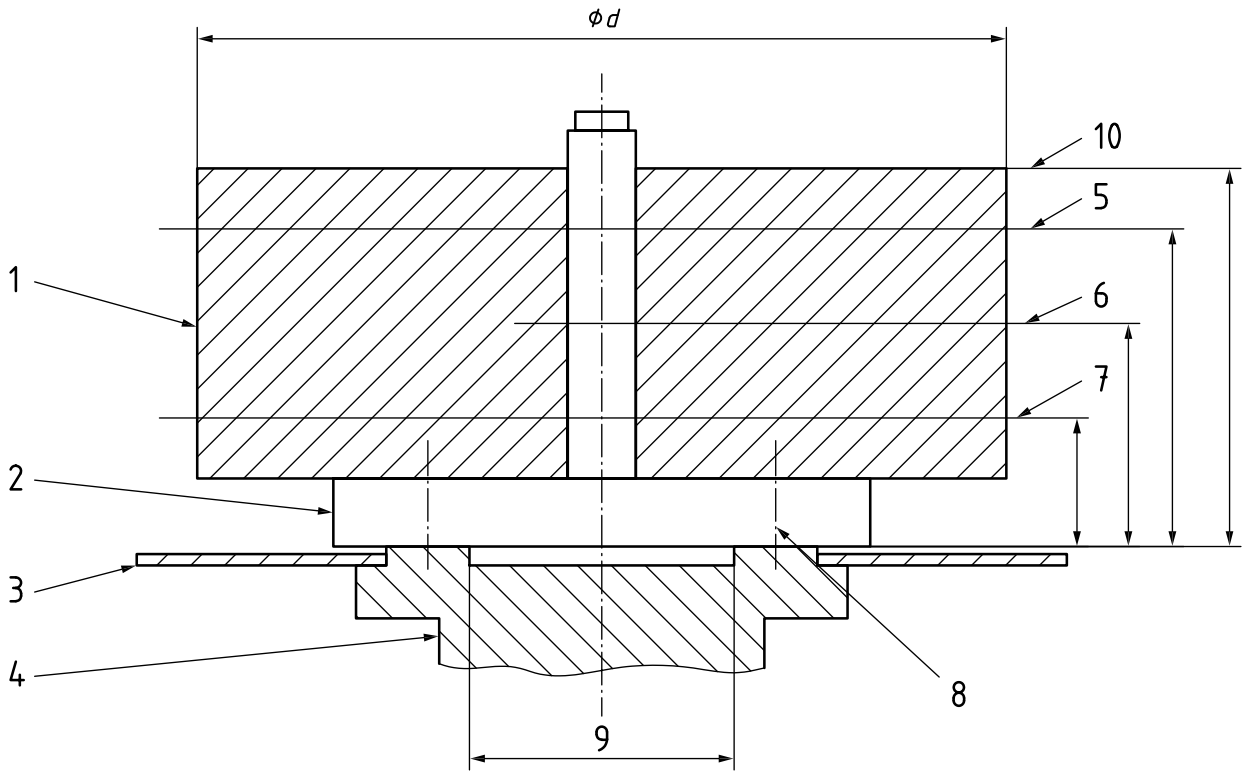

Key

1	rotor	5	upper correction plane	9	spigot diameter
2	adaptor	6	centre of mass plane	10	maximum height above spindle
3	protractor	7	lower correction plane	*d*	diameter
4	spindle	8	mounting holes for adaptor		

Figure 2 — Example of vertical machine mounting interface and rotor envelope

© ISO 2022 – All rights reserved

Documents
Document Sharing Hub
Full document details: BS ISO 21940-21:2022

4.3.4 Balancing machine drive data

Balancing machine drive parameters shall be recorded as shown in Table 2.

4.3.5 Torque

See 4.2.5.

4.3.6 Type of drive to rotor

See 4.2.6.

4.3.7 Brake

See 4.2.7.

4.3.8 Motor and controls

See 4.2.8.

4.3.9 Speed regulation

See 4.2.9.

4.3.10 Couple moment interference ratio

See 4.2.10.

4.3.11 Air pressure requirements

See 4.2.11.

5 Machine features

5.1 Principle of operation

A description of the principle of operation of the balancing machine shall be given (e.g. motion measuring, force measuring).

5.2 Machine arrangement

The manufacturer shall describe the configuration of the balancing machine and its principal design features (e.g. horizontal or vertical axis of rotation, soft or hard bearing suspension system).

In addition, and as applicable, the manufacturer shall provide details of:

a) components designed to support the rotor, for instance:

   1) vee blocks;

   2) open rollers;

   3) plain half bearings;

   4) closed ball, roller or plain bearings;

   5) devices to accommodate rotors in their service bearings;

© ISO 2022 – All rights reserved
Documents
Document Sharing Hub
Full document details: BS ISO 21940-21:2022

6) devices to accommodate complete units.

b) bearing lubrication requirements;

c) for horizontal machines only, the mechanical adjustment and functioning of the means provided to take up axial thrust from the rotor;

d) the type(s) of transducer(s) used to sense unbalance effects;

e) the drive method and the means to control it.

5.3 Measuring system

5.3.1 General

A balancing machine shall have the means to determine the amount of unbalance and its angular location.

The balancing machine manufacturer shall describe the measuring system used in their machine, for instance:

a) whether it is computer based (to include type and size of visual display used, data entry method, software architecture and communication and compatible operating system and PC minimum requirements);

b) whether it is electronically based;

c) the number of unbalance channels included and the phase or encoder inputs included;

d) the type of unbalance pickup used and the signal given.

5.3.2 Unbalance indicators

The manufacturer shall describe the means by which the amount and angle of the unbalance is provided, for instance by using

a) a display showing vectors in polar coordinates,

b) a numerical digital display with number of decimal places and significant digits,

c) any display showing the position and amount of the balance correction(s) needed (e.g. the position, depth and shape of the material to be removed or the position and amount of the material to be added), and

d) a means of displaying any tooling (e.g. a holding device for the rotor under test) compensation needed.

5.3.3 Additional features

Additional features, which influence the functioning of the balancing machine shall be described.

For information, additional features, which can be included in the machine are, but not limited to

a) whether an arbitrary coordinate system is used (e.g. geometric centring),

b) an indication of the unbalance resolved into components (which can be in more than two correction planes),

c) any correction devices installed,

d) any device used to show the position and/or amount of the correction to be applied to the rotor,

© ISO 2022 – All rights reserved

Documents
Document Sharing Hub
Full document details: BS ISO 21940-21:2022

e) whether a suitable output for connection to a computer, network, printer or other peripheral is provided, and

f) any error proofing system(s) installed.

5.3.4 Operation of the indicating system

The manufacturer shall describe the procedure by which readings are obtained, taking into account at least

a) how many runs are required to obtain the unbalance measurements,

b) how the unbalance measurements are displayed,

c) if there are readings retained at the end of the measuring run and if readings from previous runs can be recalled,

d) if readings can be made and displayed in real time during the measurement run, averaged over time,

e) if readings can be made and displayed, as an average, after several runs have been completed, and

f) how the addition or subtraction angle of unbalance is selected.

5.4 Plane separation system

5.4.1 Multi-plane balancing machines

The manufacturer shall state whether plane separation is included and if it is, at least these details shall be provided:

a) how is it operated for single rotors of a type not previously balanced;

b) how is it operated for single rotors, in series, with identical dimensions and masses;

c) the limits of rotor geometry over which plane separation is effective shall be defined with the effectiveness stated on the basis of the correction plane interference ratio, stating:

   1) the ratio of bearing distance to plane distance for which plane separation is effective;

   2) whether either or both correction planes can be between or outside the bearings;

   3) whether the centre of mass can be between or outside the two selected correction planes or bearings.

d) whether the indicator system can also be used to directly measure the resultant and couple unbalances.

5.4.2 Single-plane horizontal or vertical balancing machines

The manufacturer shall state to what extent the machine is able to suppress the effects of the couple moment (see 10.6).

5.5 Setting and calibration of the measuring system

5.5.1 General

The manufacturer shall describe the means of setting and calibrating their machine and the methods provided for evaluating them.

© ISO 2022 – All rights reserved
Documents
Document Sharing Hub
Full document details: BS ISO 21940-21:2022

The manufacturer shall state whether the machine can be set to display any desired unit, whether SI units or unbalance units.

The manufacturer shall state the number of runs required for calibrating the balancing machine

a) for single-plane balancing,

b) for two-plane balancing, and

c) for three or more plane balancing.

The manufacturer shall state the maximum permissible change in speed during calibration and operation.

5.5.2 Soft-bearing machines

The manufacturer shall state how calibration and elimination of cross plane influence is to be accomplished on the first rotor of a particular mass and configuration, whether total or partial recalibration is required when changing the balancing speed and if the calibration factors are stored within the measuring system and can be recalled.

5.5.3 Hard-bearing machines

The manufacturer shall state whether the balancing machine is permanently calibrated and can be set according to the rotor to be balanced, whether it requires re-calibration by the user for different balancing speeds, rotor masses and dimensions and whether these calibration factors are stored within the measuring system and can be recalled.

The minimum achievable residual specific unbalance, e_{mar}, that can be achieved with the balancing machine shall be specified in terms of specific unbalance (g mm/kg). The value of e_{mar} shall be stated for the full range of rotor masses and balancing speeds of the machine.

In achieving the stated e_{mar}, the manufacturer shall consider whether the accuracy of

a) amount indication,

b) angle indication,

c) plane separation, and

d) drive, bearings are adequate for the intended use of the machine.

It should be noted that the stated e_{mar} applies to the balancing machine as delivered. Other variables that can affect the e_{mar} and which may need to be taken into account are:

e) out-of-round journals;

f) excessively heavy or loose adaptors;

g) any other tooling employed by the user.

6 Production efficiency

6.1 General

Production efficiency is the ability of the machine to assist the operator in balancing a rotor to a given residual unbalance in the shortest possible time. It shall be assessed by using a proving rotor or, alternatively, a test rotor specified by the user.

To find the production efficiency for a specific rotor (e.g. the number of pieces per time or the reciprocal of the floor-to-floor time), the time taken per measuring run, the number of runs, the time for loading

© ISO 2022 – All rights reserved

AVA Documents Document Sharing Hub
Full document details: BS ISO 21940-21:2022

and unloading and the unbalance correction shall be taken into account. The number of measuring runs required depends on the average initial unbalance, the specified balance tolerance and the unbalance reduction ratio, R_{UR}.

6.2 Time per balance cycle

For the proving rotor or rotors specified by the user (e.g. mass produced parts) the procedure to be used shall be described in detail and state, where applicable, the average time used for each of the operations.

When any operation is performed by an operator, this shall be noted and any correction time needed stated as averaged or specified criteria (e.g. based on the number and size and depth of holes).

At least these points shall be taken into account when establishing production efficiency:

a) any mechanical adjustment of the balancing machine needed, including to the drive, tooling or adaptor;

b) preparation of any other devices and systems needed;

c) setting the indicating system;

d) preparation of the rotor for the measuring run;

e) balance cycle acceleration time;

f) the reading time (e.g. the total time between the end of the acceleration run and the start of the deceleration run);

g) deceleration time;

h) any further operations necessary to relate the readings obtained to the rotor being balanced;

i) loading and unloading times;

j) time taken for any other relevant operations to be completed (e.g. safety measures).

If special tools, not supplied as part of the standard equipment, are necessary to accommodate a rotor, this shall be specified (e.g. bearing inserts, couplings for drive shafts and shrouds).

For automated machines with many operations that cannot be carried out in series, a timing chart (e.g. as shown in Table 4) may be used to record individual operation and overall times. Timings that vary due to non-controllable influences shall be highlighted and defined (e.g. human intervention).

© ISO 2022 – All rights reserved
Documents
Document Sharing Hub
Full document details: BS ISO 21940-21:2022

Table 4 — Possible timings chart

			Total time taken s																
Sequence	**Operation time** s	**Criteria**	1	2	3	4	5	6	7	8	9	10	11	12	13	14	15	16	etc.
Operator loads part and starts cycle	4	Human																	
Clamp part	1	Machine																	
Measure part diameter and run-out	4	Machine																	
Accelerate	3	Machine																	
Measure unbalance	4	Machine																	
Decelerate	1	Machine																	
Index to correction angle	1	Machine																	
Hydraulic clamp	1	Machine																	
Mill feed to depth	3	3 mm																	
Carry out milling correction	6	120°																	
Unclamp rotary table from spindle	1	Machine																	
Accelerate	1	Machine																	
Measure	4	Machine																	
Decelerate	1	Machine																	
Orientate spindle for next part	1	Machine																	
Unclamp	1	Machine																	
Operator unloads part	4	Human																	

6.3 Unbalance reduction ratio, R_{UR}

The manufacturer shall state the R_{UR} for the machine that shall include R_{UR} percentage for both inboard and outboard rotors.

It is assumed in stating the R_{UR} that the addition or subtraction of mass is made without error and in accordance with the operating instructions for the balancing machine.

© ISO 2022 – All rights reserved

Documents
Document Sharing Hub
Full document details: BS ISO 21940-21:2022