BS ISO 22343-1:2023
Incorporating corrigendum January 2024

BSI Standards Publication

Security and resilience — Vehicle security barriers

Part 1: Performance requirement, vehicle impact test method and performance rating

Documents
Document Sharing Hub

Full document details: BS ISO 22343-1:2023

National foreword

This British Standard is the UK implementation of ISO 22343-1:2023. It supersedes PAS 68:2013, which is withdrawn.

The UK participation in its preparation was entrusted to Technical Committee GW/3, Private Security Management & Services.

A list of organizations represented on this committee can be obtained on request to its committee manager.

Contractual and legal considerations

This publication has been prepared in good faith, however no representation, warranty, assurance or undertaking (express or implied) is or will be made, and no responsibility or liability is or will be accepted by BSI in relation to the adequacy, accuracy, completeness or reasonableness of this publication. All and any such responsibility and liability is expressly disclaimed to the full extent permitted by the law.

This publication is provided as is, and is to be used at the recipient's own risk.

The recipient is advised to consider seeking professional guidance with respect to its use of this publication.

This publication is not intended to constitute a contract. Users are responsible for its correct application.

© The British Standards Institution 2024
Published by BSI Standards Limited 2024

ICS 93.080.30

Compliance with a British Standard cannot confer immunity from legal obligations.

This British Standard was published under the authority of the Standards Policy and Strategy Committee on 30 September 2023.

Amendments/corrigenda issued since publication

Date	Text affected
31 January 2024	Correction to supersession details in national foreword

Documents
Document Sharing Hub

Full document details: BS ISO 22343-1:2023

INTERNATIONAL STANDARD

ISO 22343-1

First edition
2023-09

Security and resilience — Vehicle security barriers —

Part 1: Performance requirement, vehicle impact test method and performance rating

Sécurité et résilience — Barrières de sécurité pour véhicules —

Partie 1: Exigence de performance, méthode d'essai d'impact de véhicule et évaluation des performances

Reference number
ISO 22343-1:2023(E)

Documents
Document Sharing Hub

© ISO 2023

Full document details: BS ISO 22343-1:2023

COPYRIGHT PROTECTED DOCUMENT

© ISO 2023

All rights reserved. Unless otherwise specified, or required in the context of its implementation, no part of this publication may be reproduced or utilized otherwise in any form or by any means, electronic or mechanical, including photocopying, or posting on the internet or an intranet, without prior written permission. Permission can be requested from either ISO at the address below or ISO's member body in the country of the requester.

ISO copyright office
CP 401 • Ch. de Blandonnet 8
CH-1214 Vernier, Geneva
Phone: +41 22 749 01 11
Email: copyright@iso.org
Website: www.iso.org

Published in Switzerland

© ISO 2023 – All rights reserved

Documents
Document Sharing Hub

Full document details: BS ISO 22343-1:2023

Contents

Page

Foreword ... **iv**

1 Scope ... **1**

2 Normative references ... **1**

3 Terms and definitions ... **2**

4 VSB performance requirement ... **13**

5 VSB documentation ... **14**
5.1 General ... 14
5.2 Conformity between VSB and documentation ... 15

6 Test method ... **15**
6.1 Apparatus ... 15
6.2 Test site ... 22
6.3 Target impact point, initial contact point and impact angle ... 22
6.3.1 Target impact point ... 22
6.3.2 Initial contact point ... 23
6.3.3 Impact angle ... 23
6.4 VSB preparation ... 23
6.4.1 General ... 23
6.4.2 Installation ... 23
6.4.3 Foundation ... 24
6.4.4 Soil ... 25
6.4.5 Markers ... 25
6.5 Test vehicle preparation ... 25
6.5.1 General ... 25
6.5.2 Test vehicle dimensions ... 25
6.5.3 Vehicle condition ... 25
6.5.4 Ballast ... 26
6.5.5 Reference points ... 26
6.5.6 Occupant injury ... 26
6.6 Impact speed ... 26
6.7 Test procedure ... 27
6.7.1 Pre-impact data ... 27
6.7.2 Impact ... 30
6.7.3 Impact data ... 30
6.7.4 Post-impact data ... 30
6.7.5 Disposal of the test vehicle ... 32
6.8 Test report ... 32
6.8.1 General ... 32
6.8.2 Summary of results ... 34

7 Performance rating ... **35**
7.1 General ... 35
7.2 Classification code ... 35

8 Product information ... **36**

Annex A (normative) **Test vehicle specification measurements** ... **37**

Annex B (informative) **Example of product and foundation drawings to be submitted to the test house** ... **46**

Annex C (informative) **Determination of post-impact access** ... **50**

Annex D (informative) **Post-impact measurements of foundation and VSB** ... **52**

Bibliography ... **55**

Documents
Document Sharing Hub

© ISO 2023 – All rights reserved

Full document details: BS ISO 22343-1:2023

Foreword

ISO (the International Organization for Standardization) is a worldwide federation of national standards bodies (ISO member bodies). The work of preparing International Standards is normally carried out through ISO technical committees. Each member body interested in a subject for which a technical committee has been established has the right to be represented on that committee. International organizations, governmental and non-governmental, in liaison with ISO, also take part in the work. ISO collaborates closely with the International Electrotechnical Commission (IEC) on all matters of electrotechnical standardization.

The procedures used to develop this document and those intended for its further maintenance are described in the ISO/IEC Directives, Part 1. In particular, the different approval criteria needed for the different types of ISO document should be noted. This document was drafted in accordance with the editorial rules of the ISO/IEC Directives, Part 2 (see www.iso.org/directives).

ISO draws attention to the possibility that the implementation of this document may involve the use of (a) patent(s). ISO takes no position concerning the evidence, validity or applicability of any claimed patent rights in respect thereof. As of the date of publication of this document, ISO had not received notice of (a) patent(s) which may be required to implement this document. However, implementers are cautioned that this may not represent the latest information, which may be obtained from the patent database available at www.iso.org/patents. ISO shall not be held responsible for identifying any or all such patent rights.

Any trade name used in this document is information given for the convenience of users and does not constitute an endorsement.

For an explanation of the voluntary nature of standards, the meaning of ISO specific terms and expressions related to conformity assessment, as well as information about ISO's adherence to the World Trade Organization (WTO) principles in the Technical Barriers to Trade (TBT), see www.iso.org/iso/foreword.html.

This document was prepared by Technical Committee ISO/TC 292, *Security and resilience*.

This first edition cancels and replaces IWA 14-1:2013, which has been technically revised.

The main changes are as follows:

— this document has been brought into line with modern technology and practices;

— all figures have been reviewed and surface-placed barriers have been explicitly identified;

— additional reporting of furthest part of vehicle beyond vehicle security barrier datum;

— there has been a general review of all text and structure to provide clarification to test houses and other interested parties.

A list of all parts in the ISO 22343 series can be found on the ISO website.

Any feedback or questions on this document should be directed to the user's national standards body. A complete listing of these bodies can be found at www.iso.org/members.html.

© ISO 2023 – All rights reserved
Documents
Document Sharing Hub
Full document details: BS ISO 22343-1:2023

Security and resilience — Vehicle security barriers —

Part 1: Performance requirement, vehicle impact test method and performance rating

1 Scope

This document specifies impact performance requirements for a vehicle security barrier (VSB) and a test method for rating its performance when subjected to a single impact by a test vehicle not driven by a human being. It is applicable to test methods for vehicle penetration distances not exceeding 25 m.

This document is applicable to all manufacturers and procurers of VSBs, where they are used to protect people in any public or private location from the impact of vehicle attacks.

This document does not apply to the performance of a VSB or its control apparatus when subjected to:

— slow speed encroachment;

— slow speed nudging and ramming;

— blast explosion;

— ballistic impact;

— manual attack, with the aid of the vehicle (multiple impacts at slow speed);

— manual attack, with the aid of tools (excluding vehicles);

— electrical manipulation;

— attack on the control systems by any means.

NOTE 1 For manual attack, a variety of test methods exist. For assessing intruder resistance of building components, see LPS 1175[6].

NOTE 2 The VSB is designed and tested on the basis of:

a) vehicle type, mass and speed of the assessed vehicle-borne threat;

b) its geographical application (e.g. climate conditions);

c) intended site location (e.g. rigid or non-rigid soil/finished surface).

It does not apply to guidance on design, the operational suitability of a VSB or other impact test methods.

NOTE 3 Guidance on the selection and specification of a VSB by type and operational suitability is given in ISO 22343-2.

2 Normative references

The following documents are referred to in the text in such a way that some or all of their content constitutes requirements of this document. For dated references, only the edition cited applies. For undated references, the latest edition of the referenced document (including any amendments) applies.

ISO 22300, *Security and resilience — Vocabulary*

© ISO 2023 – All rights reserved

Documents
Document Sharing Hub
Full document details: BS ISO 22343-1:2023

ASTM C31/C31M, *Standard practice for making and curing concrete test specimens in the field*

ASTM C39/C39M–18, *Standard test method for compressive strength of cylindrical concrete specimens*

EN 12390-2, *Testing hardened concrete — Part 2: Making and curing specimens for strength tests*

EN 12390-3, *Testing hardened concrete — Part 3: Compressive strength of test specimens*

SAE J211/2, *Instrumentation for Impact Test — Part 2: Photographic Instrumentation*

3 Terms and definitions

For the purposes of this document, the terms and definitions given in ISO 22300 and the following apply.

ISO and IEC maintain terminology databases for use in standardization at the following addresses:

— ISO Online browsing platform: available at https://www.iso.org/obp

— IEC Electropedia: available at https://www.electropedia.org/

3.1
vehicle security barrier
VSB
passive, active, portable or linear barrier used to prevent potentially hostile vehicular access to a site

Note 1 to entry: Types of VSB and their application are discussed in ISO 22343-2.

3.2
vehicle security barrier foundation
VSB foundation
foundation and surrounding test location ground into which the *VSB* (3.1) is installed

Note 1 to entry: Typical foundations that can be presented for test are illustrated in Figure 1.

© ISO 2023 – All rights reserved
Documents
Document Sharing Hub
Full document details: BS ISO 22343-1:2023

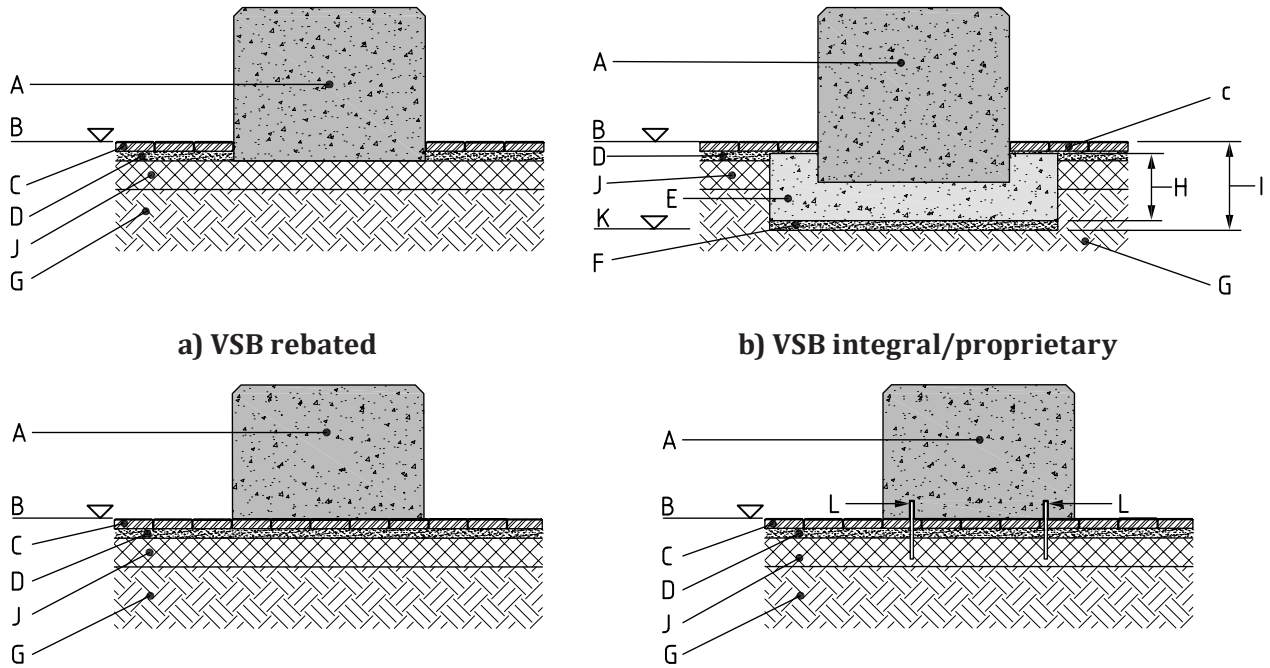

a) VSB rebated

b) VSB integral/proprietary

c) VSB on test site ground (surface placed)

d) VSB anchored/pinned/bolted to test site ground

Key

A	VSB	G	natural ground
B	existing finishing level	H	foundation thickness
C	paviors	I	depth of foundation excavation
D	pavior bedding	J	base construction
E	foundation	K	formation level
F	blinding concrete	L	connections

Figure 1 — Examples of VSB installations — Section view

3.2.1
integral vehicle security barrier foundation
integral VSB foundation
VSB foundation (3.2) that is a structural component of the *VSB* (3.1)

3.2.2
proprietary vehicle security barrier foundation
proprietary VSB foundation
VSB foundation (3.2) designed and sized solely for use with a specific *VSB* (3.1)

Note 1 to entry: A surface pinned VSB can need a concrete plinth into which fixings can be installed, this plinth should be recorded as part of the VSB foundation.

3.2.3
test site ground
surrounding land, in which the vehicle security barrier (VSB) foundation is situated or placed on which the VSB is installed for testing

© ISO 2023 – All rights reserved

Documents
Document Sharing Hub
Full document details: BS ISO 22343-1:2023

3.3
test vehicle
commercially available vehicle and load bed

Note 1 to entry: The vehicle having an unmodified chassis and unmodified frontal structure, used in an impact test to evaluate the performance of a VSB (see Table 2).

Note 2 to entry: Modifications that are permissible include the addition of a load bed (in accordance with the vehicle manufacturer's instructions) and methods to restrain movement of ballast.

Note 3 to entry: See Table 2 for test vehicle type and test mass

3.3.2
ballast
mass added to the test vehicle to bring the test vehicle mass within tolerance

Note 1 to entry: Table 1 specifies the permissible quantities of secured and unsecured ballast.

3.3.3
crew cab
four-door compartment of an N1G vehicle for driver and passengers

3.3.4
day cab
driver compartment of an N1 vehicle that does not include overnight facilities

3.3.5
unladen mass
mass of test vehicle, excluding *ballast* (3.3.2) but with manufacturer's equipment, quantities of engine oil and coolant, and minimum amount of fuel

Note 1 to entry: A minimum amount of fuel is required to ensure engine operation during the test which in turn facilitates power steering and braking systems.

3.4
datum
fixed point or line to where all measurements pre- and post-impact are taken

3.4.1
vehicle datum point
fixed point on a vehicle to where all measurements pre and post impact are taken

Note 1 to entry: For a car (M1) or 4x4 crew cab pick-up (N1G) vehicle [see Figure 2 a) and Figure 2 b)], a reference line passing through the centre of the A-pillars, at the lowest point of the windscreen. For N1, N2 or N3 vehicles [see Figure 2 c), Figure 2 d) and Figure 2 e)],], a reference line intersecting the lower load bed leading edge and the vehicle chassis rail.

© ISO 2023 – All rights reserved
Documents
Document Sharing Hub
Full document details: BS ISO 22343-1:2023

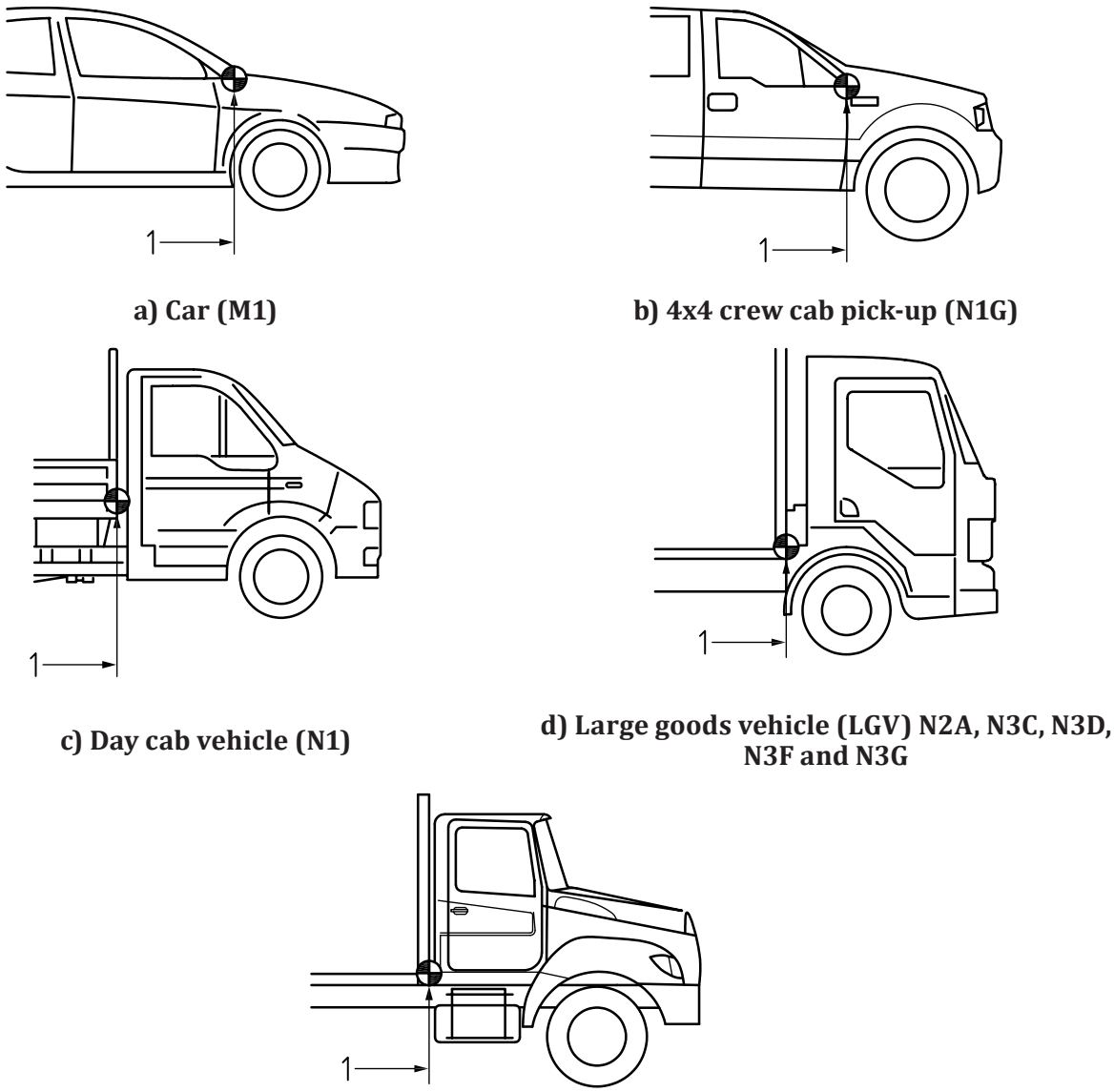

a) Car (M1)

b) 4x4 crew cab pick-up (N1G)

c) Day cab vehicle (N1)

d) Large goods vehicle (LGV) N2A, N3C, N3D, N3F and N3G

e) Large goods vehicle (LGV) N2B and N3E

Key

1 vehicle datum point

Figure 2 — Vehicle datum point — Side view

3.4.2
vehicle security barrier datum line
VSB datum line
horizontal line marked on the ground pre-impact, vertically aligned with the foremost point of the *vehicle security barrier (VSB)* (3.1) structure designed to withstand the impact

Note 1 to entry: The VSB front face can be flat and perpendicular to the ground. In this case, the whole VSB front face is in line with the VSB datum line. In the case of a blocker, it is the furthest protrusion of the VSB structure designed to withstand the impact [see Figure 3 e)].

Note 2 to entry: The front face of the VSB is not the same as the front face of the VSB foundation or any supporting structure. In the case of a ditch, it is the point where the front face of the ditch meets the ground level.

Note 3 to entry: The VSB datum line is illustrated in Figure 3.

© ISO 2023 – All rights reserved

Documents
Document Sharing Hub
Full document details: BS ISO 22343-1:2023

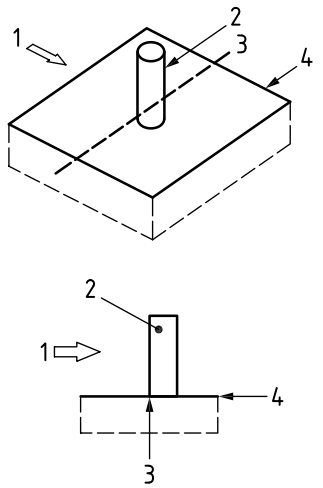

a) Bollard

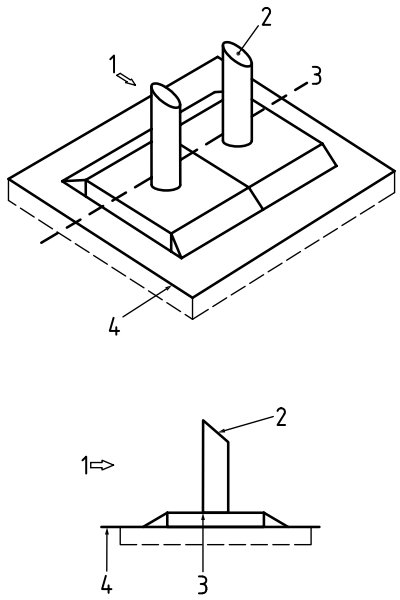

b) Surface-placed bollard

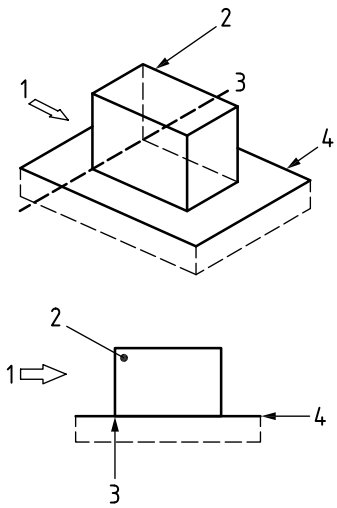

c) Planter, wall, balustrade

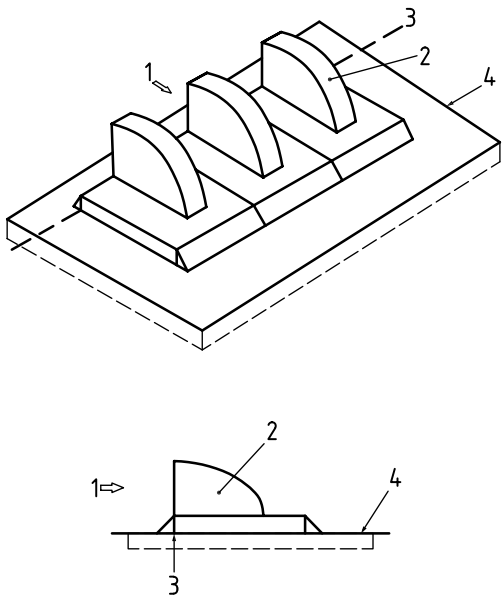

d) Surface-placed barrier

© ISO 2023 – All rights reserved

Documents
Document Sharing Hub

Full document details: BS ISO 22343-1:2023

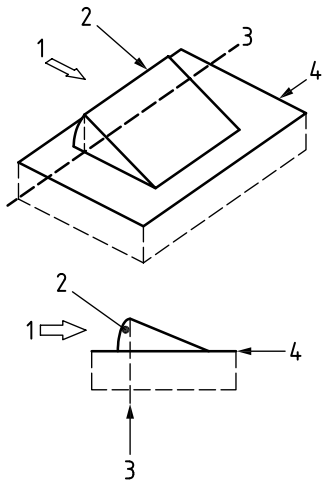

e) Blocker

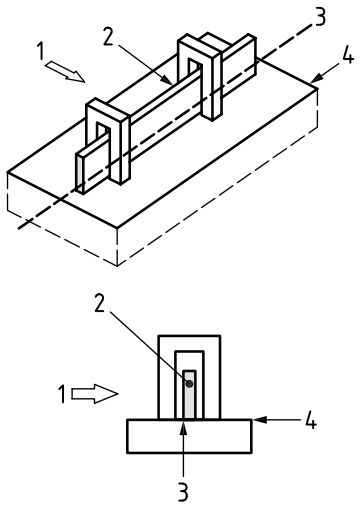

f) Gate barrier, rising/swing arm barrier

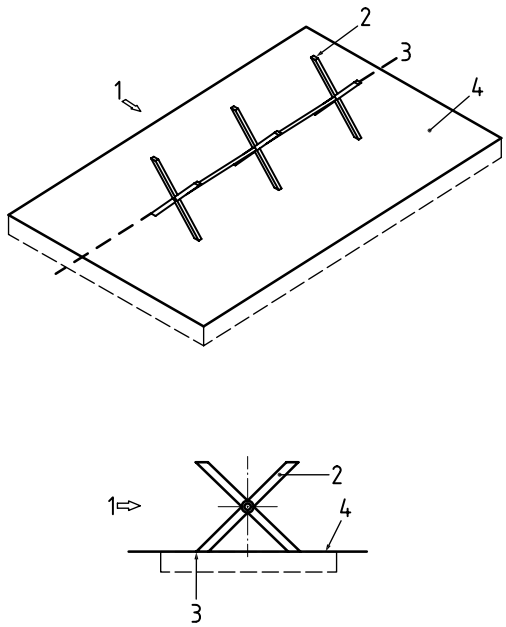

g) Surface-placed barrier

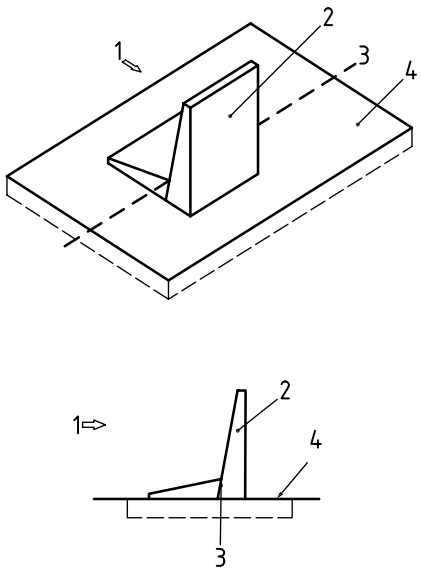

h) Surface-placed barrier

© ISO 2023 – All rights reserved

Documents
Document Sharing Hub
Full document details: BS ISO 22343-1:2023

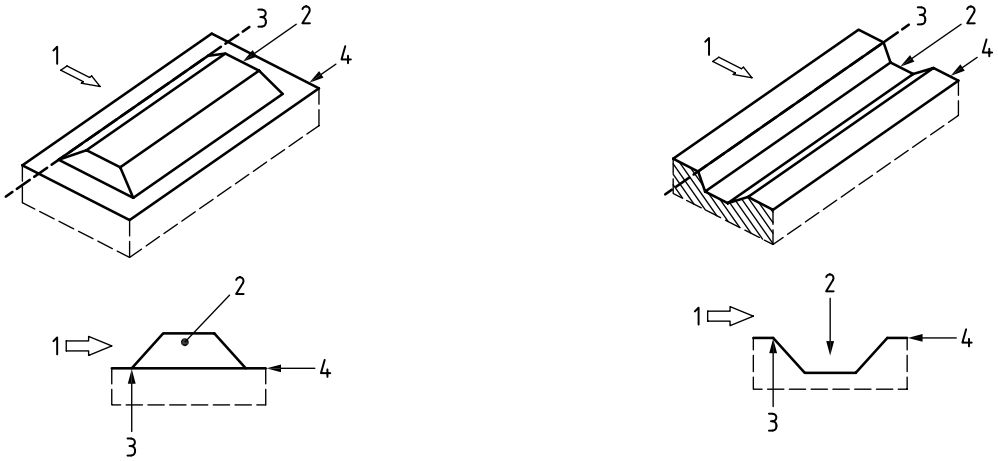

i) Bund/berm **j) ditch**

Key

1	direction of impact	3	VSB datum line
2	VSB	4	ground level

NOTE 1 ISO 22343-2 provides information on the different types of VSB available.

NOTE 2 For e), refer to Note 1 in 3.4.2.

Figure 3 — Examples of VSB datum line — Isometric and side view

3.5
impact
sequence of events between a moving vehicle engaging with a *vehicle security barrier (VSB)* (3.1)

3.5.1
impact speed
velocity of the freely moving test vehicle before reaching the initial contact point

3.5.2
impact angle
angle >0° and ≤ 90° in the horizontal plane between the *vehicle security barrier (VSB) datum line* (3.4.2) and the vehicle approach path into the *VSB* (3.1)

Note 1 to entry: The impact angle is illustrated for clarity in Figure 4.

© ISO 2023 – All rights reserved
Documents
Document Sharing Hub
Full document details: BS ISO 22343-1:2023

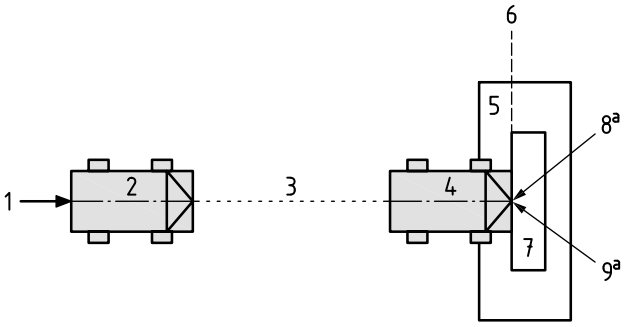

a) Impact angle = 90°

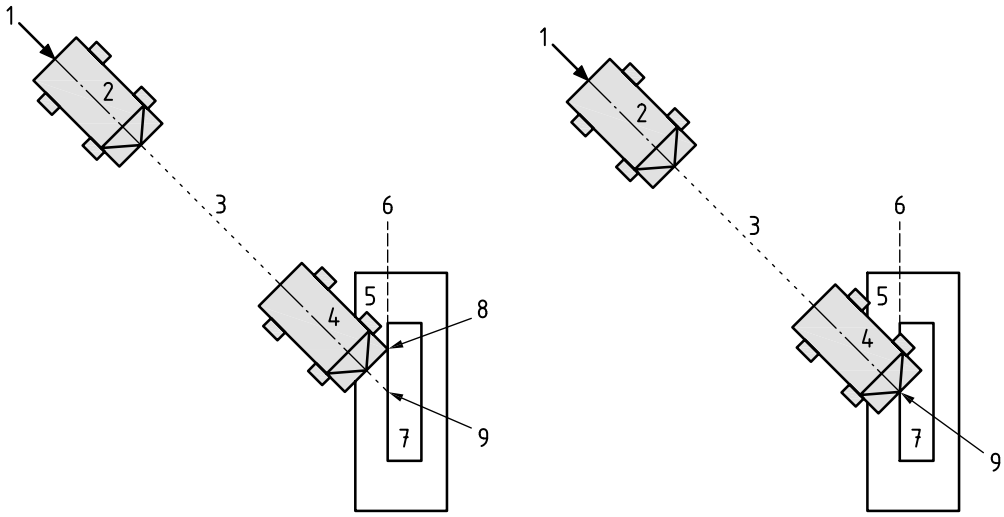

b) Impact angle = 45°

Key

1 centre line of the test vehicle
2 test vehicle, pre-impact
3 vehicle approach path
4 test vehicle at impact
5 VSB foundation/test surface
6 VSB datum line (impact face)
7 VSB
8 initial contact point
9 target impact point

[a] For an impact test with a 90° impact angle, the target impact point and initial contact point are the same.

Figure 4 — Impact angle, target impact point and initial contact point — Aerial view

3.5.3
target impact point
intersection between the longitudinal centre line of the test vehicle and the lateral position on the *vehicle security barrier (VSB)* (3.1) impact face

Note 1 to entry: The target impact point is illustrated for clarity in Figure 4 and is used to determine test vehicle to VSB alignment for impact angles > 45°. For an impact test with a 90° impact angle, the target impact point and the initial contact point are the same.

3.5.4
initial contact point
location of the interface between the test vehicle and *vehicle security barrier (VSB)* (3.1) impact face at moment of impact

Note 1 to entry: The initial contact point is illustrated for clarity in Figure 4 and is used to determine test vehicle to VSB alignment for impact angles ≤ 45°.

© ISO 2023 – All rights reserved

Documents
Document Sharing Hub
Full document details: BS ISO 22343-1:2023

3.6
data
record of information gathered pre-impact, during impact and post-impact between the test vehicle and *vehicle security barrier* (3.1)

3.6.1
vehicle penetration distance
maximum perpendicular distance between the *vehicle security barrier (VSB) datum line* (3.4.2) and either:

a) where there is < 90° yaw and/or pitch of the *test vehicle* (3.3), the *vehicle datum point* (3.4.1); or

b) where there is ≥ 90° yaw and/or pitch of the test vehicle, the furthest part of the load bed (for N1, N_2 and N3 vehicles) or furthest part of the vehicle (M1 and N1G vehicles), achieved either dynamically (during impact) or statically (post-impact), whichever is the greater

Note 1 to entry: Vehicle penetration distance is illustrated in Figure 5 a) and Figure 6 with < 90° yaw and/or pitch of the test vehicle.

Note 2 to entry: Vehicle penetration distance is illustrated in Figure 5 b) (aerial view) with ≥ 90° yaw and/or pitch of the test vehicle.

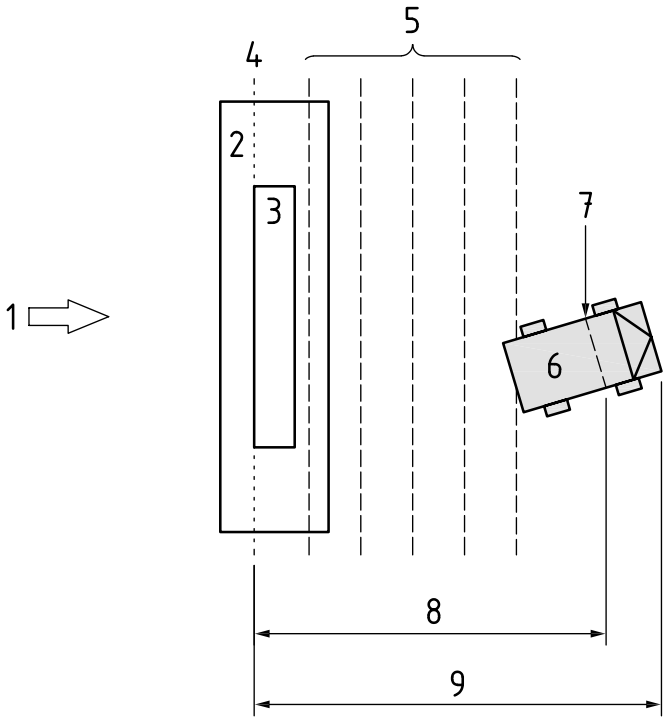

a) Impact at 90° to the VSB datum line, with < 90° yaw and/or pitch of the test vehicle

© ISO 2023 – All rights reserved
Documents
Document Sharing Hub
Full document details: BS ISO 22343-1:2023

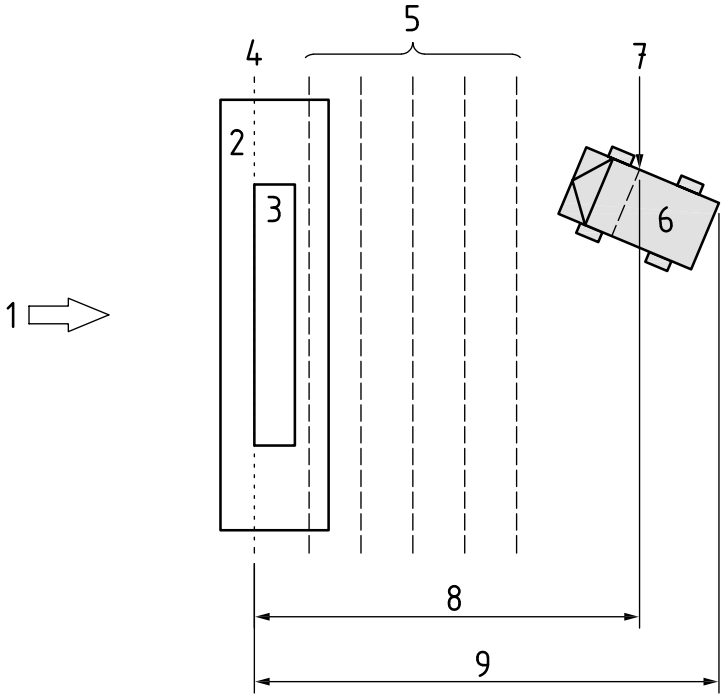

b) Impact at 90° to the VSB datum line, into a VSB with an angled impact face, with ≥ 90° yaw and/or pitch of the test vehicle (i.e. test vehicle facing towards the VSB post-impact)

Key

1 direction of impact
2 VSB foundation/test surface
3 VSB
4 VSB datum line
5 distance marks at ground level
6 test vehicle, post impact
7 vehicle datum point
8 vehicle penetration distance
9 VSB datum line to furthest part of vehicle (observation)

NOTE See Note 2 to 6.2 for distance marks for vehicle penetration.

Figure 5 — Vehicle penetration distance — Aerial views

© ISO 2023 – All rights reserved

Documents
Document Sharing Hub
Full document details: BS ISO 22343-1:2023

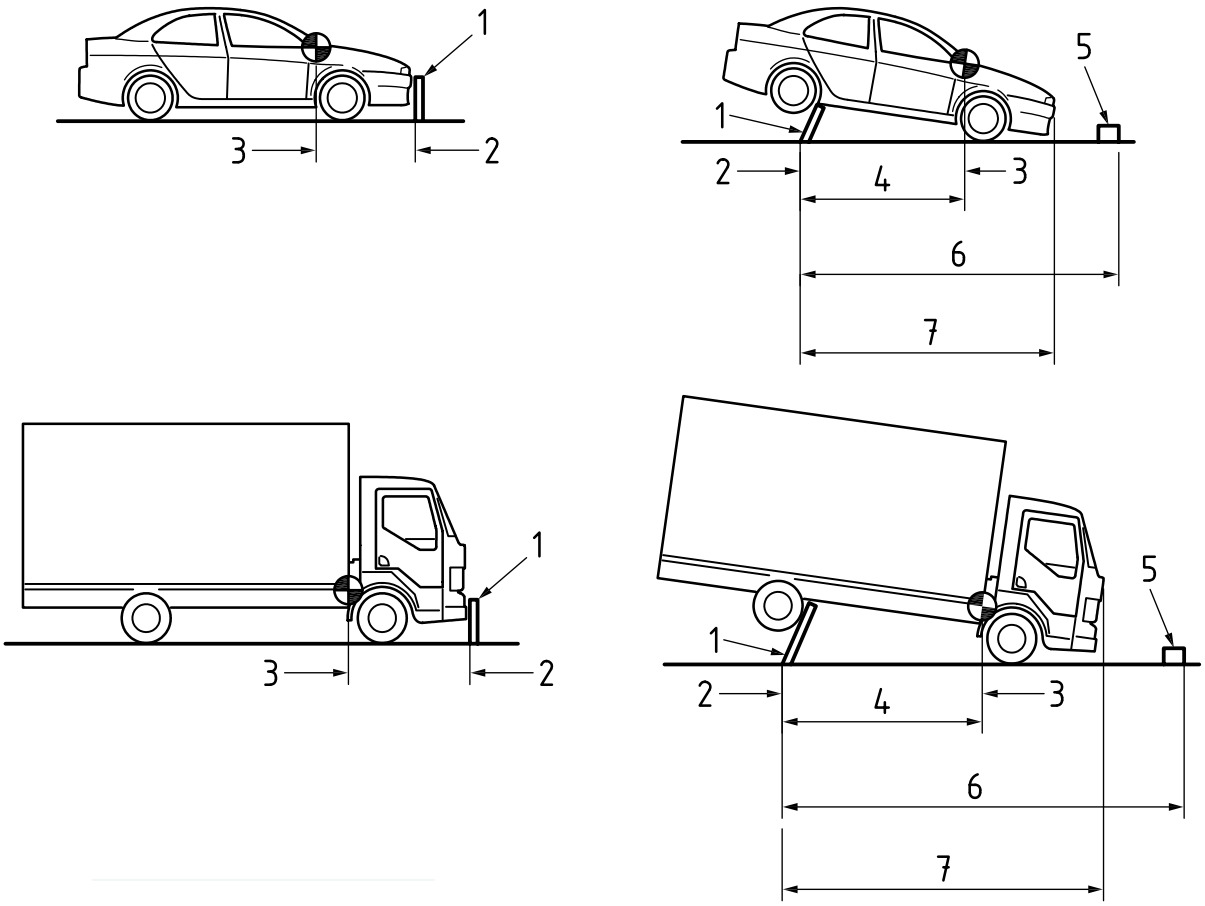

a) Pre-impact **b) Post-impact**

Key

1 VSB (e.g. bollard)
2 VSB datum line
3 vehicle datum point
4 vehicle penetration distance
5 major debris
6 major debris distance
7 VSB datum to furthest part of vehicle

Figure 6 — Vehicle penetration distance and major debris distance — Side views

3.6.2
major debris
piece of *vehicle security barrier (VSB)* (3.1), vehicle or *ballast* (3.3.2) with a mass of ≥2 kg that becomes totally detached during the vehicle-VSB *impact* (3.5)

3.6.3
major debris distance
dimension measured from and perpendicular to the *vehicle security barrier datum line* (3.4.2), to the furthest edge of the outermost piece of *major debris* (3.6.2)

Note 1 to entry: Major debris distance is illustrated for clarity in Figure 6.

3.6.4
major debris coordinates
position of *major debris* (3.6.2) measured in the x- and y-axes from either the *target impact point* (3.5.3) where the *impact angle* (3.5.2) is > 45°, or from the initial contact point where the impact angle is ≤ 45°

Note 1 to entry: Major debris coordinates are illustrated for clarity in Figure 7.

© ISO 2023 – All rights reserved
Documents
Document Sharing Hub
Full document details: BS ISO 22343-1:2023

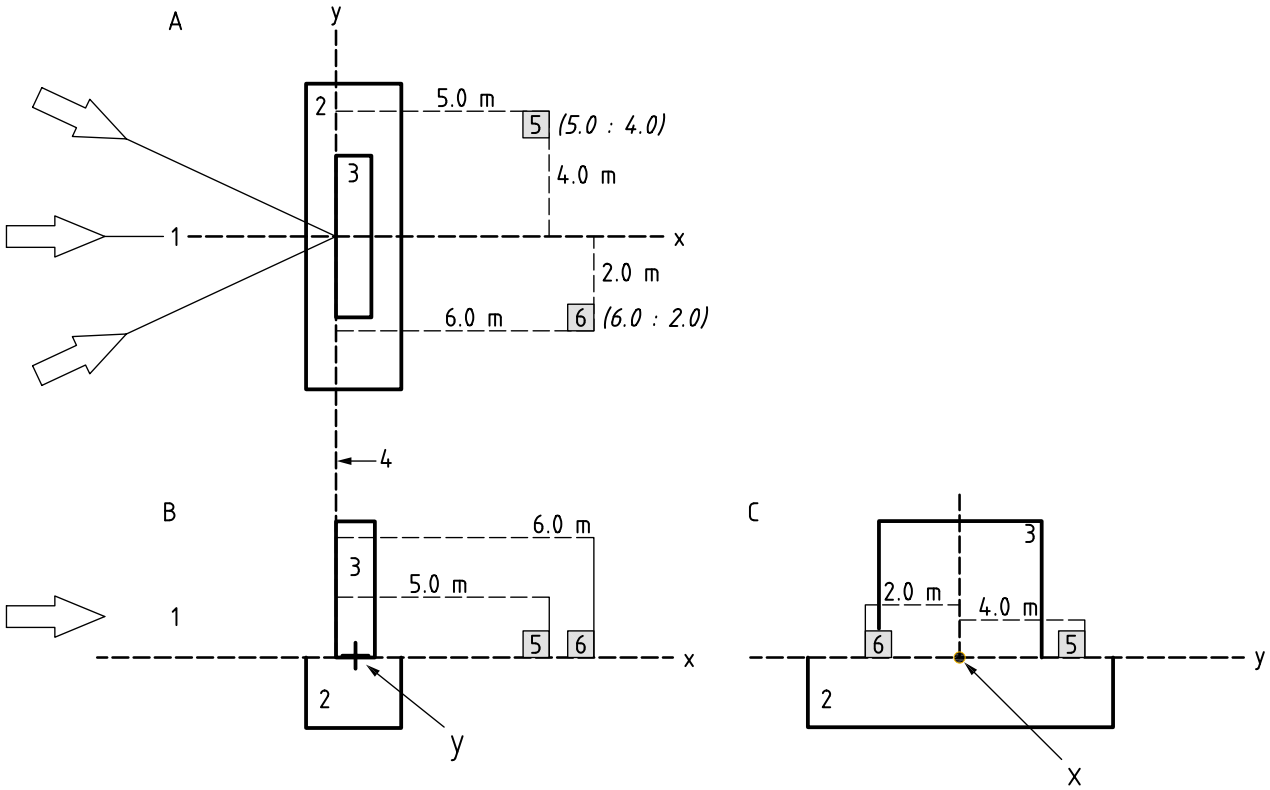

Key

A	aerial view	2	VSB foundation
B	side view – y is going into page (symbol +)	3	VSB
C	end view – x is coming out of page (symbol •)	4	VSB datum line
1	direction of impact (three examples)	5, 6	major debris and its coordinates

Figure 7 — Major debris coordinates system — Aerial, side and end views

3.7
client
person(s) or organization commissioning the *test house* (3.8) to undertake an *impact* (3.5) test

Note 1 to entry: The client can be, for example, the manufacturer, government agency, distributor, designer, prospective purchaser or installer of the vehicle security barrier to be tested.

3.8
test house
person(s) or organization carrying out the vehicle *impact* (3.5) test

4 VSB performance requirement

When tested in accordance with the test method in Clause 6, the VSB shall affect the test vehicle by:

a) preventing it from advancing beyond the VSB datum line; or

b) redirecting the vehicle such that it remains on the non-protected side of the VSB; or

c) bringing it to a halt beyond the VSB datum line (vehicle penetration).

© ISO 2023 – All rights reserved

Documents
Document Sharing Hub
Full document details: BS ISO 22343-1:2023